ARIZONA WATER ***COMPANY***

STANFIELD NITRATE AND ARSENIC REMOVAL FACILITY
STANFIELD, AZ
SPECIAL CONDITIONS
MARCH 25, 2026

CREATED BY: TL
REVIEWED BY: KSK

SITE DATA

System: Stanfield
Location: 36781 W Apache Drive, Stanfield, AZ

SPECIAL CONDITIONS

ONSITE PRE-BID MEETING

1. An onsite Pre-bid meeting will take place May 14, 2026 at 9:00 AM, attendance is not mandatory but is strongly recommended. Company may schedule other site visits upon request. Please call (520) 836-8785.
2. Any requests for information (RFI) will be due end of day May 14, 2026. Send all RFI to Theresa Lau at tlau@azwater.com and Ken Kalyta at kkalyta@azwater.com.

SITE OPERATIONS

1. Contractor must minimize interruption of service at the existing Stanfield Arsenic Removal Facility. All interruptions of service must be scheduled and agreed upon with Arizona Water Company project management.

2. Contractor must protect in place existing facilities except as noted in the drawings and specifications

GRANT CONDITIONS

1. This project is supported in part by funding by the U.S. Department of the Interior, Bureau of Reclamation WaterSMART Grant.

2. Contractor must comply with federal procurement and labor standards, including but not limited to Davis-Bacon prevailing wage requirements, Buy America/Build America requirements, and Equal Employment Opportunity and labor standards clauses in accordance with 2 CFR Part 200.

STANFIELD WELL NOS. 1 AND 3
ARSENIC AND NITRATE TREATMENT
TECHNICAL SPECIFICATIONS

Prepared for:

Arizona Water Company
3805 N Black Canyon Highway
Phoenix, AZ 85038

February 2026

Prepared by:

Consor North America, Inc
4747 North 22nd Street
Suite 200
Phoenix, AZ 85016

DARcor & Associates, Inc.
7600 North 16th Street
Suite 212
Phoenix, AZ 85020

GFT
3838 N Central Ave #1900
Phoenix, AZ 5012

Registered Professional Engineer (Civil)
CERTIFICATE NO. 53976
FREDERICK H. TACK
Date Signed 2.20.26
ARIZONA U.S.A.

Divisions 01, 02 09, 31, 33, 40, 43, 46
Frederick Tack, PE (Civil)

Divisions 26, 27
Jorge Gerardo, PE (Electrical)

Division 03 and 05
Stephanie Templeton, PE (Civil)

SECTION 01 10 00 – SUMMARY OF WORK

PART 1 GENERAL

1.1 SUMMARY

A. Section includes detailed description of the Work.

1.2 WORK COVERED BY CONTRACT DOCUMENTS

A. Project will be owned and operated by Arizona Water Company (COMPANY). Project has been designed in part by Consor North America, Inc., hereinafter called ENGINEER, is to act as COMPANY's representative in the interpretation of design intent, assume duties and responsibilities and have rights and authority assigned to ENGINEER in Contract Documents in connection with completion of Work in accordance with Contract Documents, and shall not be extended without written consent of COMPANY.

1.3 DEFINITIONS

A. COMPANY

1. As used in the Detailed Specification and used on Drawings is defined in Agreement

B. ENGINEER:

1. ENGINEER as used in the Detailed Specifications and on Drawings refers to Consor North America, Inc. and its Subconsultants.

2. As used in other documents is defined in COMPANY Specifications, including the following items:

   a. General Conditions of Contract: E-4-1.

   b. Construction Specifications: E-8-1.

   c. Standard Specification Drawings: E-9-1.

   d. EI&C Design Guidelines, Standard Details.

3. Resident Engineer and Resident Engineer Representative refers to ENGINEER or COMPANY assigned construction administrator, who shall assume the responsibility of construction administration activities, limited to shop drawing reviews, request for information, clarifications, progress observations, special inspections (reinforcement, concrete, coatings) and completion walk-throughs.

1.4 LOCATION OF THE PROJECT

A. The Project site is located across three (3) parcels, located in Section 20, Township 06 South, Range 04 East of the Gila and Salt River Baseline and Meridian, and are parceled as part of 127 total lots, recorded in Book/Cabinet 06; Page/Slide 017; Fee Number: 1978-004698 with the Pinal County Recorder. Project address is: 36781 W Apache Dr, Stanfield, AZ 85172.

1.5 SUMMARY OF WORK

A. The project consists of the following principal features:

1. The new treatment systems will include an "n+1" redundancy design approach for treatment reactors and pumping systems. Chemical storage and handling, process piping, and ancillary equipment will be provided to support the new treatment system, including but not limited to chemical dosing systems, online instrumentation, and Supervisory Control and Data Acquisition (SCADA) systems. These treatment facilities being designed include a nitrate treatment system and arsenic filtration systems and other improvements, consisting of the following:

   a. Phased demolition, salvage, and/or removal of the existing storage container, and IX system and components.

   b. One (1) Biological nitrate treatment system consisting of the following:

      1) Three (3) baffled 304SS tank with quiescent zone baffle and cascading aerator.

         a) Zero (0) to 120 rpm bioreactor mixer with dual 3-blade turbine impeller, each.

         b) Microvi MNE Denitrovi biocatalyst

      2) One (1) Process skid with:

         a) Online instrumentation includes two (2) nitrate analyzers, one (1) pH probe, one (1)DO, and one (1) chlorine analyzer.

   c. Intermediate Pump Station, consisting of:

      1) One (1) IPS tank

      2) Two (2) pumps

   d. Chemical storage and containment structure with

      1) Six (6) chemical feed assemblies with full redundancy.

      2) Chemical feed valving and piping/tuning.

      3) One (1) control system with PLC/HMI and Remote access.

   e. One (1) Coagulation filtration arsenic treatment system consisting of the following:

      1) Ten (10) 48-inch diameter pressure vessels.

      2) Feed water, backwash, and recycle pumps with variable frequency drive (VFD) control with pressure gauges, pressure, temperature, and flow transmitters.

      3) Online instrumentation including two turbidity analyzers and chlorine analyzer

      4) Actuated valves and control system to allow for automated backwashing and remote access monitoring.

f. Backwash system including backwash tank, recycle pumps and bag filter.

g. Sludge pump and system.

h. Two (2) dewatering Bins and two filtrate submersible pumps.

i. Connection to the existing raw water buried piping.

j. Connection to the existing storage tank and booster pump station piping.

k. Partial new perimeter chain link fence and gates.

l. Revision and grading improvements to the existing on-site retention basin and site drainage.

m. Other site improvements planned, will include the following:

1) New concrete pad, and ground stabilization for the new treatment systems, components, and connections.

n. Site piping to connect new systems to existing piping from existing wells, and to the existing booster pump station and storage tanks.

o. New perimeter fence and gate along the north and east property boundaries.

p. Grading and drainage improvements.

q. Testing, disinfection, startup and commissioning of all systems

1.6 JOB CONDITIONS:

A. Construction of the Project is as shown on the Drawings. Follow all requirements of all applicable permits.

B. Inform and schedule inspections by the COMPANY representatives during each step of excavation, backfill, compaction and other geotechnical operations. Request a copy of the geotechnical report and maintain a copy of the geotechnical report at the project site. The CONTACTOR will follow the requirements and recommendations outlined in the report.

C. Review geotechnical report regarding excavation. If Contractor requires additional information for excavation, Contractor will employ and pay for additional geotechnical investigation.

D. Contractor is required to visit job site prior to bidding.

E. Contractor will performed all work within the guidelines of all governing agencies such as, but not limited to, health department, OSHA, NFPA, Corps of Engineers, County, State and Federal regulatory agencies.

F. Contractor shall coordinate package plant installation activities including, but not limited to, scheduling, shop drawing processing, furnishing O&M manuals, check out and startup activities.

1.7 SITE ACCESS

A. General

1. Limit use of Project site for construction operations as indicated in Drawings and as indicated by requirements of this Section.

B. Use of Site

1. Do not disturb portions of Project site beyond areas in which the Work is indicated.

a. Driveways, Walkways and Entrances: Keep driveways, and entrances serving premises clear and available to COMPANY, COMPANY's employees, and emergency vehicles at all times. Do not use these areas for parking or storage of materials.

1) Schedule deliveries to minimize use of driveways and entrances by construction operations.

2) Schedule deliveries to minimize space and time requirements for storage of materials and equipment on-site.

1.8 SUBMITTALS

A. Project Schedule of Values.

B. Construction sequencing plan.

C. Staging area plan.

D. Preliminary Construction Schedule.

E. Monthly Cash Flow Projection.

1.9 FORM OF SPECIFICATIONS

A. Term "provide" or "provided" shall mean "Contractor shall furnish and install in-place". The Contractor will provide all items and/or services listed in these specifications unless explicitly noted.

B. In the event of conflict between these specifications and the Arizona Water Company specifications, the COMPANY General Conditions of Contract and Specifications shall prevail, unless directed otherwise by Change Order.

1.10 CONTRACTS

A. Contractor will perform all work under a maximum guaranteed price (GMP) contract.

B. Contractor is required to provide a schedule of values before the scheduled pre-construction conference.

C. Perform all work specified in this contract.

D. Restore project site and all work areas to original condition.

1.11 WORK BY OTHERS

A. Utility services

1. Contractor to coordinate with utility companies to ensure that services are installed as required.

2. Contractor to coordinate with utility companies and other contractor(s) adjacent to, or on the project site.

1.12 WORK COORDINATION

A. Schedule construction operations with minimum down time periods. All down time shall be coordinated with the Engineer at least 48 hours before scheduled down time.

B. Order equipment with long lead times as early as possible. Engineer shall provide expedited submittal review for such items.

C. Order equipment and materials required for early phases of the project as quickly as possible. Engineer shall provide expedited review for such items.

D. Do not modify existing facility operation and controls for Well No.1, Well No. 3 or the existing Ion Exchange Water Treatment Systems, unless otherwise directed by the Contract. The Contract documents includes the Construction Drawings and Technical Specifications, in addition to COMPANY standards and the Contract terms and conditions.

1.13 CONSTRUCTION SEQUENCE

A. Contractor shall review the following construction sequencing and incorporate sequencing into project schedule for review by Engineer and COMPANY. Minimize down time periods. Contractor has the final responsibility with respect to coordination with other subcontractors. The suggested sequence is generally described as follows:

1. Erect temporary fencing and construction controls.

2. Preliminary site grading including retention pond modifications.

3. Plan and relocate the two existing brine waste storage tanks, and re-plumb and confirm operation with the existing water treatment system.

4. Complete new pipe tie-ins to existing well pipe at facility entrance, and close valves in new piping to treatment facilities and components.

5. Complete underground piping and stub-ups, and test piping.

6. Complete on-site grading improvements and plant drain improvements.

7. Complete below grade electrical conduit installations and stub-ups.

8. Construct new pad footings and slab and equipment slabs, and tank pads.

9. Construction new chemical storage and handling footings and pads.

10. Place and anchor treatment reactor and vessels.

11. Place and anchor new tanks and equipment.

12. Install disinfection system, emergency eye-wash and shower, and backwash recycle pumping system.

13. Complete electrical and control work.

14. Complete site improvements and fine grading work.

15. Complete site perimeter fence and gate upgrades.

16. Complete site gravel and stabilization.

17. Perform system testing and disinfection.

18. Startup and commission new treatment systems.

1.14 INTERFERANCE

A. Minimize time interval and/or frequency any critical operation is out of service.

B. Contractor shall not block access to or interfere with the operation of the existing on-stie water fill station at any time, with out prior notification and written acceptance by COMPANY.

C. Notify COMPANY and Engineer of all interferences.

1.15 PARTIAL COMPANY OCCUPANCY

A. The Stanfield Water Facility is an active water production, treatment, storage, disinfection and distribution site.

B. COMPANY will occupy the Project site during entire period of construction for operation and maintenance.

C. COMPANY will have rights to enter project site at all times.

D. CONTRACTOR shall conduct all work to ensure least inconveniences to COMPANY and to the public.

E. Prior to partial COMPANY occupancy, the CONTRACTOR is to demonstrate mechanical and electrical systems are fully operational and all required inspections and tests have been successfully completed.

1.16 CONTRACTOR USE OF PREMISES

A. CONTRACTOR shall have use of project site for execution of work.

B. Keep driveways and all areas accessible to the COMPANY.

C. Use of the site will be under the sole direction of the COMPANY.

D. Obtain and pay for use of additional storage or work areas needed for operations at no additional costs to COMPANY.

E. Submit construction-staging plans for approval by COMPANY. Show location of alternate or off-site staging/storage areas.

F. The CONTRACTOR is to locate staging areas on-site. Off-site areas are the responsibility of the CONTRACTOR at no additional cost to the COMPANY.

1.17 COMPANY FURNISHED EQUIPMENT OR MATERIAL

A. NOT USED.

1.18 QUALITY ASSURANCE

A. Codes and Standards: Perform all work in compliance with all federal, state and local codes.

B. COMPANY will perform and execute COMPANY's General Conditions of Contract. Contractor shall assist COMPANY in collecting samples and other testing required by the COMPANY.

C. Contractor to be responsible for hiring geotechnical engineer for inspections during each step of excavation, backfill, compaction and other geotechnical operations

D. Contractor is responsible for providing all work tasks and procedures outlined in this construction document with or without reminders from the Engineer and/or COMPANY.

PART 2 PRODUCTS - NOT USED

PART 3 EXECUTION - NOT USED

END OF SECTION

THIS PAGE INTENTIONALLY LEFT BLANK

SECTION 01 33 00 - SUBMITTAL PROCEDURES

PART 1 GENERAL

1.1 SUMMARY

A. This Section contains administrative and procedural requirements for submittals review and information.

1.2 DEFINITIONS

A. Action Submittals

1. Written and graphic information and physical samples that require Engineer's responsive action.

B. Informational Submittals

1. Written and graphic information and physical Samples that do not require Engineer's responsive action. Submittals may be rejected for not complying with requirements.

1.3 SUBMITTAL PROCEDURES

A. Submit Drawings and Samples to Engineer for review in accordance with the accepted Schedule of Submittals.

B. Transmit each submittal with Engineer-accepted transmittal form certifying compliance with requirements of Contract Documents.

C. Sequentially number transmittal forms. Mark transmittal forms for resubmittals with original number and sequential alphabetic suffix.

D. Show each Submittal with the following numbering and tracking system:

1. Number submittals according to Section. For example, the first product submittal for Section 05 50 00 would be “05 50 00-1”. Resubmittals of that submittal would be “05 50 00-1.1”, followed by “05 50 00-1.2”, and so on. The second product submittal for that Section would be “05 50 00-2”.

2. Submittals containing product information from multiple Section will not be reviewed. Divide submittals in a manner that meets the numbering and tracking system requirements stated herein.

3. Alternative method of numbering may be used, if acceptable to Engineer.

E. Identify: Project, Contractor, subcontractor and supplier, pertinent drawing and detail number, and Section number appropriate to submittal.

F. Apply Contractor's stamp, signed or initialed, certifying that review, approval, verification of products required, field dimensions, adjacent construction Work, and coordination of information is according to requirements of the Work and Contract Documents.

G. Coordinate submission of related items.

1. Schedule drawings for interrelated items for submission at the same time.

2. The Engineer may hold drawings in cases where partial submission cannot be reviewed until the complete submission has been received or where drawings cannot be reviewed until correlated items affected by them have been received. When such drawings are held, the Engineer will advise the Contractor in writing that the shop drawing submitted will not be reviewed until drawings for related items have been received.

H. Electronic transmittals of submittals are provided by the Contractor. Provide electronic submittals in portable document format (PDF). Reviewed submittals will be returned to the Contractor as PDF electronic files.

I. For each submittal for review, allow not less than 14 days for Engineer review, excluding delivery time to and from Contractor.

J. Identify variations in Contract Documents and product or system limitations that may be detrimental to successful performance of completed Work.

K. Allow space on submittals for Contractor and Engineer review stamps or comments.

L. When revised for resubmission, identify changes made since previous submission. Provide a narrative of changes. Indicate that revisions were made on drawings or calculations.

M. Distribute copies of reviewed submittals as appropriate. Instruct parties to promptly report inability to comply with review comments.

N. Submittals not requested will not be recognized nor processed.

O. Incomplete Submittals

1. Engineer will not review. Complete submittals for each item are required. Delays resulting from incomplete submittals are not the responsibility of Engineer.

1.4 ENGINEER REVIEW

A. Informational submittals and other similar data are for Engineer's information, do not require Engineer's responsive action, and will not be reviewed or returned with comment.

B. Submittals made by Contractor that are not required by Contract Documents may be returned without action.

C. The Engineer will review the submitted data and drawings and return to the Contractor with notations thereon indicating "No Exception Taken", "Make Corrections Noted", "Rejected", "Revise and Resubmit", or "Submit Specified Item".

D. If more than two submissions of an item are required to meet the Project specifications, it is the responsibility of the Contractor for Engineer’s charges to COMPANY for its review time. COMPANY may impose a set-off against payments due to Contractor to secure reimbursement for such charges, unless the need for such change is beyond the control of Contractor.

1.5 RESUBMITTAL PROCEDURES

A. Make corrections required by Engineer and return the required number of corrected copies of Drawings and submit, as required, new Samples for review. Direct specific attention in writing to revisions other than the corrections called for by Engineer on previous submittals.

B. Furnish required submittals with sufficient information and accuracy to obtain required review of an item with no more than two submittals. Engineer will record Engineer's time for reviewing a third or subsequent submittal of a Drawings, sample, or other item requiring review, and the Contractor is responsible for Engineer's charges to COMPANY for such time. COMPANY may impose a set-off against payments due to Contractor to secure reimbursement for such charges.

C. If Contractor requests a change of a previously reviewed submittal item, the Contractor is responsible for Engineer's charges to COMPANY for its review time, and COMPANY may impose a set-off against payments due to Contractor to secure reimbursement for such charges, unless the need for such change is beyond the control of Contractor.

1.6 PRODUCT DATA

A. Submit to Engineer for review for assessing conformance with information given and design concept expressed in Contract Documents. Provide sufficient detail for determination of compliance with the Contract Documents.

B. Mark each copy to identify applicable products, models, options, and other data. Supplement Manufacturers' standard data to provide information specific to this Project.

1. Note submittal will be returned to Contractor without review of submittal if products, models, options, and other data are not clearly marked or identified.

C. Indicate product utility and electrical characteristics, utility connection requirements, and location of utility outlets for service for functional equipment and appliances.

D. After review, produce copies and distribute according to specified herein and for record documents.

1.7 DRAWINGS

A. Submit to Engineer for assessing conformance with information given and design concept expressed in Contract Documents.

B. Indicate special utility and electrical characteristics, utility connection requirements, and location of utility outlets for service for functional equipment and appliances.

C. When required by individual Sections, provide Drawings signed and sealed by a professional Engineer licensed in the state of Project, responsible for designing components shown on Drawings.

1. Include signed and sealed calculations to support design.

2. Submit Drawings and calculations in form suitable for submission to and approval by authorities having jurisdiction.

3. Make revisions and provide additional information when required by authorities having jurisdiction.

D. Provide scalable, dimensioned drawings as full-sized (22-inch x 34-inch) sheets and be able to print as scalable full-sized sheets.

E. After review, produce copies and distribute according to specified herein and for record documents.

1.8 SAMPLES

A. Submit to Engineer for assessing conformance with information given and design concept expressed in Contract Documents.

B. Samples for Selection as Specified in Product Sections:

1. Submit to Engineer for aesthetic, color, and finish selection.

2. Submit Samples of finishes, textures, and patterns for COMPANY selection.

C. Submit Samples to illustrate functional and aesthetic characteristics of products, with integral parts and attachment devices. Coordinate Sample submittals for interfacing work.

D. Include identification on each Sample, with full Project information.

E. Submit number of Samples specified in individual Sections; Engineer will retain one Sample.

F. Reviewed Samples that may be used in the Work are indicated in individual Sections.

G. After review, produce copies and distribute according to specified herein and for record documents.

1.9 DESIGN DATA

A. Submit data for Engineer's knowledge as Contract administrator or for COMPANY.

B. Submit information for assessing conformance with information given and design concept expressed in Contract Documents.

1.10 TEST REPORTS

A. Submit reports for Engineer's knowledge and records as Contract administrator or for COMPANY.

B. Submit test reports for information for assessing conformance with information given and design concept expressed in Contract Documents.

1.11 CERTIFICATES

A. Submit certification by Manufacturer, installation/application Subcontractor, or Contractor to Engineer, in quantities specified for Product Data.

B. Indicate material or product conforms to or exceeds specified requirements. Submit supporting reference data, affidavits, and certifications as appropriate.

C. Certificates may be recent or previous test results on material or product but must be acceptable to Engineer.

1.12 MANUFACTURER'S INSTRUCTIONS

A. Submit Manufacturer's installation instructions for Engineer's knowledge as Contract administrator or for COMPANY.

B. Submit printed instructions for delivery, storage, assembly, installation, startup, adjusting, and finishing, to Engineer in quantities specified for Product Data.

C. Indicate special procedures, perimeter conditions requiring special attention, and special environmental criteria required for application or installation.

1.13 MANUFACTURER'S FIELD REPORTS

A. Submit reports for Engineer's knowledge and records as Contract administrator or for COMPANY.

B. Submit report within 48 hours of observation to Engineer for information.

C. Submit reports for information for assessing conformance with information given and design concept expressed in Contract Documents.

1.14 ERECTION DRAWINGS

A. Submit Drawings for Engineer's knowledge and records as Contract administrator or for COMPANY.

B. Submit Drawings for information assessing conformance with information given and design concept expressed in Contract Documents.

C. Data indicating inappropriate or unacceptable Work may be subject to action by Engineer or COMPANY.

1.15 CONSTRUCTION PHOTOGRAPHS

A. Provide photographs of Site and construction throughout progress of Work produced by an experienced photographer acceptable to Engineer.

B. Each month submit photographs with Application for Payment.

C. Photographs: JPEG or PNG formats only.

PART 2 PRODUCTS – NOT USED

PART 3 EXECUTION - NOT USED

END OF SECTION

SECTION 02 41 00 - DEMOLITION

PART 1 GENERAL

1.1 SUMMARY

A. Section Includes:

1. Demolition and removal of existing facilities.

2. Abandoning and removing utilities.

B. Related Sections:

1. Section 31 05 16 - Aggregates for Earthwork

2. Section 31 22 13 - Rough Grading

1.2 SUBMITTALS

A. Section 01 33 00 - Submittal Procedures: Requirements for submittals.

B. Submit to Engineer a copy of written permission of private property owners, with copy of fill permit for said private property, as may be required for disposal of materials.

1.3 QUALITY ASSURANCE

A. Existing Conditions: Determine the extent of work required and limitations before proceeding with Work.

B. Conform to applicable local, state, and federal codes for environmental requirements in relation to disposal of debris.

1. Burning at the Site for the disposal of refuse, debris, and waste materials resulting from demolition and site clearing operations shall not be permitted.

C. Permits: The Contractor is responsible for obtaining all necessary permits required for completion of the Work described in this Section.

D. Protection of Persons and Property: Meet all federal, state, and local safety requirements for the protection of workmen, other persons, and property in the vicinity of the Work and requirements of the General Provisions.

E. If the existing material to be demolished and removed contains any hazardous materials which will require special handling upon removal, such as asbestos or lead, it is the responsibility of the Contractor to remove and dispose of the material in accordance with all applicable federal, state, and local regulations.

PART 2 PRODUCTS

2.1 MATERIALS

A. Existing Materials: All materials, equipment, miscellaneous items, and debris involved, occurring, or resulting from demolition, clearing, and grubbing work shall become the property of the Contractor at the place of origin, except as otherwise indicated in the Drawings or Specifications.

B. Crushed Rock: As specified in Section 31 05 16-2.1, Aggregates for Earthwork. Of the size shown in the Drawings or specified herein.

C. Sand: As specified in Section 31 05 16-2.2, Aggregates for Earthwork.

PART 3 EXECUTION

3.1 EXAMINATION

A. COMPANY assumes no responsibility for the actual condition of the facilities to be demolished. The Contractor shall visit the site, inspect all facilities and be familiar with all existing conditions and utilities.

B. Demolition drawings identify major equipment and structures to be demolished only. Auxiliary utilities such as water, air, chemicals, drainage, lubrication oil, hydraulic power fluid, electrical wiring, controls, and instrumentation are not necessarily shown shall be considered incidental to all demolition work.

C. Identify waste and salvage areas for placing removed materials.

3.2 PREPARATION

A. Carefully coordinate the work of this Section with all other work and construction.

B. Call Arizona 811, not less than two working days before performing Work.

1. Request underground utilities to be located and marked within and surrounding construction areas.

2. Disconnect or arrange for disconnection of utilities (if any) affected by required work.

3. Keep all active utilities intact and in continuous operations.

3.3 PROTECTION

A. Utilities: Locate, identify, and protect utilities located by utilities and indicated in the Drawings to remain from damage.

B. Survey control: Protect benchmarks, survey control points, and existing structures from damage or displacement.

C. Miscellaneous Site Features: Protect all existing miscellaneous site features from damage by excavating equipment and vehicular traffic, including but not limited to existing structures, fences, mailboxes, sidewalks, paving, guy wires, utility poles, and curbs.

D. Repair and Replacement:

1. Damaged items, including but not restricted to those noted above, shall be repaired, or replaced with new materials as required to restore damaged items or surfaces to a condition equal to and matching that existing prior to damage or start of Work of this contract.

2. Any damage to existing facilities or utilities to remain as caused by the Contractor's operations shall be repaired at the Contractor's expense.

3.4 DEMOLITIONS

A. Areas which are to be excavated for the purpose of demolition shall be cleared and stripped.

B. Carefully consider all bearing loads and capacities for placement of equipment and material on site. In the event of any questions as to whether an area to be loaded has adequate bearing capacity, consult with Engineer prior to the placement of such equipment or material.

C. Demolition of Existing Structures:

1. Excavate around existing structures as required to perform demolition operations and to plug associated existing pipelines where shown in the Drawing.

2. Provide shoring, bracing, and supports, as required, to ensure adjacent structures are not damaged and structural elements of existing structure are not overloaded during demolition activities.

a. Increase structural supports or adding new supports as may be required as a result of any cutting, removal, or demolition work performed under any part of this Contract.

b. Remove all temporary protection when the Work is complete or when so authorized by the Engineer.

3. Any floors that are to remain in place shall be completely cracked through to allow for drainage. Cracking shall be accomplished by dropping a demolition ball or by other methods approved by the Engineer.

4. Remove and dispose of all exposed and/or protruding metalwork, piping, plumbing, and conduits resulting from demolition activities, and all woodwork, roofing, and electrical and mechanical equipment removed from demolished structures.

a. Reinforcing bars shall be cut flush with final wall elevations as shown in the Drawings.

b. No detached metalwork, excluding concrete reinforcing bars, shall be buried with the concrete and masonry rubble.

D. Backfill at Demolished Structures:

1. For structures designated to be abandoned and/or demolished in place, concrete and/or masonry rubble and excavated soils resulting from demolition activities shall be used for backfill or placed in the bottoms of said structures only as directed by the Engineer.

2. Concrete and masonry rubble used for backfilling shall be broken into pieces no larger than 12 inches on any one side.

3. Materials resulting from abandonment/demolition activities approved for backfill shall be combined with imported filler sand to create a dense, compacted backfill.

4. Backfilling or placement of the excavated material in the structures shall meet the following requirements.

    a. Furnish, place and compact filler sand along with the concrete and masonry rubble so that all voids are filled and a dense, compacted backfill is obtained.

    b. Filler sand shall be placed in horizontal layers completely filling all voids between pieces of rubble and not exceeding 12 inches in thickness.

    c. Each layer of filler sand shall be compacted to obtain at least 90 percent of maximum density as determined by ASTM Method D-698-78 (AASHTO T-99).

    d. Water shall be furnished by the Contractor and added to each layer as required to maintain optimum moisture content.

    e. The amount of filler sand used shall only be the amount needed to fill all voids created by placement of the concrete and asphalt rubble, as directed by the Engineer.

    f. At locations where concrete and masonry rubble are used for backfill, they shall be placed such that a minimum of 3 feet of compacted non-rubble backfill material (crushed rock) exists between any rubble and finished grade. Protruding reinforcing bars shall be cut to lengths that allow granular backfill to be placed and compacted to required levels in and above the rubble.

5. Disposal of all materials not used for backfill shall be performed off-site and in compliance with applicable local, state, and federal codes and requirements.

6. In areas where new construction will take place, no trace of these structures shall remain prior to placing of backfill.

E. Backfilling within the footprint of new structures with rubble material resulting from demolition activities will not be allowed.

F. All existing improvements designated in the Drawings or specified to be removed, including but not limited to structures, pipelines, walls, footings, foundations, slabs, pavements, curbs, fencing, and similar structures occurring above, at, or below existing ground surface shall be included in the demolition work.

G. Unless otherwise specified, any resulting voids shall be backfilled with suitable excavated or imported material compacted to the density of the adjacent soil.

3.5 EXISTING WATER UTILITY PIPING ABANDONMENT – NOT USED

3.6 ELECTRICAL AND CONTROL SYSTEM DEMOLITION

A. All electrical and control system demolition work shall at all times be conducted in a safe and proper manner to avoid injury from electrical shock to all personnel.

1. Electrical equipment to be shut off for a period of time shall be tagged, locked out, and sealed with a crimped wire and lead seal and made inoperable.

2. At no time shall live electrical wiring or connections or those which can become energized be accessible to any persons without suitable protection or warning signs.

3.7 PERMANENT ABANDONMENT OF WELLS – NOT USED

3.8 ASPHALTIC CONCRETE DEMOLITION – NOT USED

3.9 REMOVAL

A. Remove debris, rock, excavated materials, rubble, abandoned piping, and extracted plant life resulting from abandonment and/or demolition activities from site.

B. Continuously clean-up and remove waste materials from site. Do not allow materials to accumulate on site.

C. Removal: All material resulting from demolition, clearing, and grubbing, and trimming operations shall be removed from the Project Site and disposed of in a lawful manner. Materials placed on property of private property owners shall be by written permission only.

3.10 GRADING

A. All grading work shall be completed in accordance with Section 31 22 13, Rough Grading.

3.11 CLEANUP

A. During and upon completion of work, promptly remove all unused tools and equipment, surplus materials, debris, and dust and leave all areas affected by the work in a clean, condition, as may be subject to Engineer approval.

B. Adjacent structures shall be cleaned of dust, dirt, and debris resulting from demolition.

C. Adjacent areas shall be returned to their existing condition prior to the start of work.

3.12 SCHEDULES

A. The following structures are to be demolished and removed from the Project Site:

1. Storage container.

2. North and northeast chain-link fence and gates.

3. Select equipment pads as shown on the drawings.

B. Protect the following structures during construction operations:

1. Brine maker/salt tank.
2. IX treatment system container.
3. Well No. 1.
4. 100,000 gallon water storage tank.
5. 20,000 gallon water storage tank.
6. 5,000 gallon hydro tank.
7. Pump Station.
8. Chlorine shed.
9. Fill station.
10. Retention basin.
11. East, west, and south chain-link fencing and gates.

C. Relocate the following structures prior to starting construction operations:

1. Brine waste tanks.

END OF SECTION

SECTION 02 25 00 – SITE PREPARATION

PART 1 GENERAL

1.1 SUMMARY

A. Section Includes:

1. Removing existing trees, shrubs, ground cover, plants, and grass in improvement area only.
2. Clearing and grubbing in improvement area only.
3. Temporary erosion and sedimentation control measures.

B. Related Sections:

1. Section 31 22 13 - Rough Grading

1.2 SUBMITTALS

A. Section 01 33 00 - Submittal Procedures: Requirements for submittals.

B. Submit to Engineer a copy of written permission of private property owners, with copy of fill permit for said private property, as may be required for disposal of materials.

1.3 MATERIAL OWNERSHIP

A. Except for materials indicated to remain COMPANY's property, cleared materials shall become Contractor's property and removed from Project site.

1.4 SUBMITTALS

A. Photographs or videotape, sufficiently detailed, of existing conditions of trees and plantings, adjoining construction, and site improvements that might be misconstrued as damage caused by site clearing.

1.5 PROJECT CONDITIONS

A. Traffic: Minimize interference with adjoining roads, streets, walks, and other adjacent occupied or used facilities during site-clearing operations.

1. Do not close or obstruct streets, walks, or other adjacent occupied or used facilities without permission from COMPANY and authorities having jurisdiction.
2. Provide alternate routes around closed or obstructed traffic ways if required by authorities having jurisdiction.
3. Notify adjacent property owners as directed by the ENGINEER.

B. Do not commence site-clearing operations until temporary erosion and sedimentation control measures are in place.

C. Protection:

1. Streets, roads, adjacent property and other works and structures. CONTRACTOR shall return to original condition, satisfactory to the ENGINEER, damaged facilities caused by CONTRACTOR'S operations.

D. Control air pollution caused by dust and dirt in accordance with all local agency and County regulations.

PART 2 PART 2 PRODUCTS

2.1 (NOT USED)

2.2

PART 3 PART 3 EXECUTION

3.1 PREPARATION

A. Protect and maintain benchmarks and survey control points from disturbance during construction.

B. CONTRACTOR shall Aadhere to the requirements of all local, county and federal regulations regarding existing vegetation. Perform landscape inventory as needed and identify protected species.

C. CONTRACTOR shall obtain all necessary site permits, including but not limited to the following:

1. Dust control permits

2. Local and other agency permits

D. In the event of limited construction space, CONTRACTOR shall be required to haul materials to and from the construction site as needed, at no additional cost to the COMPANY.

E. Any demolition shown on the plans shall be included in the lump sum cost. CONTRACTOR shall cCoordinate all utility terminations and/or relocations as needed.

3.2 TEMPORARY EROSION AND SEDIMENTATION CONTROL

A. Provide temporary erosion and sedimentation control measures to prevent soil erosion and discharge of soil-bearing water runoff or airborne dust to adjacent properties according to requirements of authorities having jurisdiction.

B. Inspect, repair, and maintain erosion and sedimentation control measures during construction until permanent vegetation ground cover has been established.

C. Remove erosion and sedimentation controls and restore and stabilize areas disturbed during removal.

3.3 CLEARING AND GRUBBING

A. Limits of clearing shall be all areas within the Contract limit lines, except as otherwise shown on the Drawings. Damage outside these limits caused by CONTRACTOR's operations shall be corrected at CONTRACTOR's expense.

B. Fill depressions caused by clearing and grubbing operations with satisfactory soil material unless further excavation or earthwork is indicated.

1. Place fill material in horizontal layers not exceeding a loose depth of 8- inches, and compact each layer to the density required by the ENGINEER.

2. The CONTRACTOR is not to use cleared or grubbed material as backfills or structural embankments.

3.4 TOPSOIL REMOVAL

A. Topsoil is defined as friable clay loam surface soil found in a depth of not less than 4- inches. Topsoil shall be substantially free of subsoil, clay lumps, stones, and other objects over 2-inches in diameter, and without weeds, roots, and other objectionable material.

B. Strip topsoil which is satisfactory to whatever depths are encountered, and in such manner as to prevent intermingling with the underlying subsoil or other objectionable material.

C. Dispose of excess topsoil as waste material off site at the expense of the CONTRACTOR.

3.5 DISPOSAL

A. Disposal: Remove surplus soil material, unsuitable topsoil, obstructions, demolished materials, and waste materials including trash and debris, and legally dispose of them off COMPANY's property.

1. Burning on the site is not permitted.

END OF SECTION

Page left intentionally blank.

SECTION 036000

GROUT

PART 1 – GENERAL

1.1 DESCRIPTION

A. Scope:
   1. CONTRACTOR shall provide all labor, materials, equipment, and incidentals as shown, specified, and required to furnish and install grout and perform grouting Work.

B. Coordination:
   1. Review installation procedures under this and other Sections and coordinate installation of items to be installed with or before grouting Work.
   2. Notify other contractors in advance of grouting to provide other contractors with sufficient time for installing items included in their contracts to be installed with or before grouting Work.

C. Related Sections:
   1. Section 031000, Concrete Forms and Accessories.
   2. Section 033000, Cast-In-Place Concrete.

D. Application and Grout Material:
   1. The following is a listing of grouting applications and the corresponding type of grout material to be provided for the associated application. Unless shown or indicated otherwise in the Contract Documents, provide grout in accordance with the following:

TABLE 03600-A, GROUT APPLICATIONS AND MATERIAL TYPES

Application	Required Grout Material Type
Beam and column base bearing less than 16 inches in the least dimension	Class II Non-Shrink
Column base plates	Class I Non-Shrink
Base plates for storage tanks and other non-motorized equipment, and motorized equipment or machinery less than 50 horsepower	Class I Non-Shrink (unless otherwise recommended by equipment manufacturer)
Motorized equipment or machinery equal to and greater than 50 horsepower, and motorized equipment or machinery equipment less than 50 horsepower subject to severe shock loads or high vibration	Class III Non-Shrink Epoxy (unless otherwise recommended by equipment manufacturer)

Application	Required Grout Material Type
Filling blockout spaces for embedded items such as railing posts, guide frames for hydraulic gates, and similar applications	Class II Non-Shrink (Class I where placement time exceeds 15 minutes)
Grout fill or grout toppings less than four inches thick	Grout Fill
Grout fill greater than four inches thick	Class "B" Concrete in accordance with Section 033000, Cast-In-Place Concrete
Grout for setting filter underdrain blocks, and for filling voids between filter underdrain blocks, and for filling voids between filter underdrain blocks and walls	Filter Underdrain Blocks Grout
Applications not listed above, where grout is indicated on the Drawings	Class I Non-Shrink, unless shown or indicated otherwise

1.2 REFERENCES

A. Standards referenced in this Section are:
   1. ACI 211.1, Practice for Selecting Proportions for Normal, Heavyweight, and Mass Concrete.
   2. ACI 301, Structural Concrete for Buildings.
   3. ASTM C33/C33M, Specification for Concrete Aggregates.
   4. ASTM C109/C109M, Test Method for Compressive Strength of Hydraulic Cement Mortars (Using 2-in. or [50-mm] Cube Specimens).
   5. ASTM C230/C230M, Specification for Flow Table for Use in Tests of Hydraulic Cement.
   6. ASTM C531, Test Method for Linear Shrinkage and Coefficient of Thermal Expansion of Chemical-Resistant Mortars, Grouts, Monolithic Surfacings, and Polymer Concretes.
   7. ASTM C579, Test Methods for Compressive Strength of Chemical-Resistant Mortars, Grouts, Monolithic Surfacings, and Polymer Concretes.
   8. ASTM C827, Test Method for Change in Height at Early Ages of Cylindrical Specimens of Cementitious Mixtures.
   9. ASTM C882/C882M, Test Method for Bond Strength of Epoxy-Resin Systems Used With Concrete By Slant Shear.
   10. ASTM C939, Text Method for Flow of Grout for Preplaced-Aggregate Concrete (Flow Cone Method).
   11. ASTM C1107/C1107M, Specification for Packaged Dry, Hydraulic-Cement Grout (Nonshrink).
   12. ASTM C1181, Test Methods for Compressive Creep of Chemical-Resistant Polymer Machinery Grouts.
   13. NSF/ANSI 61, Drinking Water System Components - Health Effects.

1.3 QUALITY ASSURANCE

A. Qualifications:
   1. Grout Testing Laboratory:
      a. Independent testing laboratory employed for design and testing of grout materials and mixes shall comply with testing laboratory requirements in Section 033000, Cast-in-Place Concrete and other applicable requirements in the Contract Documents.
   2. Manufacturer: Shall have a minimum of five years experience of producing products substantially similar to that required and shall be able to submit documentation of at least five satisfactory installations that have been in successful operation for at least five years each.
   3. Manufacturer's Field Service Technician: When required, provide services of manufacturer's full-time employee, factory-trained in handling, use, and installing the products required, with at least five years of experience in field applications of the products required.

B. Trial Batch:
   1. Each grout fill and construction joint grout mix proportion and design shall be verified by laboratory trial batch or field experience methods. Comply with ACI 211.1 and submit to ENGINEER a report with the following data:
      a. Complete identification of aggregate source of supply.
      b. Tests of aggregates for compliance with specified requirements.
      c. Scale weight of each aggregate.
      d. Absorbed water in each aggregate.
      e. Brand, type, and composition of cement.
      f. Brand, type, and amount of each admixture.
      g. Amounts of water used in trial mixes.
      h. Proportions of each material per cubic yard.
      i. Unit weight and yield per cubic yard of trial mixtures.
      j. Measured slump.
      k. Measured air content.
      l. Compressive strength developed at seven days and 28 days, from not less than three test specimens cast for each seven-day and 28-day test, and for each design mix.
   2. Laboratory Trial Batches: When laboratory trial batches are used to select grout proportions, prepare test specimens and conduct strength tests as specified in ACI 301.
   3. Field Experience Method: When field experience methods are used to select grout proportions, establish proportions as specified in ACI 301.

1.4 SUBMITTALS

A. Action Submittals: Submit the following:
   1. Shop Drawings:
      a. Schedule of Project-specific grout applications, installation locations, and the grout type proposed for each.
      b. List of grout materials and proportions for the proposed mix designs. Include data sheets, test results, certifications, and mill reports to qualify the materials proposed for use in the mix designs. Do not start laboratory trial batch testing until submittal is approved by ENGINEER.
      c. Trial Batch Reports: Submit laboratory test reports for grout materials and mix design tests.
   2. Product Data:
      a. Data sheets, certifications, and manufacturer's specifications for all materials proposed for use.

B. Informational Submittals: Submit the following:
   1. Manufacturer's Instructions:
      a. Special instructions for shipping, storing, protecting, and handling.
      b. Installation instructions for the materials.
   2. Field Quality Control Submittals:
      a. Report field testing results for each required time period. (e.g., seven-day tests, 28-day tests). Submit within 24 hours after completion of associated test. Each test report shall include results of all testing required at time of sampling.
   3. Supplier Reports:
      a. Submit written report of results of each visit to Site by Supplier's field service technician, including purpose and time of visit, tasks performed, and results obtained. Submit within two days of completion of visit to the Site.
   4. Qualifications Statements:
      a. Testing laboratory, when not submitted under other Sections.
      b. Manufacturer, when submittal of qualifications is required by ENGINEER.
      c. Manufacturer's field service technician, when submittal of qualifications is required by ENGINEER.

1.5 PRODUCT DELIVERY, STORAGE AND HANDLING

A. Storage of Materials: Store grout materials in a dry location, protected from weather and protected from moisture.

PART 2 – PRODUCTS

2.1 GENERAL

A. All grout materials, admixtures, cementitious materials, and other materials used in grout that contact potable water or water that will be treated to become potable shall be listed in NSF/ANSI 61.

2.2 NON-SHRINK GROUT MATERIALS

A. General: Non-shrink grout shall be a prepackaged, inorganic, flowable, non-gas-liberating, non-metallic, cement-based grout requiring only the addition of water. Manufacturer's instructions shall be printed on each bag or container in which the materials are packaged. Specific formulation for each type or class of non-shrink grout specified in this Section shall be that recommended by the grout manufacturer for the particular application.

B. Class I Non-Shrink Grout:
   1. Class I non-shrink grouts shall have a minimum 28-day compressive strength of 7,000 psi. Use grout for precision grouting and where water-tightness and non-shrink reliability in both plastic and hardened states is critical, in accordance with Table 03600-A in this Section.
   2. Products and Manufacturer: Provide one of the following:
      a. Masterflow 928, by Master Builders, Inc.
      b. Five Star Grout, by Five Star Products, Inc.
      c. Hi-Flow Grout, by Euclid Chemical Company.
      d. Or equal.
   3. Comply with ASTM C1107/C1107M, Grade C and B (as modified below) when tested using amount of water required to achieve the following properties:
      a. Fluid consistency (20 to 30 seconds) shall be in accordance with ASTM C939.
      b. At temperatures of 45, 73.4, and 95 degrees F.
   4. Length change from placing to time of final set shall not have shrinkage greater than the expansion measured at three or fourteen days. Expansion at three or fourteen days shall not exceed the 28-day expansion.
   5. Non-shrink property shall not be based on chemically-generated gas or gypsum expansion.
   6. Fluid grout shall pass through the flow cone, with continuous flow, one hour after mixing.

C. Class II Non-Shrink Grout:
   1. Class II non-shrink grouts shall have minimum 28-day compressive strength of 7,000 psi. Use grout for general-purpose grouting applications in accordance with Table 03600-A in this Section.
   2. Products and Manufacturer: Provide one of the following:
      a. Construction Grout, by Master Builders, Inc.
      b. FSP Construction Grout, by Five Star Products, Inc.

c. NS Grout, by Euclid Chemical Company.
d. Or equal.

3. Comply with ASTM C1107/C1107M and the following when tested using the quantity of water required to achieve the following properties:
   a. Flowable consistency (140 percent flow in accordance with ASTM C230/C230M, five drops in 30 seconds).
   b. Fluid working time of at least 15 minutes.
   c. Flowable for at least 30 minutes.
4. When tested, grout shall not bleed at maximum allowed water.
5. Non-shrink property shall not be based on chemically-generated gas or gypsum expansion.

D. Class III Non-Shrink Epoxy Grout:
1. Epoxy grout shall be a pourable, non-shrink, 100-percent solids system.
2. Products and Manufacturer: Provide one of the following:
   a. E3G, by Euclid Chemical Company.
   b. Sikadur 42 Grout Pak, by Sika Corporation.
   c. HP Epoxy Grout, by Five Star Products, Inc.
   d. Or equal.
3. Epoxy grout system shall have three components: resin, hardener, and specially blended aggregate, all pre-measured and prepackaged. Resin component shall not contain non-reactive diluents. Resins containing butyl glycidyl ether (BGE) or other highly volatile and hazardous reactive diluents are unacceptable. Variation of component ratios is not allowed without specific recommendation by manufacturer. Manufacturer's instructions shall be printed on each container in which products are packaged.
4. The following properties shall be attained with the minimum quantity of aggregate allowed by epoxy grout manufacturer.
   a. Vertical volume change at all times before hardening shall be between zero percent shrinkage and 4.0 percent expansion when measured in accordance with ASTM C827 (modified for epoxy grouts by using an indicator ball with specific gravity between 0.9 and 1.1).
   b. Length change after hardening shall be less than 0.0006-inch per inch and coefficient of thermal expansion shall be less than 0.00003-inch per inch per degree F when tested in accordance with ASTM C531.
   c. Compressive creep at one year shall be less than 0.001-inch per inch when tested under a 400-psi constant load at 140 degrees F in accordance with ASTM C1181.
   d. Minimum seven-day compressive strength shall be 14,000 psi when tested in accordance with ASTM C579
   e. Grout shall be capable of maintaining at least a flowable consistency for minimum of 30 minutes at 70 degrees F.
   f. Shear bond strength to portland cement concrete shall be greater than shear strength of concrete when tested in accordance with ASTM C882/C882M.
   g. Minimum effective bearing area shall be 95 percent.

2.3 GROUT MATERIALS OTHER THAN NON-SHRINK GROUT

A. General: Materials for grouts (other than non-shrink grouts) shall be in accordance with Section 033000, Cast-In-Place Concrete, except as otherwise specified in this Section.

B. Grout Fill:
   1. Grout fill shall be comprised of cement, fine aggregate, coarse aggregate, water, and admixtures proportioned and mixed in accordance with this Section.
      a. Minimum Compressive Strength: 5,000 psi at 28 days.
      b. Maximum Water-Cement Ratio: 0.45 by weight.
      c. Coarse Aggregate: ASTM C33/C33M, No. 8 size.
      d. Fine Aggregate: ASTM C33/C33M, approximately 60 percent by weight of total aggregate.
      e. Air Content: Seven percent (plus or minus one percent).
      f. Minimum Cement Content: 564 pounds per cubic yard.
      g. Slump for grout fill shall be adjusted to match placing and finishing conditions, and shall not exceed four inches.

C. Construction Joint Grout:
   1. Construction joint grout shall be comprised of cement, fine aggregate, coarse aggregate, water, and admixtures proportioned with similar cementitious characteristics as Class "A" concrete specified in Section 03300, Cast-In-Place Concrete. Mix design shall result in grout that is flowable with high mortar content. Mix requirements are:
      a. Minimum Compressive Strength: 4,500 psi at 28 days.
      b. Maximum Water-Cement Ratio: 0.42 by weight.
      c. Coarse Aggregate: ASTM C33/C33M, No. 8 size.
      d. Fine Aggregate: ASTM C33/C33M, approximately 60 percent by weight of total aggregate.
      e. Air Content: Seven percent (plus or minus one percent).
      f. Minimum Cement Content: 752 pounds per cubic yard.
      g. Slump for Construction Joint Grout: Seven inches (plus or minute one inch).

D. Filter Underdrain Blocks Grout:
   1. Grout shall comply with Article 2.1 of this Section. Grout shall consist of one part cement to two parts sand with shrinkage-reducing admixture. Class I or Class II non-shrink grout may be used in lieu of filter underdrain blocks grout.
      a. Minimum Compressive Strength: 4,000 psi at 28 days.
      b. Maximum Water-Cement Ratio: 0.45 by weight.

2.4 CURING MATERIALS

A. Curing materials shall comply with Section 033000, Cast-in-Place Concrete, and shall be as recommended by the manufacturer of prepackaged grouts.

PART 3 – EXECUTION

3.1 INSPECTION

A. Examine substrate and conditions under which grouting will be performed and notify ENGINEER in writing of unsatisfactory conditions. Do not proceed with the Work until unsatisfactory conditions are corrected.

3.2 INSTALLATION

A. General:
   1. Place grout as shown and indicated, and in accordance with Laws and Regulations and grout manufacturer's instructions. If manufacturer's instructions conflict with the Contract Documents, obtain clarification or interpretation from ENGINEER before proceeding.
   2. Consistency of non-shrink grouts shall be as required to completely fill the space to be grouted for the particular application. Do not install grout for dry-packing without approval of ENGINEER. When dry-packing is approved by ENGINEER, dry-pack consistency shall be such that grout has sufficient water to ensure hydration and grout strength development, and remains plastic, moldable, and that does not flow.
   3. Grouting shall comply with temperature and weather limitations in Section 033000, Cast-In-Place Concrete.
   4. Cure grout in accordance with grout manufacturer’s instructions for prepackaged grout and Section 033000, Cast-In-Place Concrete, for grout fill.

B. Columns and Beams:
   1. After shimming columns and beams to proper elevation, securely tighten anchors. Properly form around base plates allowing sufficient room around edges for placing grout. Provide adequate depth between bottom of base plate and top of concrete base to assure that void is completely filled with non-shrink grout.

C. Equipment Bases:
   1. Install equipment in accordance with manufacturer’s recommendations, Laws, and Regulations, and the Contract Documents. After shimming equipment to proper elevation, securely tighten anchors. Properly form around base plates, allowing sufficient room around edges for placing grout. Provide adequate depth between bottom of equipment base and top of concrete base to ensure that voids are completely filled with non-shrink grout.

D. Handrail Posts:
   1. After posts have been properly inserted into holes or sleeves, fill annular space between posts and sleeve with non-shrink grout. Bevel grout at juncture with post so that water will flow away from post.

E. Construction Joints:
   1. Place a six-inch minimum thick layer of construction joint grout over contact surface of concrete at interface of horizontal construction joints in accordance with Section 031000, Concrete Forms and Accessories, and Section 033000, Cast-In-Place Concrete.

F. Grout Fill:
   1. All mechanical, electrical, and finish work shall be completed prior to placing grout fill. Base slab shall be provided with a scratched finish in accordance with Section 033000, Cast-In-Place Concrete. Roughen existing slabs shall by abrasive blasting or hydroblasting exposing aggregates to ensure bonding to base slab.
   2. Minimum thickness of grout fill shall be one-inch. Where finished surface of grout fill is to form an intersecting angle of less than 45 degrees with concrete surface against which grout will be placed, form a key in the concrete surface at the intersection point. Key shall be minimum of 3.5 inches wide by 1.5 inches deep.
   3. Thoroughly clean and wet base slab prior to placing grout fill. Do not place grout fill until slab is completely free of standing water. A thin coat of neat Type II cement slurry shall be broomed into surface of slab. Place grout fill while slurry is wet. Grout fill shall be compacted by rolling or tamping, brought to elevation, and floated. In tanks and basins where scraping-type equipment will be installed, grout fill shall be screeded by blades attached to revolving mechanism of equipment in accordance with procedures recommended by equipment manufacturer after grout is brought to elevation.
   4. Grout fill placed on sloping slabs shall be installed uniformly from bottom of slab to top, for full width of placement.
   5. Test grout fill surface with a straight edge to detect high and low spots; immediately correct high and low spots in grout fill. When grout fill has hardened sufficiently, grout fill shall be steel troweled to provide a smooth surface free of bug holes and other imperfections. While an acceptable type of mechanical trowel may be used in this operation, the last pass over the grout fill surface shall be by hand-troweling. During finishing, do not apply the following to the grout fill surface: water, dry cement, or mixture of dry cement and sand.
   6. Cure and protect grout fill in accordance with Section 033000, Cast-In-Place Concrete.

3.3 FIELD QUALITY CONTROL

A. Field Testing Services:
   1. OWNER will employ testing laboratory to perform field quality control testing for grout. ENGINEER will direct the testing requirements.
   2. CONTRACTOR shall provide all curing and necessary cube storage.

B. Field Testing Services:
   1. CONTRACTOR shall employ an independent testing laboratory to perform field quality control testing for grout. ENGINEER will direct where samples are to be obtained.
   2. CONTRACTOR shall provide all curing and necessary cube storage.
   3. Comply with testing laboratory requirements in Section 033000, Cast-In-Place Concrete for required testing laboratory qualifications.

C. Quality Control Testing During Construction:
   1. Grout Fill: Perform sampling and testing for field quality control during grout fill placing as follows:
      a. Sampling Fresh Grout Fill: ASTM C172.
      b. Slump: ASTM C143; one test for each load of grout at point of discharge.
      c. Air Content: ASTM C231; one sample for every two grout loads at point of discharge, and when a change in the grout is observed.
      e. Compression Test Specimens:
         1) In accordance with ASTM C109/C109M; make one set of compression cubes for each 50 cubic yards of grout, or fraction thereof, of each mix design placed each day. Each set shall be four standard cubes, unless otherwise directed by ENGINEER.

   2. Non-shrink Grout: Perform sampling and testing for field quality control during non-shrink grout placing as follows:
      a. Perform compression testing of non-shrink grout in accordance to ASTM C109/C109M at intervals during construction as selected by ENGINEER. Make a set of four specimens for testing compressive strength at a period of time selected by the ENGINEER.
      b. Perform compression tests on epoxy grout and fabricate specimens for epoxy grout testing in accordance with ASTM C579, Method B, at intervals during construction as selected by the ENGINEER. Make a set of four specimens for testing compressive strength at a period of time selected by ENGINEER.

D. Evaluation of Field Quality Control Tests:
   1. Do not use grout, delivered to final point of placement, having slump or total air content that does not comply with the Contract Documents.
   2. Compressive strength tests for laboratory-cured cubes will be acceptable if averages of all sets of three consecutive compressive strength test results equal or exceed the required 28-day design compressive strength of the associated type of grout.
   3. If the compressive strength tests do not comply with the requirements in the Contract Documents, the grout represented by such tests will be considered defective and shall be removed and replaced, or subject to other action required by ENGINEER, at CONTRACTOR's expense.

E. Manufacturer's Services:

1. Manufacturers of proprietary materials shall make available upon 72 hours notification the services of qualified, full time employee, experienced in serving as a field service technician for the products required, to aid in assuring proper use of products under the actual conditions at the Site.

+ + END OF SECTION + +

SECTION 031000

CONCRETE FORMS AND ACCESSORIES

PART 1 – GENERAL

1.1 DESCRIPTION

A. Scope:
   1. CONTRACTOR shall provide all labor, materials, equipment, and incidentals as shown, specified, and required to furnish and install concrete forming and concrete accessories. The Work also includes:
      a. Designing forming systems in accordance with requirements of ACI 347 and the Contract Documents.
      b. Providing forming to accommodate the Work under this and other Sections and building into forming items such as sleeves, anchorage devices, inserts, pipe embedments, reinforcing, and all other items to be embedded in concrete for which placement is not specifically provided under other Sections.
      c. Provide forming to accommodate work under other contracts and assisting other contractors in building into forming items such as sleeves, anchorage devices, inserts, pipe embedments, reinforcing, and all other items required to be embedded in concrete under other contracts.

B. Coordination:
   1. Review installation procedures under this and other Sections and coordinate installation of items that must be installed with or before concrete forming Work.
   2. Notify other contractors in advance of the installation of concrete forming to provide other contractors with sufficient time for installing items included in their contracts that must be installed with or before concrete forming.
   3. Coordinate forming Specifications with requirements for finished surfaces specified in Section 03 30 00, Cast-In-Place Concrete.

C. Related Sections:
   1. Section 032000, Concrete Reinforcing.
   2. Section 033000, Cast-In-Place Concrete.
   3. Section 036000, Grouting.

1.2 REFERENCES

A. Standards referenced in this Section are:
   1. ACI 117, Specifications for Tolerances for Concrete Construction and Materials and Commentary.
   2. ACI 301, Specifications for Structural Concrete.
   3. ACI 347, Guide to Formwork for Concrete.
   4. ASTM C805/C805M, Test Method for Rebound Number of Hardened Concrete.
   5. ASTM C1074, Practice for Estimating Concrete Strength by the Maturity Method.
   6. NIST PS 1, Structural Plywood.

1.3 QUALITY ASSURANCE

A. Qualifications:

   1. Professional Engineer:
      a. CONTRACTOR or formwork Supplier shall retain a registered professional engineer legally qualified to practice in the state of Arizona. Professional engineer shall have at least five years' experience designing formwork and falsework of the type required.
      b. Responsibilities include:
         1) Reviewing formwork and falsework performance and design criteria stated in the Contract Documents.
         2) Preparing written requests for clarifications or interpretations of performance or design criteria for submittal to ENGINEER by CONTRACTOR.
         3) Preparing or supervising preparation of design calculations verifying compliance of formwork and falsework with requirements of the Contract Documents.
         4) Signing and sealing all calculations.
         5) Certifying that:
            a) Design of formwork and falsework was performed in accordance with performance and design criteria stated in the Contract Documents, and
            b) Design conforms to all Laws and Regulations, and to prevailing standards of practice.

1.4 SUBMITTALS

A. Action Submittals: Submit the following:
   1. Samples:
      a. Plywood form material used for smooth form finish, four inches square minimum.
      b. Form liner section sufficiently large to show two full repeating patterns, at least 12 inches square.
      c. Controlled permeability forming liner material, eight inches square, minimum.
      d. Form Liner Sample Panel:
         1) Sample shall show texture and surface pattern, required backing, form tie treatment, and treatment at liner panel joints. Use form material to be used in the Work.
         2) Minimum Size: Three feet by four feet.

B. Informational Submittals: Submit the following:
   1. Shop Drawings: When requested by ENGINEER, submit Shop Drawings showing and indicating general construction of individual forms, including:
      a. Layout of construction and expansion joint locations. Submit and obtain approval prior to submitting concrete reinforcement Shop Drawings.
      b. Special formed joints or reveals.
      c. Location, pattern, and details of form tie placement, removal, and repair procedures.
      d. Location and details for temporary openings.
      e. Void-form layout drawings and details of installation.
      f. Other items that would visually affect the finished concrete.
   2. Design of Temporary Measures: Design of formwork and falsework is CONTRACTOR's responsibility. Submit the following:
      a. Falsework layout drawings with the seal and signature of CONTRACTOR's or Supplier's professional engineer registered in the state of Arizona. Layout drawings shall show bracing details, waler arrangements, location of shores, joint forming details, and details at connections to previously placed concrete. ENGINEER's review will be for general conformance to the requirements of the Contract Documents and ACI 347, as indicated for delegated design in the General Conditions.
      b. Design calculations signed and sealed by a professional engineer registered in the state of Arizona for formwork and falsework, when requested by ENGINEER.
      c. Certification letter from CONTRACTOR's or Supplier's professional engineer stating that in-place falsework was inspected and complies with the intent of the falsework design.
   3. Product Data: Manufacturer's data for proprietary materials, including form coatings, manufactured form systems, ties and accessories.

4. Manufacturer's Instructions: Installation instructions for proprietary materials, including form coatings, manufactured form systems, ties and accessories.

1.5 PRODUCT DELIVERY, STORAGE AND HANDLING

A. Delivery and Storage:
   1. Deliver materials to Site to ensure uninterrupted progress of the Work.
   2. Upon delivery to the Site, place materials in area protected from weather.
   3. Store materials in accordance with manufacturer's recommendations.
   4. Store materials above ground on framework, blocking or in enclosures to prevent contact with ground and exposure to weather and direct sunlight. Cover wood for forms and other accessory materials with protective, waterproof covering. Provide for adequate air circulation or ventilation under cover.

B. Handle materials in accordance with the manufacturers' recommendations. Do not damage materials during handling.

PART 2 – PRODUCTS

2.1 SYSTEM PERFORMANCE

A. Design Criteria:
   1. Design, erect, support, brace and maintain forming in accordance with ACI 347 so that forming safely supports vertical and lateral loads that might be applied, until such loads can be supported by the concrete structure. Carry vertical and lateral loads to ground by forming system or in-place construction that has attained adequate strength for the purpose. Construct forming so that concrete members and structures are of correct size, shape, alignment, elevation, and position.
   2. Design forms and falsework to include values of live load, dead load, weight of moving equipment operated on forming, concrete mix, height of concrete drop, vibrator frequency, ambient temperature, foundation pressures, stresses, lateral stability, and other factors pertinent to safety of structure during construction.
   3. Provide shores and struts with positive means of adjustment capable of taking up forming settlement during concrete placing operations, using wedges or jacks, or a combination thereof. Provide trussed supports when adequate foundations for shores and struts cannot be secured.
   4. Support form facing materials by structural members spaced sufficiently close to prevent beyond tolerance deflection, in accordance with ACI 117. Fit forms placed in successive units for continuous surfaces to accurate alignment, free from irregularities and within allowable tolerances. For long-span members without intermediate supports, provide camber in forming as

required for anticipated deflections resulting from weight and pressure of fresh concrete and construction loads.

5. Design and construct forming to be readily removable without impact, shock or damage to concrete surfaces and adjacent materials.
6. Provide forming sufficiently tight to prevent leakage of cement paste during concrete placing. Solidly butt joints and provide backup material at joints as required to prevent leakage and fins.

2.2 FORM MATERIALS

A. Forms for Smooth Finish Concrete:
   1. Unless otherwise shown or indicated in the Contract Documents, construct forming for smooth concrete surfaces with plywood, metal, metal-framed plywood-faced, or other panel type materials acceptable to ENGINEER, to provide continuous, straight, smooth as-cast surfaces with no wood grain or other surface texture imparted by forming. Provide in largest practical sizes to minimize number of joints and to conform to joint system shown or specified in the Contract Documents. Provide form material with sufficient thickness to withstand pressure of newly placed concrete without bow or deflection.

B. Forms for Standard Finish Concrete:
   1. Form concrete surfaces designated to have standard formed finish with plywood, lumber, metal, or other acceptable material. Provide lumber that is dressed on at least two edges and one side.

C. Form Ties:
   1. Provide factory-fabricated metal form ties, designed to prevent form deflection, and to prevent spalling of concrete surfaces upon removal.
   2. Unless otherwise shown or indicated in the Contract Documents, provide ties so that portion of tie remaining within concrete after removal of exterior parts of tie is at least 1.5 inches from the outer concrete surface. Unless otherwise shown or indicated in the Contract Documents, provide form ties that will leave a hole no larger than one-inch diameter in concrete surface.
   3. Ties shall have waterstops on all exterior, below-grade walls, and walls subject to hydrostatic pressure.
   4. Ties shall leave a uniform, circular hole when forms are removed.
   5. Do not use removable ties unless accepted by ENGINEER. Removable ties are not allowed on exterior below-grade walls or walls subject to hydrostatic pressure. If removable ties are accepted, CONTRACTOR shall submit hole repair details for ENGINEER approval.
   6. Wire ties are not allowed.
   7. Do not use reinforcing bars shown by the Drawings as part of the form tie system unless approved by ENGINEER.

D. Form Coatings:
   1. Provide commercial formulation form-coating compounds that will not bond with, stain, nor adversely affect concrete surfaces, and will not impair subsequent treatment of concrete surfaces requiring bond or adhesion, nor impede wetting of surfaces to be cured with water or curing compounds. For concrete surfaces that will be in contact with potable water or water that will be treated to become potable, form coating shall be a mineral oil base coating.

2.3 PREFORMED EXPANSION JOINT FILLER

A. Provide preformed expansion joint filler complying with ASTM D1752, Type I (sponge rubber) or Type II (cork).

2.4 CONCRETE CONSTRUCTION JOINT ROUGHENER

A. Provide water-soluble non-flammable, surface-retardant roughener.

B. Product and Manufacturer: Provide one of the following for the types of joints specified:
   1. Rugasol-S, by Sika Corporation for horizontal joints only.
   2. Concrete Surface Retarder-Formula S, by Euclid Chemical Company, for horizontal joints only.
   3. Concrete Surface Retarder-Formula F, by Euclid Chemical Company, for vertical joints only.
   4. TK-6100 Concrete Form Surface Retarder, by TK Products.
   5. Or equal.

2.5 EPOXY BONDING AGENT

A. Provide a two-component epoxy-resin bonding agent.

B. Product and Manufacturer: Provide one of the following:
   1. Sikadur 32 Hi-Mod LPL, by Sika Corporation.
   2. DURAL LPL MV, by the Euclid Chemical Company.
   3. Sure Bond J-58, by Dayton Superior.
   4. Or equal.

2.6 EPOXY-CEMENT BONDING AGENT

A. Provide three component epoxy resin-cement blended formulated as bonding agent.

B. Product and Manufacturer: Provide one of the following:
   1. Sika Armatec 110 EpoCem, as manufactured by Sika Corporation.
   2. Duralprep A.C., as manufactured by the Euclid Chemical Company.
   3. MasterEmaco P124, as manufactured by MBT/ChemRex.
   4. Or equal.

2.7 JOINT SEALANT AND ACCESSORIES

A. For joint sealants and accessories used on isolation joints, control joints, and expansion joints, refer to contract drawings.

2.8 CONCRETE BOND BREAKERS

A. Provide asphalt-saturated rag felt building paper, not less in weight than commercially known as 15 pound felt building paper, which weighs 15 pounds per 100 square feet.

B. Chemical Bond Breaker:
   1. Provide medium solids resin solution chemical concrete bond breaker complying with ASTM C309, Type I, Class B.

PART 3 – EXECUTION

3.1 INSPECTION

A. Examine substrate and conditions under which the Work will be performed and notify ENGINEER in writing of unsatisfactory conditions. Do not proceed with the Work until unsatisfactory conditions are corrected.

3.2 FORM CONSTRUCTION

A. Construct forms in accordance with ACI 347; to the exact sizes, shapes, lines, and dimensions shown; as required to obtain accurate alignment, location, and grades; to tolerances specified; and to obtain level and plumb work in finish structures. Provide for openings, offsets, keyways, recesses, moldings, rustications, reglets, chamfers, blocking, screeds, bulkheads, anchorages and inserts, and other features required. Use selected materials to obtain required finishes. Finish shall be in accordance with approved mock-up or sample panel, when specified.

B. Allowable Tolerances:
   1. Construct forming to provide completed concrete surfaces complying with tolerances specified in ACI 117, ACI 301, and ACI 347.a. Other surfaces exposed to view shall be Class B surface, 1/4-inch offset.
      b. Other surfaces shall be Class C surface, 1/2-inch offset.
   2. Tolerances apply to form offsets and to irregularities within the formed surface when measured with a straightedge over a five-foot distance.

C. Install forming and accessories for facilities in accordance with manufacturer's instructions, Laws and Regulations, and the Contract Documents.

D. Fabricate forms for easy removal without damaging concrete surfaces. Provide crush plates or wrecking plates where stripping may damage cast concrete surfaces. Provide top forms for inclined surfaces where the slope is too steep to place

concrete with bottom forms only. Kerf wood inserts for forming keyways, reglets, recesses, and the like, to prevent swelling and assure ease of removal.

E. Provide temporary openings where interior area of forming is inaccessible for cleanout, for inspection before concrete placement, and for placing concrete. Brace temporary closures and set tightly to forms to prevent loss of cement paste. Locate temporary openings on forms in locations as inconspicuous as possible, consistent with requirements of the Work. Form intersecting planes of openings to provide true, clean-cut corners, with edge grain of plywood not exposed as form for concrete.

F. Falsework:
   1. Erect falsework and support, brace, and maintain falsework to safely support vertical, lateral, and asymmetrical loads applied until such loads can be supported by in-place concrete structures. Construct falsework so that adjustments can be made for take-up and settlement.
   2. Provide wedges, jacks or camber strips to facilitate vertical adjustments. Carefully inspect falsework and formwork during and after concrete placement operations to determine abnormal deflection or signs of failure; make necessary adjustments to produce finished Work of required dimensions.

G. Forms for Smooth Finish Concrete:
   1. Do not use metal cover plates for patching holes or defects in forms.
   2. Provide sharp, clean corners at intersecting planes, without visible edges or offsets. Back joints with extra studs or girts to maintain true, square intersections.
   3. Use extra studs, walers, and bracing to prevent bowing of forms between studs and to avoid bowed appearance in concrete. Do not use narrow strips of form material that will produce bow.
   4. Assemble forms so they may be readily removed without damage to exposed concrete surfaces.
   5. Form molding shapes, recesses, rustication joints and projections with smooth-finish materials, and install in forms with sealed joints to prevent displacement.

H. Corner Treatment:
   1. Form exposed corners of beams, walls, foundations, bases and columns to produce smooth, solid, unbroken lines, except as otherwise shown or indicated in the Contract Documents. Chamfer exposed corners.
   2. Form chamfers with 3/4-inch by 3/4-inch strips, unless otherwise shown or indicated in the Contract Documents, accurately formed and surfaced to produce uniformly straight lines and tight edge joints. Use rigid PVC chamfers for architecturally formed concrete. Extend terminal edges to required limit and miter chamfer strips at changes in direction.
   3. Reentrant or internal and unexposed corners may be formed either square or chamfered.

I. Openings and Built-In Work:
   1. Provide openings in concrete forming shown or required under other Sections. Refer to Paragraph 1.1.B of this Section for coordination requirements.
   2. Accurately place and securely support items to be built into forms.

J. Sealing Forming:
   1. Forming joints shall be tight-fitting or otherwise sealed to prevent loss of cement paste.
   2. Provide forming resting against concrete surfaces with compressible gasket material between the concrete and edge of form, to fill irregularities and create tight seal.

K. Cleaning and Tightening:
   1. Thoroughly clean forms and adjacent surfaces to receive concrete. Remove chips, wood, sawdust, dirt, and other debris just before concrete is placed. Retighten forms immediately after placing concrete, as required to eliminate cement paste leaks.

L. Tie Hole Repair:
   1. Repair tie holes in accordance with Section 033000, Cast-In-Place Concrete.

3.3 FORM COATINGS

A. Coat form contact surfaces with non-staining form-coating compound before installing reinforcing materials. Do not allow excess form coating material to accumulate in forms or come into contact with surfaces that will be bonded to fresh concrete. Apply in compliance with manufacturer's instructions.

B. Coat steel forms with non-staining, rust-preventive form oil, or otherwise protect against rusting.

C. Do not use form coatings on form surfaces covered with CPF liner material.

3.4 CONSTRUCTION JOINTS

A. Comply with requirements of ACI 301 and the Contract Documents.

B. Locate and install construction joints as shown or indicated on the Drawings. Where not shown or indicated, locate joints to not impair strength of the structure; position joints at points of minimum shear. Location of joints shall be approved by ENGINEER. In addition to joints shown or indicated on the Drawings, locate construction joints as follows:
   1. In walls, locate joints at a maximum spacing of 40 feet. Locate joints away from wall intersections a minimum of one-quarter of the clear span distance between wall intersections measured horizontally.

C. Horizontal Joints:
   1. Roughen concrete at interface of construction joints by abrasive blasting, hydroblasting, or using surface retardants and water jets to expose aggregate and remove accumulated concrete on projecting rebar immediately subsequent to form stripping, unless otherwise approved by ENGINEER. Immediately before placing fresh concrete, thoroughly clean existing contact surface using stiff brush or other tools and stream of pressurized water. Surface shall be clean and wet, and free from pools of water at time of placing fresh concrete.
   2. Remove laitance, waste mortar, and other substances that may prevent complete adhesion. Where joint roughening was performed more than seven days prior to concrete placing or where dirt or other bond reducing contaminants are on surface, perform additional light abrasive blasting or hydroblasting to remove laitance and all bond-reducing materials just prior to concrete placement.
   3. Provide over contact surface of concrete a six-inch layer of Construction Joint Grout as specified in Section 03600, Grouting. Place fresh concrete before grout has attained its initial set. Placement of grout may be omitted if concrete mix has slump increased to at least six inches by addition of high range water reducer.

D. Vertical Joints:
   1. Apply roughener to the form in thin, even film by brush, spray, or roller in accordance with manufacturer's instructions. After roughener is dry, concrete may be placed.
   2. When concrete has been placed, remove joint surface forms as early as necessary to allow for removal of surface retarded concrete. Wash loosened material off with high-pressure water spray to obtain roughened surface subject to approval by ENGINEER. Alternately, surface shall be roughened by abrasive blasting or hydroblasting to expose aggregate. Outer one-inch of each side of joint face shall be masked and protected from blasting to avoid damaging member surface.

3.5 EXPANSION JOINTS

A. Comply with requirements of ACI 301 and this Section.

B. Locate and install expansion joints as shown and indicated in the Contract Documents. Install joint filler in accordance with manufacturer's instructions. Install sealants as specified in this Section.

3.6 CONTROL JOINTS

A. Provide control joints in non-water bearing slabs on grade as shown or indicated on the Drawings. Where control joints are not shown or indicated on the Drawings, space control joints at 24 to 36 times thickness of slab in both directions. Locate control joints only at places approved by ENGINEER.

B. A groove, with depth of at least 25 percent of the member thickness, shall be tooled, formed, or saw-cut in concrete. Groove shall be filled with joint sealant material.

C. Where control joint is formed by saw cutting, make sawcut in presence of ENGINEER or ENGINEER's representative immediately after concrete has set sufficiently to support the saw and be cut without damage to concrete. Keep concrete continually moist during cutting. Joints shall be approximately 1/8-inch wide.

D. Control joints may be formed with tool or by inserting joint forming strip. After concrete has achieved design strength, remove upper portion of joint forming strip and fill void with sealant.

3.7 ISOLATION JOINTS

A. Provide isolation joint where sidewalk or other slab on grade abuts a concrete structure and slab on grade is not shown doweled into that structure. Form isolation joint by 1/2-inch joint filler with upper 1/2-inch of joint filled with sealant.

3.8 BONDING AGENT

A. Use epoxy bonding agent for bonding of fresh concrete to concrete that has been in place for at least 60 days, and for bonding to existing concrete.

B. Use epoxy-cement bonding agent for the following:
   1. Bonding toppings and concrete fill to concrete that has been in place for at least 60 days, and for bonding to existing concrete.
   2. For locations where bonding agent is required and concrete cannot be placed within open time period of epoxy bonding agent.

C. Use cement-water slurry as bonding agent for toppings and concrete fill to new concrete. Cement water slurry shall be worked into surface with stiff bristle broom and place the concrete before cement-water slurry dries.

D. Handle and store bonding agent in accordance with manufacturer's printed instructions and safety precautions.

E. Mix bonding agent in accordance with manufacturer's instructions.

F. Before placing fresh concrete, thoroughly roughen and clean hardened concrete surfaces and coat with bonding agent not less than 1/16-inch thick. Place fresh concrete while bonding agent is still tacky (within its open time), without removing in-place bonding agent coat, and as directed by manufacturer.

3.9 INSTALLATION OF EMBEDDED ITEMS

A. Set and build into forming anchorage devices and other embedded items, shown, specified, or required under other Sections. Refer to Paragraph 1.1.B of this Section for coordination requirements. Use necessary setting drawings, diagrams, instructions, and directions.

B. Edge Forms and Screeds Strips for Slabs:
   1. Set edge forms or bulkheads and intermediate screed strips for slabs to obtain required elevations and contours in finished slab surface. Provide and secure units to support screeds.

3.10 FIELD QUALITY CONTROL

A. Tests and Inspections:
   1. Before placing concrete, check ties, tie cones, tie waterstops, embedded items, form coatings, forming stability, alignment, and tolerances. Make corrections and adjustments to ensure forming complies with intent of the forming design, proper stability of forming systems, and accurate size and location of concrete members.
   2. During concrete placing, check forming and related supports to ensure that forms are not displaced and that completed Work will be within specified tolerances.
   3. If forms are unsatisfactory in any way, either before or during concrete placing, stop or postpone placing of concrete until defects are corrected as required by CONTRACTOR's or Supplier's professional engineer and accepted by ENGINEER.

3.11 REMOVAL OF FORMS

A. Determination of time between placing concrete and removing forms is CONTRACTOR's responsibility. Requirements specified in this Section are minimum times and requirements intended to ensure that concrete will support its own weight, and do not consider additional effects of the construction. Additional effects of the construction shall be accounted for by CONTRACTOR when determining time for removing forming. Time for removing of forms is subject to ENGINEER's acceptance.

B. Comply with requirements of ACI 301 and ACI 347, except as indicated in the Contract Documents.

C. Removal of Forms for Walls, Columns, Sides of Beams and Girders, and Slab and Foundation Edges:

1. Comply with requirements of Table 03100-A of this Section:

TABLE 03100-A, REMOVAL OF FORMS

Component	Average Daily Ambient Air Temperature (deg F)				Min. Concrete Compressive Strength for Form Removal
	Over 70 F	**60 F to 70 F**	**50 F to 60 F**	**Below 50 F**	
Walls	One day	Two days	Three days	See Paragraph 3.6.C.2 of this Section	3000 psi
Slab and foundation edges	One day	One day	Two days		3000 psi

2. When average daily ambient air temperature is below 50 degrees F, do not remove forms until concrete attains minimum compressive strength indicated in Table 03100-A for form removal, and comply with Paragraph 3.6.C.3.b of this Section.
3. Concrete Strength Requirements for Form Removal:
   a. For other than beams and elevated slabs, do not remove forms until concrete attains the minimum concrete compressive strength indicated in Table 03100-A for form removal.
   b. For beams and elevated slabs, do not remove supporting forms or shoring until concrete attains minimum of 90 percent of its specified compressive strength.

D. Alternative Criteria for Removing Forms for Walls, Columns, Sides of Beams and Girders, and Slab and Foundation Edges: CONTRACTOR has the option of submitting an alternative removal of forms table, together with supporting data, for ENGINEER's acceptance. Supporting data shall include representative field data for each different placement ambient temperature condition and minimum of three tests per temperature condition to ensure that accurate correlation between concrete strength and placement temperature is obtained.

E. Determination of In-place Concrete Strength:
   1. Determine compressive strength of in-place concrete by compression test specimens cured at the Site under the same conditions of temperature and moisture as the concrete member under consideration.
   2. Alternately, determine compressive strength of in-place concrete by maturity factor procedure in accordance with ASTM C1074 and approved by ENGINEER. Location of embedded thermistors or thermocouples shall be as approved by ENGINEER.

F. When high-early strength concrete is used, time for removing the forms will be developed at the Site from the age/strength relationships established for the materials and proportions used by tests in accordance with ACI 301.

G. Leave form facing material in place for minimum of four days after concrete placement, unless otherwise approved by ENGINEER.

H. Continue curing, including bottom surfaces of slabs and beams, after form removal in accordance with Section 03300, Cast-In-Place Concrete.

3.12 PERMANENT SHORES

A. Provide permanent shores in accordance with ACI 347.

B. Reshores are not allowed.

3.13 RE-USE OF FORMS

A. Clean and repair surfaces of forms to be re-used in the construction. Do not use split, frayed, delaminated, or otherwise damaged form facing material. Apply form coating compound material to concrete contact surfaces as specified for forming.

B. When forms are extended for successive concrete placement, thoroughly clean surfaces, remove fins and laitance, and tighten forms to close all joints. Align and secure joints to avoid offsets. Do not use "patched" forms for exposed concrete surfaces. Form surfaces are subject to ENGINEER's approval.

+ + END OF SECTION + +

SECTION 032000

CONCRETE REINFORCING

PART 1 – GENERAL

1.1 DESCRIPTION

A. Scope:
   1. CONTRACTOR shall provide all labor, materials, equipment, and incidentals as shown, specified, and required to furnish and install concrete reinforcing.
   2. Extent of concrete reinforcing is shown and indicated in the Contract Documents.
   3. Work includes fabrication and placement of reinforcing including bars, ties, and supports, and welded wire fabric for concrete, and encasements.

B. Related Sections:
   1. Section 031000, Concrete Forms and Accessories.
   2. Section 033000, Cast-In-Place Concrete.
   3. Section 035500, Adhesive Bonding Material Systems for Structural Applications.
   4. Section 055120 Anchor Bolts and Post Installed Anchors.

1.2 REFERENCES

A. Standards referenced in this Section are:
   1. ACI 315, Details and Detailing of Concrete Reinforcement.
   2. ACI 318, Building Code Requirements for Structural Concrete.
   3. ACI 350, Code Requirements for Environmental Engineering Concrete Structures.
   4. ANSI/AWS D1.4, Structural Welding Code - Reinforcing Steel.
   6. ASTM A615, Specification for Deformed and Plain Carbon-Steel Bars for Concrete Reinforcement.
   7. ASTM A706, Specification for Low-Alloy Steel Deformed and Plain Bars for Concrete Reinforcement.
   8. ASTM E329, Specification for Agencies Engaged in Construction Inspection and/or Testing.
   9. Concrete Reinforcing Steel Institute (CRSI), CRSI 1MSP, Manual of Standard Practice.
   10. ICC Evaluation Service (ES) AC 308, Acceptance Criteria for Post-Installed Anchors in Concrete Elements.

1.3 QUALITY ASSURANCE

A. Qualifications:
   1. Testing Laboratory: Shall meet requirements of ASTM E329 and shall have experience in the testing welded splices of reinforcing steel and tension testing of reinforcing bars set in adhesive in hardened concrete.
   2. Installer of Adhesive Dowels: Shall be experienced and certified by manufacturer of adhesive as possessing necessary training for installing manufacturer's products. Distributors or manufacturer's representatives shall not provide product training unless qualified as certified trainers by anchor manufacturer.

1.4 SUBMITTALS

A. Action Submittals: Submit the following:
   1. Shop Drawings:
      a. Drawings for fabricating, bending, and placing concrete reinforcing. Comply with ACI 315, Parts A and B.
      b. For walls, show elevations at minimum scale of 1/4-inch to one foot.
         1) Elevations shall show all openings and reference details that identify additional reinforcing required around each opening.
         2) Elevations shall denote each wall intersection and reference a detail that identifies additional reinforcing required at wall intersection. As an alternate to providing separate details for each wall intersection, provide overall plan detailing only the additional wall intersection reinforcing for each wall intersection.
      c. For slabs and mats, show top and bottom reinforcing on separate plan views.
         1) Plans shall show all openings and shall reference details that identify additional reinforcing around each opening.
      d. Show bar schedules, stirrup spacing, diagrams of bent bars, location of bar splices, length of lap splices, arrangements, and assemblies, as required for fabricating and placing concrete reinforcing unless otherwise noted.
      f. Splices shall be kept to a minimum. Avoid, when possible, splices in regions of maximum tensile stresses.
      g. Drawings detailing location of all construction and expansion joints, as required under Section 031000, Concrete Forms and Accessories, shall be submitted and approved before Shop Drawings for reinforcing are submitted.
      h. Drawings detailing location, spacing, edge distance, and embedment depth of adhesive dowels. Adhesive system shall be submitted and approved before Shop Drawings with adhesive dowels are submitted.
   2. Product Data:
      a. Manufacturer's product data for adhesive, if not submitted under other Sections.

b. Adhesive manufacturer's test data and ICC ES report to verify specified capacity of adhesive dowels.

B. Informational Submittals: Submit the following:
1. Certificates:
a. Steel manufacturer's certificates of mill analysis, tensile, and bend tests for reinforcing steel.
b. Adhesive manufacturer's certification verifying that installer is qualified and using proper installation procedures.
2. Manufacturer's Instructions:
a. Installation instructions for adhesive systems.
3. Field Quality Control Submittals:
a. Reports of all field quality control testing, where applicable.
b. Results of required inspection of welded splices of reinforcing bars.
c. Results of required tensile testing of adhesive dowels. Include size and location of bars tested.

1.5 DELIVERY, HANDLING, AND STORAGE

A. Deliver concrete reinforcing products to Site bundled, tagged, and marked. Use metal tags indicating bar size, lengths, and other information corresponding to markings on approved Shop Drawings.

B. Store concrete reinforcing products to prevent damage and accumulation of dirt and excessive rust. Store on heavy wood blocking so that reinforcing does not come into contact with the ground.

PART 2 – PRODUCTS

2.1 MATERIALS

A. Reinforcing Bars: Shall be deformed in accordance with ASTM A615, and as follows:
1. Provide Grade 60 for all bars.

B. Mechanical Couplers: Reinforcement bars may be spliced with mechanical connection. Connection shall be full mechanical connection that shall develop in tension or compression, as required, at least 125 percent of specified yield strength (fy) of bar in accordance with ACI 318 and ACI 350. Where splices at the face of wall are shown or approved by ENGINEER, form saver-type mechanical couplers may be used. Form-saver couplers shall have integral plates designed to positively connect coupler to formwork.

C. Steel Wire: Shall be in accordance with ASTM A82.

D. Supports for Reinforcement: Bolsters, chairs, spacers, and other devices for spacing, supporting and fastening reinforcing in place.

1. Use wire bar type supports complying with CRSI 1 MSP recommendations, except as specified in this Section. Do not use wood, brick, or other unacceptable materials.
2. For slabs on grade, use precast concrete blocks, four inches square in plan, with embedded tie wire as specified by CRSI 1 MSP. Precast concrete blocks shall have same or higher compressive strength as specified for concrete in which they are located.
3. For concrete surfaces where legs of supports are in contact with forms, provide supports complying with CRSI 1 MSP as follows:
    a. At formed surfaces in contact with soil, weather, or liquid, or located above liquid, supports shall be CRSI Class 1 for maximum protection. Plastic coating on legs shall extend at least 0.5-inch upward from form surface.
    b. At interior dry surfaces (not located above liquid), supports shall be either Class 1 or Class 2 for moderate protection.
4. Over waterproof membranes, use precast concrete chairs.

E. Adhesive Dowels:
1. Dowels:
    a. Dowel reinforcing bars shall be deformed in accordance with ASTM A615, Grade 60.
2. Adhesive:
    a. Requirements for adhesive are specified under requirements for concrete adhesive anchors in 035500, Adhesive Bonding Material Systems for Structural Applications.

2.2 FABRICATION

A. General: Fabricate reinforcing bars to conform to required shapes and dimensions, with fabrication tolerances complying with CRSI 1 MSP. In case of fabricating errors, do not re-bend or straighten reinforcing in manner that injures or weakens material.

B. Unacceptable Materials: Reinforcing with one or more of the following defects is not allowed:
1. Bar lengths, bends, and other dimensions exceeding specified fabrication tolerances.
2. Bends or kinks not shown on approved Shop Drawings.
3. Bars that do not meet or exceed their ASTM specification requirements when hand-wire-brushed, with respect to cross section, nominal weight, or average height of deformations.

PART 3 – EXECUTION

3.1 INSPECTION

A. Examine the substrate and conditions under which concrete reinforcing is to be placed and notify ENGINEER in writing of unsatisfactory conditions. Do not proceed with Work until unsatisfactory conditions have been corrected.

3.2 INSTALLATION

A. Comply with applicable recommendations of Laws and Regulations, applicable standards, and CRSI 1 MSP for details and methods of reinforcing placement and supports.

B. Clean reinforcing to remove loose rust and mill scale, earth, ice, and other materials that reduce or destroy bond with concrete.

C. Position, support, and secure reinforcing against displacement during formwork construction and concrete placing. Locate and support reinforcing by metal chairs, runners, bolsters, spacers, and hangers, as required.
   1. Place reinforcing to obtain minimum concrete coverages specified in ACI 318, AC I 350, and the Contract Documents. Arrange, space, and securely tie bars and bar supports together with 16-gage wire to hold reinforcing accurately in position during concrete placing. Set wire ties so that twisted ends are directed away from exposed concrete surfaces.
   2. Prior to placing concrete, using surveyor's level or string line, demonstrate to ENGINEER that specified cover of reinforcing has been attained.
   3. Do not secure reinforcing steel to forms with wire, nails, or other ferrous metal. Metal supports subject to corrosion shall not touch formed or exposed concrete surfaces.

D. Allowable Placing Tolerances: Comply with ACI 318, Chapter 25 - Details of Reinforcement, and ACI 350, Chapter 7 - Details of Reinforcement, except as specified in this Section:
   1. Concrete surfaces in contact with liquid shall have minimum of two inches of concrete over reinforcing steel.

E. Provide sufficient number of supports of strength required to carry reinforcing. Do not place reinforcing bars more than two inches beyond last leg of continuous bar support. Do not use supports as bases for runways for concrete conveying equipment and similar construction loads.

F. Lap Splices:
   1. Provide standard reinforcing splices by lapping ends, placing bars in contact, and tying tightly with wire. Comply with requirements shown for minimum lap of spliced bars as shown on the drawings.

G. Mechanical Couplers:

1. Mechanical butt splices shall be in accordance with recommendations of mechanical splicing device manufacturer. Butt splices shall develop 125 percent of specified minimum yield tensile strength of spliced bars or of smaller bar in transition splices. Bars shall be flame-dried before butt splicing. Provide adequate jigs and clamps or other devices to support, align, and hold longitudinal centerline of bars being butt spliced in straight line.

H. Adhesive Dowels:

1. Comply with manufacturer's and ENGINEER's written installation instructions and requirements of this Section.
2. Drill holes to adhesive system manufacturer's recommended drill bit diameter and to specified depth. Drill holes in hammering and rotation mode with carbide-tipped drill bits complying with tolerances indicated in ANSI B212.15. Core-drilled holes shall not be permitted without approval by the ENGINEER.
3. Before setting adhesive dowel, hole shall be made free of dust and debris by method recommended by adhesive system manufacturer. Brush the hole with adhesive system manufacturer-approved brush and blow hole clean with clean, dry, oil-free compressed air to remove all dust and loose particles. Hole shall be dry as defined by adhesive system manufacturer.
4. Before injecting adhesive, obtain ENGINEER's concurrence that hole is dry and free of oil and other contaminants.
5. Prior to injecting adhesive into the drilled hole, dispense to an appropriate location for waste an initial amount of adhesive from the mixing nozzle until adhesive is a uniform color, indicating that product is properly mixed.
6. Inject adhesive into hole through injection system-mixing nozzle and extension tubes (as required) placed to bottom of hole. Withdraw nozzle's discharge end as adhesive is placed while keeping nozzle immersed to prevent formation of air pockets. Fill hole to depth that ensures that excess material is expelled from hole during dowel placing.
7. Twist dowel during insertion into partially-filled hole to ensure full wetting of rod surface with adhesive. Insert rod slowly to avoid developing air pockets.
8. Provide adequate curing in accordance with adhesive system manufacturer's requirements prior to continuing with adjoining or adjacent Work that could impose or impart load on the dowels. Do not begin adjoining or adjacent Work until dowels are successfully tested or when approved by ENGINEER.
9. Limitations:
    a. Installation Temperature: Comply with manufacturer's instructions for installation temperature requirements. Provide temporary protection and other measures, such as heated enclosures, necessary to ensure that base material temperature complies with requirements of adhesive systems manufacturer during installation and adhesive system curing.
    b. Oversized Holes: Advise ENGINEER immediately if size of drilled hole is larger than recommended by adhesive system manufacturer.

Cost of corrective measures, including but not limited to redesign of dowels due to decreased capacities, shall be paid by CONTRACTOR.

3.3 FIELD QUALITY CONTROL

A. Site Inspections and Tests:
   1. General:
      a. Do not place concrete until reinforcing is inspected, and permission for placing concrete is granted by ENGINEER. Concrete placed in violation of this provision will be rejected.
      b. Do not close up formwork for walls and other vertical members until reinforcing is inspected, and permission for placing concrete is granted by ENGINEER. Concrete placed in violation of this provision will be rejected.
      c. Correct defective Work by removing and replacing or correcting, as required by ENGINEER.
      d. CONTRACTOR shall pay cost of corrections and subsequent testing required to confirm integrity of post-installed anchors.
      e. Testing laboratory shall submit test results to CONTRACTOR and ENGINEER within 24 hours of completion of test.

+ + END OF SECTION + +

SECTION 033000

CAST-IN-PLACE CONCRETE

PART 1 – GENERAL

1.1 DESCRIPTION

A. Scope:
   1. Provide all labor, materials, equipment, and incidentals as shown, specified, and required to furnish and install cast-in-place concrete.
   2. The Work includes providing concrete consisting of portland cement, fine pan coarse aggregate, water, and approved admixtures; combined, mixed, transported, placed, finished, and cured. The Work also includes:
      a. Providing openings in concrete to accommodate the Work under this and other Sections, and building into the concrete all items such as sleeves, frames, anchorage devices, inserts, and all other items to be embedded in concrete Work.

B. Coordination:
   1. Review installation procedures under other Sections and coordinate installation of items to be installed in the concrete Work.

C. Classifications of Concrete:
   1. Class "A" concrete shall be steel reinforced and includes the following:
      a. Foundations.
      b. Walls.
      c. Slabs.
   2. Class "B" concrete shall be placed without forms or with simple forms, with little or no reinforcing, and includes the following:
      a. Concrete fill.
      b. Equipment bases.
      c. Pipe supports.
      d. Thrust blocks.
      e. Encasements.
      f. Duct banks.

D. Related Sections:
   1. Section 031000, Concrete Forms and Accessories.
   2. Section 032000, Concrete Reinforcing.
   3. Section 036000, Grout.

1.2 REFERENCES

A. Standards referenced in this Section are:
   1. AASHTO M 182, Specification for Burlap Cloth Made From Jute or Kenaf and Cotton Materials.

2. AASHTO TP23, Test Method for Water Content of Freshly Mixed Concrete Using Microwave Oven Drying.
3. ACI 117, Specifications for Tolerances for Concrete Construction and Materials and Commentary.
4. ACI 214R, Evaluation of Strength Test Results of Concrete.
5. ACI 301, Specifications for Structural Concrete.
6. ACI 302.1R, Guide for Concrete Floor and Slab Construction.
7. ACI 304R, Guide for Measuring, Mixing, Transporting and Placing Concrete.
8. ACI 305R, Specification for Hot Weather Concreting.
9. ACI 306R, Cold Weather Concreting.
10. ACI 309R, Guide for Consolidation of Concrete.
11. ACI 318, Building Code Requirements for Structural Concrete and Commentary.
12. ACI 350/350R, Code Requirements for Environmental Engineering Concrete Structures and Commentary.
13. ASTM C31/C31M, Practice for Making and Curing Concrete Test Specimens in the Field.
14. ASTM C33, Specification for Concrete Aggregates.
15. ASTM C39/C39M, Test Method for Compressive Strength of Cylindrical Concrete Specimens.
16. ASTM C42/C42M, Test Method for Obtaining and Testing Drilled Cores and Sawed Beams of Concrete.
17. ASTM C94/C94M, Specification for Ready-Mixed Concrete.
18. ASTM C109/C109M, Test Method for Compressive Strength of Hydraulic Cement Mortars (Using 2-in. or [50-mm] Cube Specimens).
19. ASTM C138/C138M, Test Method for Density (Unit Weight), Yield, and Air Content (Gravimetric) of Concrete.
20. ASTM C143/C143M, Test Method for Slump of Hydraulic- Cement Concrete.
21. ASTM C150, Specification for Portland Cement.
22. ASTM C157/C157M, Test Method for Length Change of Hardened Hydraulic-Cement Mortar and Concrete.
23. ASTM C171, Specification for Sheet Materials for Curing Concrete.
24. ASTM C172, Practice for Sampling Freshly Mixed Concrete.
25. ASTM C231, Test Method for Air Content of Freshly Mixed Concrete by the Pressure Method.
26. ASTM C260, Specification for Air-Entraining Admixtures for Concrete.
27. ASTM C309, Specification for Liquid Membrane-Forming Compounds for Curing Concrete.
28. ASTM C330, Specification for Lightweight Aggregates for Structural Concrete.
29. ASTM C494/C494M, Specification for Chemical Admixtures for Concrete.
30. ASTM C618, Specification for Coal Fly Ash and Raw or Calcined Natural Pozzolan for Use in Concrete.
31. ASTM C882/C882M, Test Method for Bond Strength of Epoxy-Resin Systems Used with Concrete by Slant Shear.

32. ASTM C989, Specification for Ground Granulated Blast-Furnace Slag for Use in Concrete and Mortars.
33. ASTM C1064/C1064M, Standard Test Method for Temperature of Freshly Mixed Hydraulic-Cement Concrete.
34. ASTM C1077, Practice for Laboratories Testing Concrete and Concrete Aggregates for Use in Construction and Criteria for Laboratory Evaluation.
35. ASTM C1240, Specification for Silica Fume Used in Cementitious Mixtures.
36. ASTM D1042, Test Method for Linear Dimensional Changes of Plastics Under Accelerated Service Conditions.
37. ASTM D3574, Standard Test Methods for Flexible Cellular Materials - Slab, Bonded, and Molded Urethane Foams.
38. ASTM E96/E96M, Test Methods for Water Vapor Transmission of Materials
39. ASTM E329, Specification for Agencies Engaged in Construction Inspection and/or Testing.
40. ASTM E1643, Practice for Installation of Water Vapor Retarders Used in Contact with Earth or Granular Fill Under Concrete Slabs.
41. ASTM E1745, Specification for Water Vapor Retarders Used in Contact with Soil or Granular Fill under Concrete Slabs.
42. NSF/ANSI 61, Drinking Water System Components - Health Effects.

1.3 QUALITY ASSURANCE

A. Qualifications:
   1. Concrete Testing Laboratory:
      a. Employ independent testing laboratory experienced in design and testing of concrete materials and mixes to perform material evaluation tests and to design concrete mixes. Employ different laboratories for design of concrete mixes and field testing.
         1) Testing agency shall be in accordance with ASTM E329 and ASTM C1077.
         2) Testing laboratory shall have been inspected and passed within previous two years by Cement and Concrete Reference Laboratory (CCRL) of NIST for: testing concrete aggregates, and for preparing and testing concrete trial batches with or without admixtures. Testing laboratory shall provide documentation indicating how deficiencies, if any, in most recent CCRL inspection report were corrected.
         3) Selection of testing laboratory is subject to OWNER's acceptance.
         4) Submit written description of proposed concrete testing laboratory giving qualifications of personnel, laboratory facilities, and equipment, and other information requested by ENGINEER.
   2. Water Reducing Admixture Manufacturer:
      a. Water-reducing admixtures shall be manufactured under strict quality control in facilities operated under a quality assurance program. Submit copy of manufacturer's quality assurance handbook to document program existence.
      b. Manufacturer shall maintain a concrete testing laboratory approved by CCRL at NIST.

c. Manufacturer shall be capable of providing services of qualified field service representatives at the Site.

B. Laboratory Trial Batch:
1. Each concrete mix design specified shall be verified by laboratory trial batch, unless indicated otherwise.
2. For classes of concrete that require air-entrainment, test the trial batch at highest percentage of air allowed for that class of concrete.
3. Perform the following testing on each trial batch:
   a. Aggregate gradation for fine and coarse aggregates.
   b. Fly ash testing to verify meeting specified properties, unless fly ash Supplier submits certification by an independent testing laboratory.
   c. Slump.
   d. Air content.
   e. Compressive strength based on three cylinders each tested at seven days and at 28 days.
   f. Shrinkage test in accordance with this Section, for Class "A" concrete.
4. Submit for each trial batch the following information:
   a. Project identification name and number (if applicable).
   b. Date of test report.
   c. Complete identification of aggregate source of supply.
   d. Tests of aggregates for compliance with the Contract Documents.
   e. Scale weight of each aggregate.
   f. Absorbed water in each aggregate.
   g. Brand, type, and composition of cementitious materials.
   h. Brand, type, and amount of each admixture.
   i. Amounts of water used in trial mixes.
   j. Proportions of each material per cubic yard.
   k. Gross weight and yield per cubic yard of trial mixtures.
   l. Measured slump.
   m. Measured air content.
   n. Compressive strength developed at seven days and 28 days, from not less than three test cylinders cast for each seven day and 28 day test, and for each design mix.
   o. Shrinkage test results where required and as specified in this Section. Report results and averages for original length and at zero, seven, 14, 21, and 28 days of drying.

C. Certification of Concrete Mix:
1. The requirement for trial batch will be waived upon compliance with requirements of this Paragraph. Verify compressive strength of each specified mix by data from series of at least 30 consecutive tests that have been made within previous 12 months. Test is the average strength of all specimens of the same age fabricated from sample taken from a single batch of concrete. Tests shall have been made on concrete with identical mix design to mix design proposed for the Work, including sources of aggregate and manufacturers of cementitious materials and admixtures. Tests shall average

above specified strength with no individual test falling more than 500 psi below specified strength and no three consecutive tests averaging below specified strength. Standard deviation for series of tests shall not exceed 640 psi in accordance with ACI 214.

D. Concrete Coordination Conference:
   1. Conduct concrete coordination conference to review detailed requirements of CONTRACTOR's proposed concrete design mixes. CONTRACTOR shall organize and schedule the conference, and prepare and distribute to all parties attending conference minutes of the conference.
   2. Conference shall be held at mutually agreed upon date and time; conference shall be held at the Site unless otherwise mutually agreed upon. Notify all parties to attend concrete coordination conference not less than five days prior to scheduled date of conference.
   3. All parties involved in the concrete Work shall attend concrete coordination conference including, but not limited to, the following:
      a. CONTRACTOR.
      b. GFT representative and inspector.
      c. Reinforcing steel Subcontractor (if any) and reinforcing steel Supplier and detailer.
      d. Concrete Supplier.
      e. Admixture manufacturer's representative.
      f. ENGINEER.
      g. Resident Project Representative.

1.4 SUBMITTALS

A. Action Submittals: Submit the following:
   1. Shop Drawings:
      a. List of concrete materials and proportions for the proposed concrete mix designs. Include data sheets, test results, certifications, and mill reports to qualify the materials proposed for use in the mix designs. Do not start laboratory trial batch testing until this submittal is approved by ENGINEER.
      b. Laboratory Trial Batch Reports: Submit laboratory test reports for concrete cylinders, materials, and mix design tests.
      c. Ready-mixed Concrete: Submit the following information.
         1) Physical capacity of mixing plant.
         2) Trucking facilities available.
         3) Estimated average amount of the specified concrete that can be produced and delivered to the Site during a normal, eight-hour day, excluding output to other customers.
   2. Product Data:
      a. Manufacturers' specifications with application and installation instructions for proprietary materials and items, including admixtures and bonding agents.
   3. Samples:

a. Submit Samples of materials as specified and as requested by ENGINEER. Include with each Sample names of product and Supplier, and description.

B. Informational Submittals: Submit the following:
1. Certifications:
a. Notarized certification of conformance to reference standards used in this Section, when required by ENGINEER.
2. Delivery Tickets: Copies of all delivery tickets for each load of concrete delivered to or mixed at the Site. Each delivery tickets shall contain the information in accordance with ASTM C94 along with project identification name and number (if any), date, mix type, mix time, quantity and amount of water introduced.

1.5 PRODUCT DELIVERY, STORAGE, AND HANDLING

A. Transportation, Delivery, and Handling:
1. Materials used for concrete shall be clean and free from foreign matter during transportation and handling, and kept separate until measured and placed into concrete mixer.
2. Implement suitable measures during hauling, piling, and handling to ensure that segregation of coarse and fine aggregate particles does not occur and grading is not affected.

B. Storage:
1. For storage, provide bins or platforms with hard, clean surfaces.

PART 2 – PRODUCTS

2.1 GENERAL

A. All cementitious materials, admixtures, curing compounds, and other industrial-produced materials used in concrete, or for curing or repairing of concrete, that can contact potable water or water that will be treated to become potable shall be listed in NSF/ANSI 61.

2.2 CEMENTITIOUS MATERIALS

A. Cement:
1. Portland cement shall be Type II(MH) ASTM C150. Type I or Type II may be used in lieu of Type II(MH) when approved by ENGINEER.
2. Portland cement shall be produced by one facility. Alternate cement sources may be used provided that mix design has been approved and acceptable trial batch verifying performance has been made.
3. Do not use cement that has deteriorated because of improper storage or handling.

2.3 AGGREGATES

A. General:
   1. Aggregates shall conform to ASTM C33 normal weight, and as specified in this Section.
   2. Do not use aggregates containing soluble salts or other substances, such as iron sulfides, pyrite, marcasite, ochre, or other materials, that can cause stains on exposed concrete surfaces.

B. Fine Aggregate:
   1. Dune sand, bank run sand, and manufactured sand are unacceptable.

C. Coarse Aggregate:
   1. Provide clean, uncoated, processed aggregate containing no clay, mud, loam, or foreign matter, as follows:
      a. Crushed stone, processed from natural rock or stone.
      b. Coarse Aggregate Size: Size to be ASTM C 33, Nos. 57 or 67, except that No. 467 may be used for footings, foundation mats and walls 16-inches or greater in thickness.

2.4 WATER

A. Water used in producing and curing concrete shall be clean and free of injurious quantities of oils, acids, alkalis, organic materials, and other substances that may be deleterious to concrete and steel.

2.5 CONCRETE ADMIXTURES

A. Provide admixtures in accordance with product manufacturer's published instructions. Admixtures shall be compatible with each other. Admixtures shall not contain thiocyanates, shall not contain more than 0.05 percent chloride ion, and shall be non-toxic in the concrete mix after 30 days. Do not use admixtures that have not been incorporated and tested in the accepted mixes, unless otherwise approved by ENGINEER.

B. Air Entraining Admixtures: ASTM C260.
   1. Air entraining admixture shall be vinsol resin or vinsol rosin-based.

C. Water-Reducing Admixture: ASTM C494, Type A.
   1. Proportion Class "A", Class "AF", Class "AS", and Class "B" concrete with non-air entraining, normal setting, water-reducing, aqueous solution of modified organic polymer. Admixture shall not contain lignin, nitrates, or chlorides added during manufacturing.

D. High Range Water-Reducing Admixture (HRWR): ASTM C494, Type F/G.

1. Use high range water-reducing admixture in the concrete classifications so specified or indicated. Use of HRWR admixture is allowed at CONTRACTOR's option in all other classifications of concrete. When used, HRWR admixture shall be added to concrete in accordance with admixture manufacturer's published instructions. Specific admixture formulation shall be as recommended by admixture manufacturer for Project conditions.

E. Set Control Admixtures: In accordance with ASTM C494. Use the following as required:
   1. Type B, Retarding.
   2. Type C, Accelerating.
   3. Type D, Water reducing and Retarding.
   4. Type E, Water reducing and Accelerating.
   5. Type F, Water-reducing, high range admixtures.
   6. Type G, Water-reducing, high range, and retarding admixtures.

F. Calcium Chloride: Do not use calcium chloride.

G. Shrinkage Reducing Admixture:
   1. Shrinkage reducing admixture may be used in mix design when necessary to conform to specified shrinkage limitations, provided that specified strength requirements are complied with and there is no reduction in sulfate resistance in the concrete and no increase in concrete permeability.

2.6 PROPORTIONING AND DESIGN OF MIXES

A. Prepare design mixes of concrete. Mixes subject to the following limitations:
   1. Class A Concrete:
      a. Specified 28-day Compressive Strength: 4,000 psi.
      b. Maximum Water-Cement Ratio by Weight: 0.42.
      c.

Coarse Aggregate Number	Minimum Cement Content-Pounds Per Cubic Yard	Percent Air Content
57, 67	564	1.5 ± 1%
467	517	1.5 ± 1%

   2. Class B Concrete:
      a. Specified 28-day Compressive Strength: 3,000 psi.
      b. Maximum Water-Cement Ratio by Weight: 0.50.
      c.

Coarse Aggregate Number	Minimum Cement Content-Pounds Per Cubic Yard	Percent Air Content
57, 67	470	1.5 ± 1%

B. Adjustment to Concrete Mixes: Mix design adjustments may be requested by CONTRACTOR when characteristics of materials, Site conditions, weather, test results, or other circumstances warrant; at no additional cost to OWNER and as

approved by ENGINEER. Before using adjusted concrete mixes, laboratory test data and strength results shall be submitted to and approved by ENGINEER.

C. Admixtures:
   1. Use air-entraining admixture in concrete, unless otherwise shown or indicated. Add air-entraining admixture at admixture manufacturer's prescribed rate to produce concrete at point of placement having air content within prescribed limits.
   2. Use water-reducing or high-range water-reducing admixtures in all Class "A".
   3. Use amounts of admixtures recommended by admixture manufacturer for climatic conditions prevailing at the Site at time of placing. Adjust quantities and types of admixtures as required to maintain quality.

D. Slump Limits:
   1. Proportion and design mixes to result in concrete slump at the point of placement of not less than 1-inch and not more than 4-inches.
   2. Class "A" Concrete: Proportion and design mixes to result in concrete slump:
      a. Not more than 4-inches prior to adding high range water-reducer.
      b. Not more than 8-inches at point of placement after adding high range water-reducer. If superplasticizer or water-reducing admixtures are used, the mix shall be slumped at jobsite prior to the addition of the admixture.
   3. Class "B" Concrete: Proportion and design mixes to result in concrete slump at point of placement of not less than 1-inch and not more than 4-inches.

2.7 BONDING AGENT

A. Provide epoxy and epoxy-cement bonding agents in accordance with Section 031000, Concrete Forms and Accessories.

B. Product and Manufacturer: Provide one of the following:
   1. Sikadur 32, Hi-Mod LPL, as manufactured by Sika Corporation.
   2. DURAL LPL, as manufactured by the Euclid Chemical Company.
   3. Or equal.

2.8 CONCRETE CURING MATERIALS

A. Curing Compound: ASTM C 309 Type 1-D (water retention requirements):
   1. Product and Manufacturer: Provide one of the following:
      a. Super Aqua Cure VOX, as manufactured by The Euclid Chemical Company.
      b. Sealtight 1100, as manufactured by W.R. Meadows, Incorporated.
      c. MasterKure, as manufactured by Master Builders, Inc.
      d. Or equal.
   2. Provide red fugitive dye.

2.9 FINISHING AIDS

A. Evaporation Retardant:
   1. Product and Manufacturer: Provide one of the following:
      a. Confilm, by Master Builders.
      b. Eucobar, by Euclid Chemical Company.
      c. SikaFilm, by Sika Corporation.
      d. Or equal.

2.10 CRACK INJECTION MATERIALS

A. Structural Crack Repair System:
   1. Epoxy for Injection: Low-viscosity, high-modulus moisture insensitive type.
   2. Products and Manufacturers: Provide one of the following:
      a. Sikadur 35, Hi-Mod L.V. and Sikadur 31, Hi-Mod Gel, by Sika Corporation.
      b. Eucopoxy Injection Resin, by Euclid Chemical Company.
      c. Or equal.

B. Non-structural Crack Repair System:
   1. Hydrophobic Polyurethane Chemical Grout:
      a. Provide hydrophobic polyurethane that forms a flexible gasket.
      b. Products and Manufacturers: Provide one of the following:
         1) SikaFix HH LV, by Sika Chemical Company.
         2) Hydro Active Flex SLV, by De Neef Construction Chemicals, Inc.
         3) Or equal.
      c. Shrinkage limit shall not exceed 4.0 percent in accordance with ASTM D1042.
      d. Minimum elongation of 250 percent in accordance with ASTM D3574.
      e. Minimum tensile strength of 150 psi in accordance with ASTM D3574.

2.11 CONCRETE REPAIR MATERIALS

A. Concrete repair mortar shall be pre-packaged, polymer-modified cementitious repair mortar with the following minimum properties:
   1. Compressive Strength at One Day: 2,000 psi (ASTM C109).
   2. Compressive Strength at 28 Days: 6,000 psi (ASTM C109).
   3. Bond Strength at 28 Days: 1,800 psi (ASTM C882 modified).

B. Products and Manufacturers: Provide one of the following:
   1. Five Star Structural Concrete, by Five Star Products, Inc. Use formulation recommended by manufacturer for the specific application conditions.
   2. SikaTop 122 Plus, SikaTop 123 Plus, SikaTop 111 Plus, or Sikacem 133, by Sika Corporation. Use formulation from among those listed in this paragraph recommended by manufacturer for specific application conditions.
   3. Emaco S88-CA or S66-CR, by Master Builders Inc. Use formulation from among those listed in this paragraph recommended by manufacturer for specific application conditions.

4. Verticoat, Verticoat Supreme, or Euco SR-VO, by Euclid Chemical Company. Use formulation from among those listed in this paragraph recommended by manufacturer for specific application conditions.
5. Or equal.

C. Cement Mortar: Shall consist of mix of one part cement to 1.5 parts sand with sufficient water to form trowelable consistency. Minimum compressive strength at 28 days shall be 4,000 psi. Where required to match the color of adjacent concrete surfaces, blend white portland cement with standard portland cement so that, when dry, patching mortar matches the color of surrounding concrete.

PART 3 – EXECUTION

3.1 INSPECTION

A. Examine the substrate and conditions under which the Work will be performed and notify ENGINEER in writing of unsatisfactory conditions. Do not proceed with the Work until unsatisfactory conditions have been corrected.

3.2 CONCRETE MIXING

A. General:
   1. Concrete may be produced at batch plants or by the ready-mixed process. Batch plants shall comply with recommendations of ACI 304R and have sufficient capacity to produce concrete of qualities required and in quantities required to comply with the accepted Progress Schedule. All plant facilities are subject to acceptance of ENGINEER.
   2. Mixing:
      a. Mix concrete with a rotating type batch machine, except where hand mixing of very small quantities is approved by ENGINEER.
      b. Remove hardened accumulations of cement and concrete from drum and blades to ensure proper mixing action.
      c. Replace mixer blades upon loss of ten percent of mixer blades' original height.

B. Ready-Mix Concrete:
   1. Comply with ASTM C94 and the Contract Documents.
      a. Plant Equipment and Facilities: Conform to requirements of NRMCA certification.
      b. Mix concrete in revolving-type truck mixers that are in good condition and produce thoroughly-mixed concrete conforming to the Contract Documents.
      c. Do not exceed rated capacity of mixer.
      d. Mix concrete for minimum of two minutes after arrival at the Site, or as recommended by mixer manufacturer.
      e. Do not allow drum to mix while in transit.

f. Mix at proper speed until concrete is discharged from mixer.
g. Maintain adequate facilities at the Site for continuous delivery of concrete at required rates.
h. Provide access to mixing plant for ENGINEER upon request.

C. Maintain equipment in proper operating condition, with drums cleaned before charging each batch. Schedule rates of delivery to prevent delay of placing concrete after mixing, or holding dry-mixed materials too long in mixer before the adding water and admixtures.

3.3 TRANSPORTING CONCRETE

A. Transport and place concrete not more than 90 minutes after water has been added to the dry ingredients.

B. Avoid spilling and separation of concrete mixture during transportation.

C. Do not place concrete in which the ingredients have separated.

D. Do not retemper partially set concrete.

E. Use suitable equipment for transporting concrete from mixer to forms.

3.4 PREPARATION FOR CONCRETING

A. Submit to ENGINEER laboratory trial batch test results for proposed mixes at least 15 days prior to start of Work. Do not begin concrete production until associated laboratory trial batch test result submittal has been approved by ENGINEER.

B. Notify ENGINEER a minimum of 24 hours in advance of placing concrete to allow for inspection of form work, joints, waterstops, reinforcement, embedded items, and vapor retarders. The section to be placed shall be fully prepared for concrete placement at the time of notice. Confirm inspection status with ENGINEER a minimum of 4 hours prior to concrete placement. Do not begin placing concrete until Work is in conformance with the Contract Documents.

C. Subgrade surfaces shall be thoroughly wetted by sprinkling, prior to the placing of any concrete, and these surfaces shall be kept moist by frequent sprinkling up to the time of placing concrete thereon. The surface shall be free from standing water, mud, and debris at the time of placing concrete.

D. Reinforcing steel and embedded items shall be completely cleaned of mortar, loose rust, form release compounds, dirt, or any other substance which would interfere with proper bonding with concrete. Protective coatings on embedded aluminum items shall continuously cover the surface to be in contact with concrete. Any defects in the coating shall be repaired.

E. Do not place concrete until flow of water entering space to be filled with concrete has been properly stopped or has been diverted by pipes, or other means, and carried out of the forms, clear of the Work. Do not deposit concrete underwater, and do not allow water to rise on concrete surfaces until concrete has attained its initial set. Do not allow water to flow over concrete surface in manner and or velocity that will injure concrete surface finish. Provide temporary pumping or other dewatering operations for removing water as required.

F. Prepare joint surfaces in accordance with Section 031000, Concrete Forms and Accessories.

3.5 CONCRETE PLACEMENT

A. General:
   1. Place concrete continuously, so that no concrete will be placed on concrete that has hardened sufficiently to cause formation of seams or planes of weakness within the section. If section cannot be placed continuously, provide construction joints in accordance with Section 031000, Concrete Forms and Accessories.
   2. Deposit concrete as nearly as practical in its final location to avoid segregation due to rehandling or flowing. Do not subject concrete to action that may cause segregation.
   3. Screed concrete that is to receive other construction to proper level to avoid excessive skimming or grouting.
   4. Do not use concrete that becomes non-plastic and unworkable, or does not conform to required quality limits, or that has been contaminated by foreign materials. Do not use retempered concrete. Remove rejected concrete from the Site and dispose of it in conformance with Laws and Regulations.
   5. Do not place concrete until forms, bracing, reinforcing, and embedded items are each in final position and secure.
   6. Do not place footings in freezing weather unless adequate precautions are taken against frost action.
   7. Do not place footings, piers or pile caps on frozen soil.
   8. Unless otherwise instructed, place concrete only when ENGINEER is present.
   9. Allow minimum of three days between adjoining concrete placements.

B. Bonding for Next Concrete Pour:
   1. Prepare for bonding of fresh concrete to concrete that has set but is not fully cured, as follows:
      a. Thoroughly wet the surface, but allow no free-standing water.
      b. For horizontal surfaces place a six-inch layer of Construction Joint Grout, as specified in Section 036000, Grout, over the hardened concrete surface.
      c. Place fresh concrete before the grout has attained its initial set.

2. Accomplish bonding of fresh concrete to fully cured, hardened, existing concrete by using a bonding agent as specified in Section 03100, Concrete Forms and Accessories.

C. Concrete Conveying:
1. Handle concrete from point of delivery at the Site, transfer to concrete conveying equipment, and transfer to locations of final deposit as rapidly as practical by methods that prevent segregation and loss of concrete mix materials.
2. Provide mechanical equipment for conveying concrete to ensure continuous flow of concrete at delivery end of conveyor. Provide runways for wheeled concrete conveying equipment from concrete delivery point to locations of final deposit. Keep interior surfaces of conveying equipment, including chutes, free of hardened concrete, debris, water, snow, ice, and other deleterious materials.
3. Do not use chutes for distributing concrete, unless accepted by ENGINEER.
4. Pumping concrete is allowed, however do not use aluminum pipe for conveying concrete.

D. Placing Concrete into Forms:
1. Deposit concrete in forms in horizontal layers not deeper than 18 inches each and in manner that avoids inclined construction joints. Where placement consists of several layers, place concrete at such rate that concrete being integrated with fresh concrete while still plastic.
2. Do not allow concrete to free-fall within the form from height exceeding four feet. Where high-range water reducer is used to extend slump to at least six inches, maximum allowable free-fall of concrete is six feet. Use “elephant trunks” to prevent free-fall and excessive splashing of concrete on forms and reinforcing. Discontinue free-falls in excess of four feet if there is evidence of segregation.
3. Remove temporary spreaders in forms when concrete placing has reached elevation of such spreaders.
4. Consolidate concrete placed in forms by mechanical vibrating equipment supplemented by hand-spading, rodding, or tamping. Use equipment and procedures for consolidating concrete in accordance with applicable recommended practices in ACI 309. Vibration of forms and reinforcing is not allowed unless otherwise accepted by ENGINEER.
5. Where height of concrete placement in walls exceeds 14 feet, provide temporary windows in formwork to facilitate vibration. Properly close temporary windows when height of concrete approaches windows. Determine location, size, and spacing of temporary windows to suit equipment used.
6. Do not use vibrators to transport concrete inside of forms. Insert and withdraw vibrators vertically at uniformly-spaced locations not farther than the visible effectiveness of the vibrator. Place vibrators to rapidly penetrate the layer of concrete and at least six inches into the preceding layer. Do not insert vibrators into lower layers of concrete that have begun to set. At each

insertion, limit the duration of vibration to time necessary to consolidate concrete and complete embedment of reinforcing and other embedded items without causing segregation of concrete mix.

7. Do not place concrete in beam and slab forms until concrete previously placed in columns and walls is no longer plastic.
8. Prevent voids in the concrete. Force concrete under pipes, sleeves, openings, and inserts from one side until visible from the other side.

E. Placing Concrete Slabs:
1. Deposit and consolidate concrete slabs in continuous operation, within limits of construction joints, until placing of a slab panel or section is completed.
2. Consolidate concrete during placing operations using mechanical vibrating equipment, so that concrete is thoroughly worked around reinforcing and other embedded items and into corners.
3. Consolidate concrete placed in beams and girders of supported slabs, and against bulkheads of slabs on ground, as specified in this Article for formed concrete structures.
4. Bring slab surfaces to correct elevation and level. Smooth the surface, leaving surface free of humps or hollows. Do not sprinkle water on surface while concrete is plastic. Do not disturb slab surfaces prior to commencing concrete finishing.

F. Quality of Concrete Work:
1. Concrete shall be solid, compact, and smooth, and free of laitance, cracks, and cold joints.
2. Concrete for liquid-retaining structures, and concrete in contact with earth, water, or exposed directly to the elements shall be watertight.
3. Cut out and properly replace to extent directed by ENGINEER, or repair to satisfaction of ENGINEER, surfaces with cracks or voids, that are unduly rough, or are defective in any other way. Thin patches or plastering are unacceptable.
4. Leaks through concrete that exhibit flowing water, and cracks, holes, or other defective concrete in areas of potential leakage, shall be repaired and made watertight.
5. Repair, removal, and replacement of defective concrete as directed by ENGINEER shall be at no additional cost to OWNER.

G. Cold Weather Placing:
1. Protect concrete Work from physical damage or reduced strength that could be caused by frost, freezing, or low temperatures, in compliance with ACI 306 and the Contract Documents.
2. When air temperature has fallen to or may be expected to fall below 40 degrees F, provide adequate means to maintain temperature in area where concrete is being placed between 50 degrees F and 70 degrees F for at least seven days after placing. Provide temporary housings or coverings including tarpaulins or plastic film. Maintain temporary heating and protection as necessary so that ambient temperature does not fall more than 30 degrees F

in the 24 hours following the seven-day period. Avoid rapid dry-out of concrete due to overheating, and avoid thermal shock due to sudden cooling or heating.

3. When air temperature has fallen to or is expected to fall below 40 degrees F, uniformly heat water and aggregates before mixing for concrete as required to obtain concrete mixture temperature not less than 55 degrees F and not more than 85 degrees F at point of placement.
4. Do not use frozen materials or materials containing ice or snow. Do not place concrete on frozen subgrade or on subgrade containing frozen materials. Before placing concrete, verify that forms, reinforcing, and adjacent concrete surfaces are entirely free of frost, snow, and ice.
5. Do not use salt or other materials containing antifreeze agents. Do not use chemical accelerators or set-control admixtures unless approved by ENGINEER and tested in mix design proposed for use.

H. Hot Weather Placing:

1. When hot weather conditions exist that would impair the quality and strength of concrete, place concrete in compliance with ACI 305 and the Contract Documents.
2. When ambient air temperature is at or above 90 degrees F and rising, cool ingredients before mixing concrete to maintain concrete temperature at time of placement below 80 degrees F. When ambient air temperature is at or above 90 degrees F and falling, cool the ingredients before mixing concrete to maintain concrete temperature at time of placement below 85 degrees F. In no case shall the concrete temperature at time of placement exceed 90 degrees F.
3. Mixing water may be chilled, or chopped ice may be used to control concrete temperature provided the water equivalent of ice is calculated in total amount of mixing water. If required, reduce the time from addition of mix water to placement, or use set-retarding admixture.
4. Cover reinforcing materials with water-soaked burlap if ambient air temperature becomes too hot, so that reinforcing material temperature does not exceed ambient air temperature immediately before embedment of reinforcing in concrete.
5. Wet forms thoroughly before placing concrete.
6. Do not place concrete at temperature that causes difficulty from loss of slump, flash set, or cold joints.
7. Do not use set-control admixtures unless approved by ENGINEER in mix design.
8. Obtain ENGINEER's approval of substitute methods and materials proposed for use.

3.6 FINISHING OF FORMED SURFACES

A. Rough Form Finish:

1. Standard rough form finish shall be the concrete surface having the texture imparted by the form material used, with tie holes and defective areas repaired

and patched with mortar of 1 part cement to 1 1/2 parts sand and all fins and other projections exceeding 1/4-inch in height rubbed down or chipped off.

2. Use rough form finish for the following:
   a. Exterior vertical surfaces up to 1 foot below grade.
   b. Interior exposed vertical surfaces of liquid containers up to 1 foot below liquid level.
   c. Interior and exterior exposed beams and undersides of slabs.
   d. Other areas shown.

B. Smooth Form Finish:
   1. Produce smooth form finish by selecting form materials that will impart smooth, hard, uniform texture. Arrange panels in orderly and symmetrical manner with minimum of seams. Repair and patch defective areas in accordance with the Contract Documents.
   2. Use smooth form finish for the following:
      a. Exterior surfaces exposed to view.
      b. Surfaces to be covered with coating material. Coating material may be applied directly to concrete or may be a covering bonded to concrete such as waterproofing, damp-proofing, painting, or other similar system.
      c. Interior vertical surfaces of liquid-containers.
      d. Interior and exterior exposed beams and undersides of slabs.
      e. Surfaces to receive abrasive blasted finish.
      f. Surfaces to receive smooth rubbed or grout cleaned finish.
      g. Other areas shown or indicated.

C. Smooth Rubbed Finish:
   1. Provide smooth, Class A, rubbed finish to concrete surfaces which have received smooth form finish as follows:
      a. Moistening of concrete surfaces and rubbing with carborundum brick or other abrasive until a uniform color and texture is produced.
   2. Except where surfaces have been previously covered as specified above, use smooth rubbed finish for the following:
      a. Interior exposed walls and other vertical surfaces.
      b. Exterior exposed walls and other vertical surfaces down to 1 foot below grade.
      c. Interior and exterior horizontal surfaces, except exterior exposed slabs and steps.
      d. Interior exposed vertical surfaces of liquid containers down to 1 foot below liquid level.
      e. Other areas shown.

3.7 SLAB FINISHES

A. Float Finish:
   1. After placing concrete slabs, do not work the surface further until ready for floating. Begin floating when the surface water has disappeared or when the

concrete has stiffened sufficiently. Check and level the surface plane to a tolerance not exceeding 1/4-inch in 10 feet when tested with a 10 foot straightedge placed on the surface at not less than two different angles. Cut down high spots and fill all low spots. Uniformly slope surfaces to drains. Immediately after leveling, refloat the surface to a uniform, smooth, granular texture.

2. Use float finish for the following:
   a. Interior exposed horizontal surfaces of liquid containers, except those to receive grout topping.
   b. Exterior below grade horizontal surfaces.
   c. Surfaces to receive additional finishes, except as shown or specified.

B. Trowel Finish:
   1. After floating, begin first trowel finish operation using power-driven trowel. Begin final troweling when surface produces a ringing sound as trowel is moved over the surface.
   2. Consolidate concrete surface by the final hand troweling operation. Finish shall be free of trowel marks, uniform in texture and appearance, and with surface plane tolerance not exceeding 1/8-inch in ten feet when tested with a ten foot straight edge. Grind smooth surface defects that would otherwise project through applied floor covering system.
   3. Use trowel finish for the following:
      a. Interior exposed slabs, unless otherwise shown or indicated.
      b. Slabs that receive one of the following: resilient flooring, carpeting, or ceramic tile.

C. Non-Slip Broom Finish:
   1. Immediately after float finishing, slightly roughen concrete surface by brooming in direction perpendicular to main traffic route. Use fine fiber-bristle broom, unless otherwise directed by ENGINEER. Coordinate required final finish with ENGINEER before applying finish.
   2. Use non-slip broom finish for the following:
      a. Exterior exposed horizontal surfaces subject to lightweight foot traffic.
      b. Interior and exterior concrete steps and ramps.

3.8 CONCRETE CURING AND PROTECTION

A. General:
   1. Protect freshly placed concrete from premature drying and excessive cold or hot temperature, and maintain without drying at a relatively constant temperature for the period of time necessary for hydration of the cement and proper hardening of the concrete.
   2. Begin curing procedures immediately after placing and finishing concrete and as soon as free moisture has disappeared from the concrete surface. Continue final curing for at least ten (10) days and in accordance with ACI 301 procedures. For concrete sections over 30-inches thick, continue curing for

an additional seven (7) days, minimum. Avoid rapid drying at the end of the curing period.

B. Curing Methods:
   1. Provide liquid curing compound as follows:
      a. Apply the specified curing compound to all concrete surfaces when permitted by ENGINEER. All curing compounds shall be compatible with future toppings, paint, waterproofing and finishes. The compounds shall be applied immediately after final finishing in a continuous operation by power spray or roller equipment in accordance with the manufacturer's directions. Recoat areas which are subjected to heavy rainfall within three (3) hours after initial application. Maintain the continuity of the coating and repair damage to the coat during the entire curing period. For concrete surfaces which will be in contact with potable water, the manufacturer shall certify that the curing compound used is EPA approved.

C. Temperature of Concrete During Curing:
   1. Protect the concrete continuously for the concrete curing period. Provide hot weather protection complying with the requirements of ACI 305, unless otherwise specified. Provide cold weather protection complying with the requirements of ACI 306.
   2. Maintain concrete temperature as uniformly as possible, and protect from rapid atmospheric temperature changes. Avoid temperature changes in concrete which exceed 5°F in any one hour and 50°F in any 24 hour period.

D. Protection from Mechanical Injury:
   1. During the curing period, protect concrete from damaging mechanical disturbances including load stresses, heavy shock, excessive vibration, and from damage caused by rain or flowing water. Protect all finished concrete surfaces from damage by subsequent construction operations.

3.9 CONCRETE INSTALLATION TOLERANCES

A. Installation Tolerances:
   1. Concrete placement tolerances, unless otherwise specified in the Contract Documents, shall be in accordance with ACI 117.
   2. Notify ENGINEER in writing when concrete placement does not conform with required tolerances, as soon as the condition is known to CONTRACTOR.
   3. When concrete installation does not conform to required tolerances, do not repair or correct by grinding unless specified in the Contract Documents or approved by ENGINEER in writing.
   4. Verification Measurements:
      a. If surfaces where tolerances are in question, obtain measurements to verify conformance with tolerances in manner acceptable to ENGINEER.

b. If surfaces tolerances are in question, cost of obtaining measurements shall be at no additional cost to the OWNER.
c. Before obtaining measurements, obtain ENGINEER's acceptance of method proposed for obtaining measurements.
d. After obtaining measurements, submit measurements to ENGINEER.

5. Submit with verification measurements submittal proposed method to rectify out-of-tolerance concrete. Do not start repair Work without obtaining ENGINEER's approval.

3.10 FIELD QUALITY CONTROL

A. CONTRACTOR shall employ a testing laboratory to perform field quality control testing. ENGINEER will direct the number of tests and cylinders required. CONTRACTOR shall make standard compression test cylinders and entrained air tests as specified below, under the direct inspection by ENGINEER. CONTRACTOR shall furnish all necessary assistance required by ENGINEER. CONTRACTOR shall also furnish all labor, material and equipment required including cones, rods, molds, air tester, thermometer, curing in a heated storage box, and all other incidentals required. Above will be subject to approval by ENGINEER. CONTRACTOR shall furnish all necessary storage and curing, Testing Laboratory Services Furnished by CONTRACTOR, and transportation required by the testing.

B. Quality Control Testing During Construction:
1. Perform sampling and testing for field quality control during the placement of concrete, as follows:
a. Sampling Fresh Concrete: ASTM C 172.
b. Slump: ASTM C 143; one test for each concrete load at point of discharge; and one for each set of compressive strength test specimens.
c. Air Content: ASTM C 231; one for every other concrete load at point of discharge, or when required by an indication of change.
d. Compressive Strength Tests: ASTM C 39; one set of compression cylinders for each 50 cubic yards or fraction thereof, of each mix design placed in any one day or for each 2,500 square feet of surface area placed; one (1) specimen tested at seven (7) days, and two (2) specimens tested at 28 days.
1) Adjust mix if test results are unsatisfactory and resubmit for ENGINEER'S approval.
2) Concrete which does not meet the strength requirements is subject to rejection and removal from the Work, or to other such corrective measures as directed by ENGINEER, at the expense of CONTRACTOR.
e. Compression Test Specimens: ASTM C 31; make one (1) set of four (4) standard cylinders for each compressive strength test, unless otherwise directed.
1) Cast, store and cure specimens as specified in ASTM C 31.

f. Concrete Temperature: Test hourly when air temperature is 40°F and below, and when 80°F and above; and each time a set of compression test specimens is made.

2. The testing laboratory shall submit certified copies of test results directly to ENGINEER and CONTRACTOR after tests are made.

C. Evaluation of Quality Control Tests:

1. Do not use concrete delivered to the final point of placement which has slump or total air content outside the specified values.
2. Compressive strength tests for laboratory-cured cylinders will be considered satisfactory if the averages of all sets of three consecutive compressive strength tests results equal or exceed the 28 day design compressive strength of the type or class of concrete; and, no individual strength test falls below the required compressive strength by more than 500 psi.
   a. Where questionable field conditions may exist during placing concrete or immediately thereafter, strength tests of specimens cured under field conditions will be required by ENGINEER to check the adequacy of curing and protecting of the concrete placed. Specimens shall be molded at the same time and from the same samples as the laboratory cured specimens.
      1) Provide improved means and procedures for protecting concrete when the 28 day compressive strength of field- cured cylinders is less than 85 percent of companion laboratory-cured cylinders.
      2) When laboratory-cured cylinder strengths are appreciably higher than the minimum required compressive strength, field-cured cylinder strengths need not exceed the minimum required compressive strength by more than 500 psi even though the 85 percent criterion is not met.
      3) If individual tests of laboratory-cured specimens produce strengths more than 500 psi below the required minimum compressive strength, or if tests of field- cured cylinders indicate deficiencies in protection and curing, provide additional measures to assure that the load-bearing capacity of the structure is not jeopardized. If the likelihood of low-strength concrete is confirmed and computations indicate the load-bearing capacity may have been significantly reduced, tests of cores drilled from the area in question will be required at CONTRACTOR'S expense.
   b. If the compressive strength tests fail to meet the minimum requirements specified, the concrete represented by such tests will be considered deficient in strength and subject to replacement, reconstruction or to other action approved by ENGINEER.

D. Testing Concrete Structure for Strength:

1. When there is evidence that the strength of the in-place concrete does not meet specification requirements, CONTRACTOR shall employ at his expense the services of a concrete testing service to take cores drilled from hardened

concrete for compressive strength determination. Tests shall comply with ASTM C 42 and the following:

a. Take at least three (3) representative cores from each member or suspect area at locations directed by ENGINEER.
b. Strength of concrete for each series of cores will be considered satisfactory if their average compressive strength is at least 85 percent and no single core is less than 75 percent of the 28 day required compressive strength.
c. Report test results, in writing, to ENGINEER on the same day that tests are made. Include in test reports the Project identification name and number, date, name of CONTRACTOR, name of concrete testing service, location of test core in the structure, type or class of concrete represented by core sample, nominal maximum size aggregate, design compressive strength, compression breaking strength and type of break (corrected for length-diameter ratio), direction of applied load to core with respect to horizontal plane of the concrete as placed, and the moisture condition of the core at time of testing.

2. Fill core holes solid with non-shrink, high strength grout, and finish to match adjacent concrete surfaces.
3. Conduct static load test and evaluations complying with ACI 318 if the results of the core tests are unsatisfactory, or if core tests are impractical to obtain, as directed by ENGINEER.

3.11 MISCELLANEOUS CONCRETE ITEMS

A. Filling-In:
1. Fill-in holes and openings left in concrete structures for the passage of work by other contractors, unless otherwise shown or directed, after the work of other contractors is in place. Mix, place and cure concrete as herein specified, to blend with in-place construction. Provide all other miscellaneous concrete filling shown or required to complete the Work.

B. Curbs:
1. Provide monolithic finish to interior curbs by stripping forms while concrete is still green and steel-troweling surfaces to a hard, dense finish with corners, intersections, and terminations slightly rounded.
2. Exterior curbs shall have rubbed finish for vertical surfaces and a broomed finish for top surfaces.

C. Equipment Bases:
1. Unless specifically shown otherwise, provide concrete bases for all pumps and other equipment. Construct bases to the dimensions shown, or as required to meet manufacturers' requirements and Drawing elevations. Where no specific elevations are shown, unless noted otherwise, bases shall be 4-inches thick for electrical and control panels (housekeeping pads) and 12-inches thick for equipment pads and shall extend 3-inches outside the metal equipment base or supports. Reinforce pads with No. 5 at 12-inches O.C.

each-way minimum and dowel into slab with No. 5 at 12-inches around the perimeter of the pad.

2. Include all concrete equipment base work not specifically included under other Sections. CONTRACTOR shall define the need for electrical and control panel pads by reviewing the Electrical and Instrumentation (E & I) Drawings.
3. In general, place bases up to 1-inch below the metal base. Properly shim equipment to grade and fill 1-inch void with non-shrink grout as specified in Section 03 60 00, Grout.

3.12 REPAIR OF CONCRETE PLACED UNDER THIS CONTRACT

A. Repair of Formed Surfaces:
   1. Repair the following defects in all formed finishes:
      a. Spalls, air bubbles, rock pockets, form depressions, and other defects that are more than 1/4-inch in depth.
      b. Holes from tie rods and other form tie systems.
      c. Fins, offsets, and other projections that extend more than 1/4-inch beyond designated concrete member surface.
      d. Structural cracks, as defined by ENGINEER.
      e. Non-structural cracks greater than 0.010-inch wide as defined by ENGINEER. In liquid-retaining structures, elevated slabs subject to the elements or washdowns, below-grade members, and cracks that evidence leakage. Where it is not possible to verify whether a crack is leaking, repair the crack.
   2. Repair the following defects in smooth-finish surfaces, in addition to those listed above in this Section:
      a. Spalls, air bubbles, rock pockets, form depressions, and other defects that extend to more than 1/2-inch in width in any direction, no matter how deep.
      b. Spalls, air bubbles, rock pockets, form depressions, and other defects of any size that exceed three in number in a 12-inch by 12-inch area, or 12 in number in a three-foot by three-foot area.
      c. Fins, offsets, and other projections shall be completely removed and smoothed.
      d. Scratches and gouges in concrete surface.
      e. Texture and color irregularities. In liquid-retaining surfaces, texture and color irregularities need not be repaired when greater than 12 inches below minimum normal operating liquid surface elevation, except where such defects are indicative of reduced durability.
   3. Where smooth rubbed or grout cleaned finish is specified, minor surface defects repairable by the finishing process need not be repaired prior to finish application, when approved by ENGINEER.

B. Method of Repair of Formed Surfaces:
   1. Repair and patch defective areas with cement mortar immediately after removal of forms and as directed by ENGINEER.

2. Cut out honeycomb, rock pockets, voids over 1/2-inch diameter, and holes left by tie rods and bolts, down to solid concrete but, in no case, to a depth of less than 1-inch. Make edges of cuts perpendicular to the concrete surface. Before placing the cement mortar, thoroughly clean, dampen with water, and brush-coat the area to be patched with the specified bonding agent.
    a. For exposed-to-view surfaces, blend white portland cement and standard portland cement so that, when dry, the patching mortar color will match the color of the surrounding concrete. CONTRACTOR shall impart texture to repaired surfaces to match texture of existing adjacent surfaces. Provide test areas at inconspicuous locations to verify mixture, texture and color match before proceeding with the patching. Compact mortar in place and strike off slightly higher than the surrounding surface.
3. Cracks which require repair shall be pressure grouted using one of the following. Apply in accordance with the manufacturer's directions and recommendations.
    a. Sikadur 35, Hi-Mod L.V. and Sikadur 31, Hi-Mod Gel, as manufactured by Sika Corporation Company.
    b. Euco Epoxy #452 Epoxy System, as manufactured by The Euclid Chemical Company.
    c. Or equal.
4. Fill holes extending through concrete by means of a plunger- type gun or other suitable device from the least exposed face, using a flush stop held at the exposed face to ensure completely filling.
5. Sandblast exposed-to-view surfaces that require removal of stains, grout accumulations, sealing compounds, and other substances marring the surfaces. Use sand finer than No. 30 and air pressure from 15 to 25 psi.

C. Repair of Unformed Surfaces:
1. Test unformed surfaces, such as monolithic slabs, for smoothness and to verify surface plane to specified tolerances for each surface and finish. Correct low and high areas in accordance with this Section.
2. Test unformed surfaces sloped to drain for trueness of slope, in addition to smoothness, using template having the required slope. Correct high and low areas in accordance with this Section.
3. Repair finish of unformed surfaces containing defects that adversely affect concrete durability. Surface defects include crazing, cracks in excess of 0.01-inch wide, spalling, popouts, honeycombs, rock pockets, and other objectionable conditions.
4. Repair structural cracks in all structures and non-structural cracks in liquid-retaining structures. In liquid-retaining structures, where dry face of concrete member can be observed, repair all cracks evidencing any rate of water flow through crack. Where dry face of member cannot be observed, repair all cracks.

D. Methods of Repair of Unformed Surfaces:

1. Correct high areas in unformed surfaces by grinding, after the concrete has cured sufficiently so that repairs can be made without damage to adjacent areas.
2. Correct low areas in unformed surfaces during, or immediately after completion of surface finishing operations by cutting out the low areas and replacing with fresh concrete. Finish repaired areas to blend into adjacent concrete. Use one of the following. Apply in accordance with the manufacturer's directions and recommendations.
   a. Euco Poly-Patch, as manufactured by The Euclid Chemical Company.
   b. Sikatop 122, as manufactured by Sika Corporation.
   c. Or equal.
3. Repair defective areas, except random cracks and single holes not exceeding 1-inch diameter, by cutting out and replacing with fresh concrete. Remove defective areas to sound concrete with clean, square cuts, and expose reinforcing steel with at least 3/4-inch clearance all around. Dampen all concrete surfaces in contact with patching concrete and brush with the specified bonding agent. Place patching concrete before grout takes its initial set. Mix patching concrete of the same materials and proportions to provide concrete of the same type or class as the original adjacent concrete. Place, compact and finish as required to blend with adjacent finished concrete. Cure in the same manner as adjacent concrete.
4. Repair isolated random cracks, and single holes not over 1-inch diameter, by the dry-pack method. Groove the top of cracks, and cut out holes to sound concrete and clean of dust, dirt and loose particles. Dampen all cleaned concrete surfaces and brush with the specified bonding agent. Place dry-pack before the cement grout takes its initial set. Mix dry-pack, consisting of 1 part portland cement to 2-1/2 parts fine aggregate passing a No. 16 mesh sieve, using only enough water as required for handling and placing. Compact dry-pack mixture in place and finish to match adjacent concrete. Keep patched areas continuously moist for not less than 72 hours.
5. Cracks which require repair shall be pressure grouted using one of the following. Apply in accordance with the manufacturer's directions and recommendations.
   a. Sikadur 35, Hi-Mod L.V. and Sikadur 31, Hi-Mod Gel, as manufactured by Sika Corporation.
   b. Euco Epoxy #452 Epoxy System, as manufactured by The Euclid Chemical Company.
   c. Or equal.
6. Assure that surface is acceptable for flooring material to be installed in accordance with manufacturer's recommendations.

E. Other Methods of Repair:

1. Repair methods not specified in this Section may be used when approved by ENGINEER.

+ + END OF SECTION + +

SECTION 035500

ADHESIVE BONDING MATERIAL SYSTEMS FOR STRUCTURAL APPLICATIONS

PART 1 – GENERAL

1.1 DESCRIPTION

A. Section Includes:
   1. Use of adhesive bonding material systems for structural applications including: bonding reinforcing bars and all thread rods in concrete using epoxy adhesive.

B. Related Sections:
   1. Section 032000, Concrete Reinforcing

1.2 REFERENCES

A. Standards referenced in this Section are:
   1. American National Standards Institute (ANSI) Standard B212.5-Carbide Tipped Masonry Drills and Blanks for Carbide Tipped Masonry Drills
   2. American Society for Testing and Materials (ASTM), ASMT C881/C881M Specification for Epoxy-Resin-Base Bonding Systems for Concrete. Steel Structures Painting Council (SSPC), SP-10 Near-White Blast Cleaning.

1.3 SUBMITTALS

A. Submit the following information in accordance with the drawings, except as specified herin.

B. Product Data:
   1. Product literature and material safety data sheets.
   2. Product installation instructions.

C. Test Reports:
   1. Mill test reports per subparagraph 1.4B.1
   2. Certificates of Compliance for commercial products per subparagraph 1.4B.2

1.4 QUALITY REQUIREMENTS

A. Take responsibility for quality control in the contract drawings, except as specified herin.

B. Provide materials conforming to the designated ASTM requirements.
   1. Submit certified copies of mill test reports for all structural steel.
   2. Submit Certificates of Compliance with the specification for all commercial products, including industry standardized products.

1.5 DELIVER,STORAGE, AND HANDLING

A. Storage of Epoxy Components:
   1. Store epoxy components on pallets or shelving in a covered-storage area.
   2. Control temperature to within manufacturer's recommendations and dispose of the product if shelf life has expired.
   3. If stored at temperatures are outside the manufacturer's recommendation, test components prior to use to determine if they still meet specified requirements.

PART 2 – PRODUCTS

2.1 MATERIALS

A. Like Items of Materials:
   1. Use end products of one manufacturer in order to achieve structural compatibility and singular responsibility.

B. Adhesive Bonding Material System
   1. Use epoxy resin base anchoring adhesive with a valid ICC or IAPMO report. The epoxy material must be approved for the use or application.
   2. Each package shall be clearly marked with the following information:
      a. Manufacturer's name and address
      b. Product Name
      c. Date of Manufacture
      d. Expiration Date
      e. Batch or Lot Number
   3. Each package shall include the manufacturer's instructions for anchor and dowel installation. These instructions shall include the following information:
      a. Diameter of drilled holes for applicable anchor and dowel sizes
      b. Cleaning procedure for drilled holes, including a description of permitted and prohibited equipment and techniques.
      c. Allowable temperature ranges for storage, installation, and curing.
      d. Identification of acceptable mixing/dispensing nozzles.
      e. Fabrication requirements for anchors and dowels.
      f. Description of tools permitted or required for installation and service and repair manuals for each tool.
      g. Method of identifying properly proportioned and mixed adhesive materials.
      h. Time and temperature schedule for initial set and full-strength cure.
      i. Special requirements for special installation conditions such as damp holes, or horizontal orientation of the anchor or dowel.

C. All thread rods and anchor bolts
   1. As specified in Section 051200 Structural Steel.

D. Reinforcing Bars
   1. As specified in Section 032000 Concrete Reinforcing.

PART 3 – EXECUTION

3.1 GENERAL

A. Ensure that the equipment used to install adhesive-bonded anchors and dowels is in conformance with the recommendations of the manufacturer.
B. Ensure that the concrete members receiving adhesive-bonded anchors or dowels are structurally sound and free of cracks in the vicinity of the anchor or dowel to be installed.

3.2 HOLE SIZING AND INSTALLATION

A. Drilling Holes:
    1. Do not damage or cut existing reinforcing bars, electrical conduits, or other items embedded in the existing concrete without acceptance by ENGINEER.
    2. The location of reinforcing bars, or other obstructions shall be determined with a non-destructive indicator device.
B. Hole Drilling Equipment:
    1. Unless other equipment is recommended by the adhesive manufacturer, use a rotary hammer drill and bit.
    2. Drill Bits: Carbide-tipped in accordance with ANSI B212-15.
    3. Hollow drill bits with flushing air systems are preferred. Air supplied to hollow drill bits shall be free of oil, water, or other contaminants which will reduce bond.
    4. Where edge distances are less than 2 inches, use lighter impact equipment to prevent microcracking and concrete spalling during drilling process.
C. Hole Diameter:
    1. Drill holes per adhesive manufacturer recommendations but as a minimum, not less than 105% nor more than 150% of the diameter of the steel bar anchor.
D. Obstructions in Drill Path:
    1. If an existing reinforcing bar or other obstruction is hit while drilling hole, stop drilling hole and fill the hole with drypack mortar. Relocate the hole to miss the obstruction and drill another hole. Repeat the above until the hole has been drilled to the required depth.
    2. Avoid drilling an excessive number of holes in an area of a structural member which would excessively weaken the structural members and endanger the stability of the structure. When required, drypack holes which hit obstructions and allow drypack to reach strength equal to the existing concrete before drilling adjacent holes. Epoxy grout may be substituted for drypack when acceptable to ENGINEER.
    3. When existing reinforcing steel is encountered during drilling and when acceptable to ENGINEER, enlarge the hole by 1/8-inch, core through the existing reinforcing steel at the larger diameter, and resume drilling at original hole diameter.

4. Bent Bar Dowels: Where edge distances are critical, and striking reinforcing steel is likely, and if acceptable to ENGINEER, drill hole at 10-degree angle or less from axis of reinforcing bar or all thread rod being installed.

E. Cleaning Holes:
   1. Clean and prepare drilled holes in accordance with the manufacturer's recommendations.
   2. As a minimum, utilize the following procedure:
      a. Insert long air nozzle into hole and blow out loose dust. Use air which is free of oil, water, or other contaminants which will reduce bond.
      b. Use a stiff bristle brush to vigorously brush hole to dislodge compacted drilling dust.
         1) Use a non-metallic bristle brush and avoid over-brushing to prevent polishing the inside surface of the drilled hole.
      c. Repeat above steps as required to remove drilling dust or other material which will reduce bond. The hole shall be clean and dry.

F. Cleaning Reinforcing Bars and All Thread Rods
   1. Degrease and sandblast reinforcing bars or all thread rods over embedment length to near-white metal in accordance with Steel Structures Painting Council, SP-10 finish. The reinforcing bar or all thread rod shall be free of oil, grease, paint, dirt, mill scale, rust, or other coatings that will reduce bond.

G. Installing of Anchors or Dowels
   1. Install anchors or dowels to depth, spacings, and locations as indicated on the Plans or per the manufacturer's instructions for the specific condition. Particular attention shall be given to requirements and/or limitations due to anchor position, dampness, ambient temperature, and curing.

H. Filling Hole with Epoxy
   1. Fill hole with epoxy before inserting the reinforcing bar or all thread rod. Fill hole with epoxy starting from back of the hole. Fill hole without creating air voids.
   2. Fill the hole with sufficient epoxy to fill the drilled hole to within ¼ inch of the concrete surface measured after placement of the steel bar or anchor. Adequate epoxy shall be provided such that excess epoxy is extruded out of the hole when the reinforcing bar or all thread rod is inserted into the hole.
   3. Do not install epoxy prior to receiving epoxy manufacturer's onsite training.

3.3 MANUFACTURER'S SERVICES

A. Furnish manufacturer's representative to conduct jobsite training for proper installation, handling, and storage of epoxy, for personnel who will perform actual installation.

3.4 FIELD QUALITY CONTROL

A. The STRUCTURAL INSPECTOR may perform quality control functions to verify that the Materials and workmanship are in accordance with the requirements of the Specifications and the placement requirements of the Plans have been met.
B. Inspection will be performed by the STRUCTURAL INSPECTOR to verify compliance with all related codes, Specifications, regulations and permits.
    1. Inspection by the STRUCTURAL INSPECTOR is not a substitute for quality control by the Contractor.

+ + END OF SECTION + +

SECTION 055300

METAL GRATING

PART 1 – GENERAL

1.1 DESCRIPTION

A. Section Includes:
   1. Furnish and install galvanized steel grating at floors, platforms and steps as shown on the Contract Drawings and specified herein.
B. Related Sections:
   1. Section 051200, Structural Steel

1.2 REFERENCES

A. Standards referenced in this Section are:
   1. ANSI/AWS A 2.4 - Standard Symbols for Welding, Brazing and Nondestructive Examination.
   2. AWS D 1.1 - Structural Welding Code.
   3. ANSI/NAAMM MBG 531 - Metal Bar Grating Manual.

1.3 PERFORMANCE REQUIREMENTS

A. Load design: ANSI/NAAMM MBG 532.
B. Maximum Allowable Deflection Under Live Load: 1/160 of the span length.
C. Minimum Design Live Load: 150 pounds per square foot, unless otherwise shown or specified.

1.4 SUBMITTALS

A. Shop, Fabrication and Erection Drawings: The Contractor shall submit complete shop, fabrication, and erection drawings with assembly details to the Construction Manager for approval. Fabrication or construction of the grating shall not be started until the drawings have been approved. Such approval shall not relieve the Contractor of any responsibility under the contract for the successful completion of the work.
B. Certifications: Submit AISC Certificate indicating that the fabricator plant meets the specified steelwork category.
C. Product Data: Provide span and deflection tables, and manufacturer’s data for hinges.
D. Samples: Submit two samples, 12" x 12" in size illustrating surface finish and texture.
E. Manufacturer's Specifications and Installation Instructions: Submit copies of manufacturer's specifications and installation instructions for the cross bars, longitudinal bearing bars, steel plate, and grating panels. Include laboratory test reports and other data as required to show compliance with these Specifications.

1.5 QUALIFICATIONS

A. Welders' Certificates: Provide certification that welders to be employed in the work have satisfactorily passed the AWS qualification within the previous 12 months. If recertification of welders is required, retesting will be the Contractor's responsibility.

1.6 FIELD MEASUREMENTS

A. Verify that field measurements are indicated as such on the shop drawings.

1.7 QUALITY ASSURANCE

A. Inspection and Testing: Inspection and testing shall comply with NAAMM MBG 531 "Metal Bar Grating Manual" as modified by the following:
   1. Quality control inspections shall be performed by the Contractor to the extent specified, and additionally, any other testing and inspections necessary to control production quality shall be made. Quality assurance inspections will be performed by the Construction Manager.
   2. Initial testing for quality control is to be followed by quality assurance testing. All repairs shall be tested in the same manner. Further assembly is prohibited until quality assurance acceptance is given by the Construction Manager.
   3. Certified mill reports shall be submitted, showing chemical and physical properties of the materials to be used.
   4. Non-Destructive Testing: Field welds will be inspected by nondestructive tests at the site of erection. The Construction Manager shall be notified, in writing, not less than 15 calendar days in advance, when any shop or field welding is to be undertaken so that arrangements for inspection may be made.

1.8 DELIVERY, STORAGE AND HANDLING

A. Deliver materials to the site at such intervals to ensure uninterrupted progress of the work.

B. Store materials to permit access for inspection and identification. Keep members off the ground, using pallets, platforms, or other supports. Protect steel members and packaged materials from weather damage. Do not store materials in a manner that might cause distortion or damage to the members or the supporting structures. Repair or replace damaged materials as directed at no additional expense to NJT.

PART 2 – PRODUCTS

2.1 MATERIALS

A. Steel: Longitudinal bearing bars and cross bars shall conform to ASTM A 36.
B. Protective Treatment: Grating shall be hot-dipped galvanized in accordance with the requirements of ASTM A 123. The grating shall be galvanized after all fabrication operations are complete.

2.2 ACCESSORIES

A. Bolts: 5/8" diameter hexagonal head bolts, hot-dipped galvanized.
B. Perimeter Closure: Of same material as grating.

2.3 FABRICATION

A. Fabrication of steel structures including, but not limited to, finishing, and shaping, steel, protective treatment, sheet steel, cross bars, bearing bars, shop assembly, tests, marking and shipping shall conform to NAAMM MBG 531 "Metal Bar Grating Manual".
B. Welding shall conform to the Structural Welding Code, AWS D 1.1.
C. Grating Type: ANSI/NAAMM MBG 531, Welded Type.
D. Weld joints of intersecting metal sections.

2.4 FINISHES

A. Clean surfaces of rust, scale, grease, and foreign matter prior to galvanizing.
B. Do not galvanize surfaces in direct contact with concrete or where field welding is required.
C. Where field welding is required, field galvanize areas after completion of welding in accordance with ASTM A780.

PART 3 – EXECUTION

3.1 INSPECTION

A. Examine the areas and conditions under which metal grating work is to be installed. Do not proceed with the work until unsatisfactory conditions have been corrected and approved by the Construction Manager.

3.2 ERECTION

A. Erection of metal grating including, but not limited to, handling and storage of materials, falsework, methods, and equipment, assembling metal grating and connections shall conform to NAAMM MBG 531 "Metal Bar Grating Manual" and to the following:
    1. Falsework and all tools, machinery and appliances, including driftpins, and fitting up bolts necessary for the expeditious handling of the work, erection of the metal work,

removal of the temporary construction, and all work necessary to complete the structure shall be provided. The location of reinforcing bars, or other obstructions shall be determined with a non-destructive indicator device.

3.3 SKID RESISTANCE

A. The upper edges of all members forming the wearing surface of floors, platforms and steps grating shall be serrated.

3.4 ARRANGEMENT OF SECTIONS

A. The sections shall extend over not less than three panels and the ends of abutting units shall be welded over their full cross-sectional area, or otherwise connected to provide full continuity in accordance with the design. Grating panel lengths shall be 20 feet where possible. Inspection will be performed by the STRUCTURAL INSPECTOR to verify compliance with all related codes, Specifications, regulations and permits.

3.5 PROVISION FOR CAMBER

A. Unless otherwise provided on the plans, provision for camber shall be made as follows:
   1. Steel units so rigid that they will not readily follow the camber required shall be cambered in the shop. The beveled bars shall be continuous and fillet welded along the centerline of the stringer flange; in which case, the design span length shall be governed by the width of the bearing bar instead of the width of the stringer flange.
   2. Longitudinal stringers, except as provided in the following paragraph, shall be mill cambered or provided with bearing strips so that the completed floor after dead load deflection will conform to the longitudinal camber shown on the plans.

3.6 FIELD ASSEMBLY

A. Areas of considerable size shall be placed and, if necessary, adjusted to proper fit before the floor is connected to its supports. Care shall be taken during lifting and placing to avoid overstressing the metal grating units. The main elements shall be made continuous as specified in Article 3.4, and sections shall be connected together along their edges by welding or bolting in accordance with the plans or the approved shop, fabrication and erection drawings.

3.7 CONNECTION TO SUPPORTS

A. Except when other connection methods are shown on the Contract Drawings or approved, the floor shall be connected to its steel supports by welding every fourth main element to the supporting member; however, welds shall be spaced no greater than 15 inches on centers. Before any welding is done, the floor shall either be temporarily loaded or it shall be clamped down to make a tight joint with full bearing. To minimize the stresses induced through clamping down, any differential elevation of ¼ inch or more over a 4 foot

supporting member shall be shimmed before welding the shim, the metal grating, and the supporting member.

B. Around the perimeter of continuous units of metal grating, the ends of all the main steel members of the flooring shall be securely fastened together by means of steel plates or angles welded to the ends of the main members.

3.8 REPAIRING DAMAGED GALVANZIED COATINGS

A. Galvanized surfaces that are abraded or damaged at any time after the application of the zinc coating shall be repaired in accordance with ASTM A780 by thoroughly wire brushing the damaged areas and removing all loose and cracked coating, after which the cleaned areas shall be painted with two applications of unthinned commercial quality zinc-rich primer (organic vehicle type). Spray cans shall not be used.

PART 4 – MEASUREMENT AND PAYMENT

4.1 PAYMENT

A. All costs associated with Steel Grating shall be compensated for in the schedule of bid items under Division 5 titled "Metal Grating" and shall be made per square foot.

B. The bid shall be full compensation for furnishing and installing the grating, welds, connections, cross bars, longitudinal bearing bars, galvanizing, all labor, materials, tools and equipment, and all else necessary therefore and incidental thereto.

4.2 MEASUREMENT

A. Work covered by this Section shall be measured by the square foot.

+ + END OF SECTION + +

SECTION 055120

ANCHOR BOLTS AND POST-INSTALLED ANCHORS

PART 1 – GENERAL

1.1 DESCRIPTION

A. Section Includes:
   1. Anchor bolts and Post-Installed anchors
B. Related Sections:
   1. Section 032000, Concrete Reinforcing
   2. Section 035500, Adhesive Bonding Material Systems for Structural Applications

1.2 SUBMITTALS

A. Shop Drawings:
   1. Setting drawings and templates for location and installation of anchorage devices.
   2. Copies of manufacturer's specifications, load tables, dimension diagrams and installation instructions for anchorage devices.
B. Certifications for adhesive anchor installers.

1.3 QUALITY ASSURANCE

A. Reference Standards:
   1. ASTM F593, Standard Specification for Stainless Steel Bolts, Hex Cap Screws, and Studs.
   2. ASTM F594, Standard Specification for Stainless Steel Nuts.
B. Post-installed anchors: ICC-ES or IAPMO-ES approved.
C. Each installer shall be certified in writing by the manufacturer to be qualified to install adhesive anchors.

PART 2 – PRODUCTS

2.1 MATERIALS

A. Anchor Bolts:
   1. Stainless steel anchor bolts: ASTM F593 and ASTM F594, AISI Type 316, complete with washers and nuts, unless otherwise indicated. Other AISI types may be used, subject to ENGINEER'S approval.
   2. For equipment, provide anchor bolts which meet the equipment manufacturer's recommendations for size, material, and strength.

B. Epoxy Adhesive Post-Installed Anchors:
   1. Stainless steel threaded anchor rods: ASTM F593 and ASTM F594, AISI Type 316, complete with washers and nuts.
   2. Epoxy adhesive anchors: Threaded rods anchored with an adhesive system into hardened concrete. The adhesive system shall use a two-component adhesive mix. Adhesive shall be injected with a static mixing nozzle following manufacturer's instructions. The embedment depth of the threaded rod shall provide a minimum allowable bond strength that is equal to the allowable steel tensile capacity of the threaded rod, unless noted otherwise on the drawings.
   3. Do not use for vertical overhead installations.
   4. Approved Product and Manufacturer adhesive system into concrete:
      a. HIT-RE 500-V3 Epoxy Adhesive, by Hilti.
      b. SET-3G Epoxy Adhesive, by Simpson Strong-Tie Co., Inc.
      c. Or approved equal

C. Powder actuated fasteners, expansion anchors, and other types of bolts and fasteners not specified herein shall not be used, unless approved by ENGINEER.

2.2 DESIGN CRITERIA

A. When the size, length or load carrying capacity of an anchor bolt, expansion anchor, or concrete insert is not shown, provide the size, length and capacity required to carry the design load using a minimum safety factor of four.

B. Determine design loads as follows:
   1. For equipment anchors, use the design load recommended by the manufacturer and approved by the ENGINEER.
   2. For pipe hangers and supports, use one half the total weight pipe, fittings, valves, accessories and water contained in pipe, between the hanger or support in question and adjacent hangers and supports on both sides.
   3. Allowance for vibration is included in the safety factor specified above.

PART 3 – EXECUTION

3.1 EXAMINATION

A. Examine areas and conditions under which anchor bolts, and post-installed anchors are to be installed, and notify Engineer of conditions detrimental to proper and timely completion of work.

B. Do not proceed with work until unsatisfactory conditions have been corrected in a manner acceptable to Engineer.

3.2 INSTALLATION

A. Protect anchor threads and shank from damage during installation of equipment and metal framing.
B. Anchor Bolts:
    1. Locate and accurately set the anchor bolts using templates or other devices as necessary.
    2. Comply with required embedment length and necessary anchor bolt projection.
C. Epoxy Adhesive Anchors:
    1. Drill holes in hardened concrete or grout to the adhesive anchor system manufacturer's recommended diameter and depth to develop the required pullout resistance, but not greater in diameter than 1/4-inch more than the anchor diameter nor less than 12 times the anchor diameter in depth, unless shown otherwise.
    2. Drill holes by methods which will not interfere with proper bonding of the adhesive. Use rotary percussion drilling with carbide bit to avoid cutting embedded reinforcing steel.
    3. Locate reinforcing steel in the vicinity of proposed holes prior to drilling. Adjust the location of holes to be drilled to avoid drilling through or nicking any existing reinforcing bars. Holes in adjusted locations may be drilled only after approval by the ENGINEER.
    4. Holes shall be brushed and blown clean with clean, dry compressed air to remove all dust and loose particles. Conform to the adhesive system manufacturer's printed installation instructions.
    5. Inject adhesive into the hole through the injection system-mixing nozzle (and any necessary extension tubes) placed to the bottom of the hole. Withdraw the discharge end as resin is placed but keep immersed to prevent formation of air pockets. Fill hole to a depth that ensures that excess material is expelled from the hole during anchor rod placement.
    6. Twist anchor rods during insertion into the partially filled hole so as to guarantee full wetting of the bar surface with adhesive. Insert anchor rods slowly to avoid developing air pockets.
    7. Adhesive anchor manufacturer's representative shall observe and demonstrate the proper installation procedures for the adhesive anchors and adhesive material at no additional cost to OWNER. Each installer shall be certified in writing by the manufacturer to be qualified to install the adhesive anchors.

3.3 CLEANING

A. After embedding concrete is placed, remove protection and clean bolts and inserts.

3.4 FIELD QUALITY CONTROL

A. Testing of Epoxy Adhesive Anchors:
   1. Employ the services of an independent testing laboratory to perform field quality testing of epoxy adhesive anchors. A minimum of 10 percent (but no less than 8 anchors) shall be chosen at random by the testing laboratory and confirmed by the ENGINEER. Unless otherwise directed by the ENGINEER, anchors shall be tensioned to 60 percent of the specified yield strength. Where anchors are located less than eight dowel diameters from the edge of concrete the Engineer will determine the tensile load required for the test.
   2. Provide access for the testing agency to places where work is being produced so that required inspection and testing can be accomplished.
   3. Contractor shall be responsible for the failure of any anchor. If any anchor fails, the testing shall be increased to 20 percent (but no less than 16 anchors) and may be increased further after review by the Engineer.
   4. Correct improper workmanship, remove and replace, or correct as directed by the ENGINEER, all anchors found unacceptable or deficient, at no additional cost to the OWNER.
   5. Pay for all corrections and subsequent tests required to confirm the integrity of the anchors.
   6. The independent testing and inspection agency shall complete a report for each area. The report shall summarize the observations made by the Inspector and be submitted to the ENGINEER.

+ + END OF SECTION + +

SECTION 051200

STRUCTURAL STEEL

PART 1 - GENERAL

1.1 DESCRIPTION

A. Scope:
   1. CONTRACTOR shall provide all labor, materials, equipment, and incidentals required to furnish and install the structural steel, including surface preparation and shop priming, as shown and specified.
   2. Structural steel is that Work defined in AISC "Code of Standard Practice", Section 2, and as shown. The Work also includes:
      a. Providing openings in and attachments to structural steel to accommodate the Work under this and other Sections, and providing for the structural steel all items such as anchor bolts, studs and all items required for which provision is not specifically included under other Sections.

B. Coordination:
   1. Review installation procedures under other Sections and coordinate the Work that must be installed with or attached to the structural steel.

C. Related Sections:
   1. Section 036000, Grout.
   2. Section 055001, Miscellaneous Metal Fabrications.
   3. Section 099000, Painting (Specification for Surface Preparation and Shop Priming is under Section 099000).
   4. Installation of anchor bolts for column pedestals.
   5. Installation of embedded plates for steel framing.

1.2 QUALITY ASSURANCE

A. Standard Specifications and Details:
   1. CONTRACTOR shall conform to all applicable requirements of Sections Nos. 515 and 770 of the Uniform Standard Specifications for Public Works Construction by the Maricopa Association of Governments (MAG) as supplemented by Pinal County. Where there is a conflict between MAG Standard specifications, as supplemented by Pinal County, and this Specification, provisions of this Specification shall govern.

B. Reference Standards and Codes: Comply with applicable provisions and recommendations of the following, except as otherwise shown or specified:
   1. ASTM A36, Standard Specification for Carbon Structural Steel.

2. ASTM A53, Standard Specification for Pipe, Steel, Black and Hot-Dipped, Zinc-Coated, Welded and Seamless.
3. ASTM A108, Cold Finished Carbon Steel Bars and Shafting.
4. ASTM A167, Standard Specification for Stainless and Heat-Resisting Chromium-Nickel Steel Plate, Sheet and Strip.
5. ASTM A276, Standard Specification for Stainless Steel Bars and Shapes.
6. ASTM A307, Standard Specification for Carbon Steel Bolts, Studs and Threaded Rod 60,000 PSI Tensile Strength.
7. ASTM A320, Standard Specification for Alloy-Steel and Stainless Steel Bolting for Low-Temperature Service.
8. ASTM F3125, High Strength Bolts for Structural Steel Joints, Including Suitable Nuts and Plain Hardened Washers.
9. ASTM A490, Quenched and Tempered Alloy Steel Bolts for Structural Steel Joints.
10. ASTM A500, Cold Formed Welded and Seamless Carbon Steel Structural Tubing in Rounds and Shapes.
11. ASTM A992, Structural Steel Shapes for use in Building Framing.
12. AWS D1.1, Structural Welding Code.
13. AISC, Manual of Steel Construction.
14. AISC, Code of Standard Practice for Steel Buildings and Bridges.
15. AISC, Specifications for the Design, Fabrication, and Erection of Structural Steel for Buildings and including the Commentary and Supplements thereto as issued.
16. AISC, Specifications for Structural Joints using ASTM F3125 or 490 Bolts, approved by the Research Council on Riveted and Bolted Structural Joints (RCRBSJ) of the Engineering Foundation.

C. Design of Members and Connections:
1. All details shown are typical; similar details apply to similar conditions, unless otherwise shown or specified. Verify dimensions at the site without causing delay in the Work.
2. CONTRACTOR shall examine conditions under which structural steel is to be provided and notify ENGINEER, in writing, of unsatisfactory conditions existing or whenever design of members and connections may not be clearly indicated. Do not proceed with the Work until unsatisfactory conditions or deficiencies have been corrected in a manner acceptable to ENGINEER.

D. Source Quality Control:
1. Materials and fabrication procedures shall be subject to inspection and tests in the mill, shop, and field, conducted by a qualified inspection agency. Such inspections and tests will not relieve the CONTRACTOR of responsibility for providing materials and fabrication procedures in compliance with specified requirements.
2. Fabrication shall be performed by a structural steel fabricating plant possessing a current certificate from AISC stating that the plant satisfies the requirements

for certification for Category STD of the AISC Quality Certification Program or being listed as an approved fabricator by Pinal County. The fabrication plant shall maintain this certification for the entire time fabrication for this project is being performed.

E. Qualifications for Welding Work:
   1. Qualified welding processes and welding operators in accordance with AWS "Structural Welding Code" D1.1, Section 5, Qualification.
   2. Provide certification that all welders, employed on or to be employed for the Work, have satisfactorily passed AWS qualification tests within the previous 12 months. CONTRACTOR shall ensure that all certifications are kept current.

1.3 SUBMITTALS

A. Shop Drawings: Submit for approval the following:
   1. Submit for approval Shop Drawings including complete details and schedules for fabrication and shop assembly of members and details, schedules, procedures and diagrams showing the sequence of erection.
      a. Include details of cuts, connections, camber, holes, and other pertinent data. Indicate welds by standard AWS symbols, and show size, length, and type of each weld.
      b. Provide setting drawings, templates, and directions for the installation of anchor bolts and other anchorages.
   2. Submit for approval, copies of manufacturer's specifications and installation instructions for products listed below. Include laboratory test reports and other data as required to show compliance with the Contract Documents.
      a. Structural steel of each type, including certified copies of mill reports covering the chemical and physical properties.
      b. High-strength bolts of each type, including nuts and washers.
      c. Unfinished bolts and nuts.
      d. Shop primer and touch-up field primer paint.

1.4 PRODUCT DELIVERY, STORAGE, AND HANDLING

A. Deliver materials to the site at such intervals to ensure uninterrupted progress of the Work.
   1. Deliver anchor bolts and anchorage devices, which are to be embedded in cast-in-place concrete or masonry, in ample time to not delay that Work.

B. Store materials to permit easy access for inspection and identification. Keep steel members off the ground, using pallets, platforms, or other supports. Protect steel members and packaged materials from corrosion and deterioration.

1. Do not store materials on the structure in a manner that might cause distortion or damage to the members or the supporting structures. Repair or replace damaged materials or structures as directed.

PART 2 - PRODUCTS

2.1 MATERIALS

A. Plates for W-Shape members and structural tubes: A572, Grade 50.

B. W-Shape members: A992, Grade 50.

C. Structural tubes (HSS): A500, Grade C, 50 ksi.

D. Other rolled sections (angles, channels, plates, etc.) – Dry Condition: ASTM A36, except where other type steel is shown.

E. Rolled Steel Plates, Shapes, and Bars – Wet Conditions: AISI Type 316 Stainless Steel. Unless otherwise shown on the Drawings.

F. Anchor Rods/Bolts Dry Conditions: ASTM F1554, Grade 36, non-headed type, unless otherwise shown or specified

G. Anchor Rods/Bolts Wet Conditions: AISI Type 316 Stainless Steel unless otherwise shown on the drawings.

H. Headed Stud Type Shear Connectors: ASTM A108, Grades 1010-1020, with dimensions complying with AISC Specifications, or equal.

I. Unfinished Threaded Fasteners: ASTM A307, Grade A, regular low-carbon steel bolts and nuts.
   1. Provide hexagonal heads and nuts for all connections.

J. High-Strength Threaded Fasteners: Heavy hexagonal structural bolts, heavy hexagon nuts, and hardened washers, as follows:
   1. Quenched and tempered medium-carbon steel bolts, nuts and washers, complying with ASTM F3125; or

K. Electrodes for Welding: E70XX complying with AWS D1.1, Design of New Buildings.

L. Surface Preparation and Shop Priming: All structural steel shall be primed in the shop. Surface preparation and shop priming are included herein but are specified in Section 099000, Painting.

2.2 FABRICATION

A. Shop Fabrication and Assembly:
   1. General:
      a. Fabricate and assemble structural assemblies in the shop to the greatest extent possible. Fabricate items of structural steel in accordance with AISC, Manual of Steel Construction, and as shown on the Shop Drawings. Provide camber in structural members as shown.
      b. Properly mark and match-mark materials for field assembly. Fabricate for delivery sequence which will expedite erection and minimize field handling of materials.
      c. Where finishing is required, complete the assembly, including welding of units, before start of finishing operations. Provide finish surfaces of members exposed in the final structure free of markings, burrs, and other defects.

B. Connections:
   1. Shop Connections:
      a. Unless otherwise shown, shop connections may be welded or high strength bolted. Unless shown otherwise, all welds shall be 1/4-inch minimum.
      b. Wherever reaction values of a beam are not shown, the connections shall be designed to support the total uniform load capacity tabulated in the AISC tables for allowable loads on beams for the given shape, span, and steel specified for the beam in question.
      c. Shop welded connections shall be designed to eliminate or minimize eccentricity. The size, extent, location and type of all shop welds shall be clearly shown on the Shop Drawings by use of AWS Standard notations and symbols.
      d. End connection angles fastened to the webs of beams and girders and the thickness of the angles, size and extent of fasteners or shop welds shall conform to tables of "Framed" and "Heavy Framed" beam connections in the AISC Manual. All connections shall be two sided, unless otherwise shown.
   2. Field Connections:
      a. All field connections, unless otherwise specified below or noted, shall be made with high strength bolts, and shall be bearing type connections.
      b. Field welding is permitted only where noted or approved by the ENGINEER.
   3. High-Strength Bolted Construction:
      a. Install high-strength threaded fasteners in accordance with AISC "Specifications for Structural Joints using ASTM F3125 or A490 Bolts" (RCRBSJ).
      b. High strength bolt design shear values shall be as specified in the AISC Manual for bolts with threads in the shear plane.

c. The minimum size of bolts shall be 3/4-inch diameter, unless otherwise noted.

4. Welded Construction: Comply with AWS Code for procedures, appearance and quality of welds, and methods used in correcting welding work.
   a. Assemble and weld built-up sections by methods which will produce true alignment of axes without warp.
5. Where rigid connections are required by the stresses shown, web shear reinforcement and stiffeners in accordance with AISC Specifications shall be provided.
6. All moment connections shall be designed for bending moments shown and shall conform to the details shown.
7. Shear Connectors: Install stud shear connectors in accordance with AWS D1.1, and as recommended by the manufacturer.

C. Columns: Column shafts shall have "finished" bearing surfaces at the base and at all splice lines.

D. Structural Tubing: Structural tubing shall be properly sealed to protect the internal surfaces.

E. Holes and Appurtenances for Other Work:
   1. Provide holes required for securing other Work to structural steel framing and for the passage of other Work through steel framing members, as shown on the Shop Drawings. If large block-outs are required and approved, the webs shall be reinforced to develop specified shears. Provide threaded nuts welded to framing, and other specialty items as shown, to receive other Work.
   2. Cut, drill, or punch holes perpendicular to metal surfaces. Do not flame cut holes or enlarge holes by burning. Drill holes in bearing plates.
   3. Coordinate as specified in Paragraph 1.1.B.

PART 3 - EXECUTION

3.1 ERECTION

A. General: Comply with the AISC Specifications and Code of Standard Practice, and as herein specified.

B. Surveys: Provide services of a registered surveyor to check lines and elevations of concrete and masonry bearing surfaces, and locations of anchor bolts and similar devices before steel erection proceeds. Discrepancies shall be reported immediately to the ENGINEER. Do not proceed with erection until corrections have been made, or until compensating adjustments to the structural steel work have been agreed upon with the ENGINEER.

C. Temporary Shoring and Bracing: Provide temporary shoring and bracing members with connections of sufficient strength to bear imposed loads. Remove temporary members and connections when permanent members are in place and final connections are made. Provide temporary guy lines to achieve proper alignment of the structures as erection proceeds.

D. Temporary Planking: Provide temporary planking and working platforms as necessary to effectively complete the Work. CONTRACTOR shall provide sufficient planking to meet OSHA requirement of a tightly planked substantial floor within two stories or 30 feet, whichever is less, below each tier of steel beams on which Work is performed.

E. Anchor Rods/Bolts: Furnish anchor rods/bolts and other connectors required for securing structural steel to foundations and other in-place Work.
   1. Furnish templates and other devices as necessary for presetting bolts and other anchors to accurate locations.
   2. Refer to Division 3, Concrete, for anchor bolt installation requirements in concrete.

F. Setting Bases and Bearing Plates: Clean concrete and masonry bearing surfaces of bond-reducing materials and roughen to improve bond to surfaces. Clean the bottom surface of base and bearing plates.
   1. Set loose and attached base plates and bearing plates for structural members on steel wedges or other adjusting devices.
   2. Tighten the anchor bolts after the supported members have been positioned and plumbed. Do not remove wedges or shims, but if protruding, cut off flush with the edge of the base or bearing plate prior to packing with grout.
   3. Place grout between bearing surfaces and bases or plates as specified in Section 036000, Grout. Finish exposed surfaces, protect installed materials, and allow to cure in strict compliance with the manufacturer's instructions, or as otherwise required.
   4. Leveling plates and wood wedges will not be permitted.

G. Field Assembly: Set structural frames accurately to the lines and elevations indicated. Align and adjust the various members forming a part of a complete frame or structure before permanently fastening. Clean bearing surfaces and other surfaces which will be in permanent contact before assembly. Perform necessary adjustments to compensate for discrepancies in elevations and alignment.
   1. Level and plumb individual members of the structure within tolerances as specified in AISC Manual. For members requiring accurate alignment, clip angles, lintels and other members, these members shall be provided with slotted holes for horizontal adjustment at least 3/8-inch in each direction, or more when required.
   2. Splice members only where shown or specified.

H. Erection Bolts: On exposed welded construction, remove erection bolts, fill holes with plug welds and grind smooth at exposed surfaces.

I. Comply with AISC Manual for bearing, adequacy of temporary connections, alignment, and the removal of paint on surfaces adjacent to field welds.
   1. Do not enlarge unfair holes in members by burning or by the use of drift pins, except in secondary bracing members. Ream holes that must be enlarged to admit bolts.

J. Gas Cutting: Do not use gas cutting torches in the field for correcting fabrication errors in the structural framing. Cutting will be permitted only on secondary members which are not under stress, as acceptable to the ENGINEER. Finish gas-cut sections equal to a sheared appearance when permitted.

K. Touch-Up Painting:
   1. Unless otherwise specified below, comply with all requirements of touch-up painting in Section 099000, Painting.
   2. Immediately after erection, clean field welds, bolted connections, and all damaged and abraded areas of the shop paint. Apply paint to exposed areas with the same material as used for shop painting. Apply by brush or spray to provide a minimum dry film thickness of 2.0 mils.

+ + END OF SECTION ++

SECTION 053000

METAL DECK

PART 1 - GENERAL

1.1 DESCRIPTION

A. Scope:
   1. Provide all labor, materials, equipment, and incidentals required to furnish and install galvanized metal roof decking, as shown on the Drawings and specified.
   2. Metal roof decking work shall include roof sump pans, cant strips, ridge and valley plates, and metal closure strips. The Work also includes:
      a. Cutting and flashing of openings to accommodate the Work under this and other Sections, and providing for the metal roof decking all items required for which provision is not specifically included under other Sections.
   3. Finish painting shall be as specified in Section 099000, Painting.

B. Coordination:
   1. Review installation procedures under other Sections and coordinate the Work that must be installed with or attached to the metal roof decking.

1.2 QUALITY ASSURANCE

A. Manufacturer shall have a minimum of five years of experience in the production of substantially similar roof decking, and shall be able to show evidence of satisfactory operation in at least five installations.

B. Reference Standards and Codes: Comply with applicable provisions and recommendations of the following, except as otherwise shown or specified:
   1. AISI, North American Specification for the Design of Cold-Formed Steel Structural Members.
   2. AWS D1.1/D1.1M, Structural Welding Code-Steel.
   3. SDI, Design Manual for Composite Decks, Form Decks, and Roof Decks.
   4. ASTM A 36/A 36M, Specification for Carbon Structural Steel.
   5. ASTM A 653/A 653M, Specification for Steel Sheet, Zinc-Coated (Galvanized) or Zinc-Iron Alloy – Coated (Galvanealed) by the Hot-Dip Process.
   6. ASTM A 924/ A 924M, Specification for General Requirements for Steel Sheet, Metallic-Coated by the Hot-Dip Process.
   7. MIL-P-21035, Paint High Zinc Dust Content, Galvanizing Repair.

C. Unless otherwise specified or shown on the Drawings on the Drawings, design, fabrication and erection shall be in accordance with AISI "North American Specification for the Design of Cold-Formed Steel Structural Members". Steel

decking shall be delivered, stored, handled and installed in such a manner that it will not be damaged or deformed.

D. Design of Decking and Connections:
   1. All details shown are typical; similar details apply to similar conditions, unless otherwise shown on the Drawings or specified. Verify dimensions at the site without causing delay in the Work.

E. Qualifications for Welding Work:
   1. Qualify welding processes and welding operators in accordance with AWS "Structural Welding Code" D1.1/D1.1M, Section 5, Qualification.
   2. Provide certification that all welders employed on or to be employed for the Work have satisfactorily passed AWS qualification tests within the previous 12 months. Ensure that all certifications are kept current.
   3. All welds will be subject to visual inspection. Where visually deficient welds are observed, the welds will be tested using non-destructive methods by a certified testing laboratory. If welds are found to be satisfactory, OWNER will pay for testing. Where welds are found unacceptable or deficient, testing costs belong to CONTRACTOR. Responsibility also belongs to CONTRACTOR to correct improper workmanship, remove and replace, or correct as instructed, all welds found unacceptable or deficient, and to pay for all corrections and subsequent tests required to confirm the integrity of the weld.

1.3 PERFORMANCE REQUIREMENTS

A. Compute the properties of metal roof deck sections on the basis of the effective design width as limited by the provisions of the AISI Specifications. Provide not less than the deck section properties shown on the Drawings, including section modulus and moment of inertia per foot of width.

B. Allowable Deflection: Design and fabricate deck for a maximum deflection of 1/240 of the clear span under the total uniform dead and live load.

1.4 SUBMITTALS

A. Shop Drawings: Submit for approval the following:
   1. Shop Drawings showing layout of deck panels, anchorage details and every condition requiring closure panels, supplementary framing, special jointing, or other accessories.
   2. Submit complete erection drawings, including type of decking section, adaptations around openings, and other special conditions, method of welding sections to supporting structural steel, procedure for attaching end closure plates and butt joint cover plates, and miscellaneous flashing.
   3. Where the steel beams or decking are to support loads, framing, monorails, hangers or any other items effecting design and detailing of connections, CONTRACTOR shall obtain Shop Drawings from all subcontractors, review these Shop Drawings, coordinate all interrelated work and submit a complete

combined submittal to the ENGINEER for written approval prior to the start of the metal roof decking Work.

4. The CONTRACTOR shall submit the preventive maintenance information package as part of the shop drawing submittal package to the ENGINEER for review and approval.

PART 2 - PRODUCTS

2.1 MATERIALS

A. Galvanized Steel Sheet: ASTM A 653, Grade 50. Before forming, the steel shall receive a protective metal coating of zinc conforming to ASTM A 653, with a minimum of 0.5-ounce zinc per square foot. The decking shall be 20-gauge, unless otherwise shown on the Drawings.

B. Deck sections shall be as shown on the Drawings on the Drawings. Decking having cross-sectional properties, which differ from the indicated, may be used provided that the structural properties of the proposed decking, when combined with the required concrete fill, are equal to or greater than, the structural properties of the decking indicated. The diaphragm shear values established by testing shall be equal to shear values established for the decking indicated.

C. Decking, where shown on the Drawings, shall have sheet lengths that cover three or more spans wherever practicable.

D. Accessories shall be formed of the same material as used for the steel deck.

E. Miscellaneous Steel Shapes: ASTM A 36/A 36M.

F. Galvanizing Repair Paint: High zinc-dust content paint for repair of damaged galvanized surfaces complying with Military Specifications MIL-P-21035.

G. Flexible Closure Strips for Deck: Manufacturer's standard vulcanized, closed-cell, synthetic rubber.

H. Product and Manufacturer: Provide one of the following:
   1. ASC Steel Deck.
   2. Vulcraft.
   3. Verco Manufacturing.
   4. Or equal.

2.2 FABRICATION

A. General: Form deck units in lengths to span three or more supports with flush, telescoped, or nested 2-inch end laps and nesting side laps, unless otherwise shown on the Drawings. Provide deck configurations complying with SDI "Basic Design Specifications", and as specified herein.

B. Wide-Rib Deck: Depth approximately 1-1/2-inches; ribs spaced approximately 6-inches on center; width of rib opening at roof surface not more than 2-1/2-inches; width of bottom rib surface not less than 1-3/4-inches.

C. Deep-Rib Deck: Depth approximately 3-inches, ribs spaced approximately 8-inches on center; width of rib opening at roof surface not more than 2-3/4-inches; width of bottom rib surface not less than 1-1/2-inches.

D. Metal Closure Strips:
   1. Fabricate metal closure strips of not less than 20 gage galvanized sheet steel of the same quality as the deck units. Form to the configuration required to provide tight-fitting closures at open ends and sides of decking.

PART 3 - EXECUTION

3.1 INSPECTION

A. Examine conditions under which decking is to be installed, and notify ENGINEER, in writing, of unsatisfactory conditions existing or whenever design of decking and connections may not be clearly indicated. Do not proceed with the Work until unsatisfactory conditions or deficiencies have been corrected in a manner acceptable to ENGINEER.

3.2 WORKMANSHIP

A. Prior to commencement of any Work, the decking manufacturer shall furnish an affidavit certifying to the yield strength, unit design stress and gauge of the metal, which will be used for the decking fabrication, and test-established diaphragm shear values for the decking supplied using indicated connections.

B. Metal roof decking shall be installed according to the manufacturer's recommendations. The decking manufacturer's recommendations, as approved by the Engineer, are hereby made a part of the Contract Documents.

C. Failure to conform to this requirement shall be ample justification for rejection of the material.

D. Steel decking shall be provided complete, including all cutting, shaping, fitting, drilling, welding, ridge plates, valley plates, reinforcing plates for all openings in the deck, and miscellaneous pieces necessary for proper installation and weather tight construction.

E. Special care shall be exercised not to damage or overload the decking during installation. The maximum uniform distribution load shall not exceed 20 psf. The decking shall not be used for storage or as a working platform until the sheets have been welded into position. Decking stored at the site before erection shall be

stacked on platforms or pallets and covered with tarpaulins or other suitable weathertight covering.

F. Deck units shall not be placed on supporting members until all connections are completed and the supporting assembly has its final design strength and capacity.

G. Decking shall be installed in a continuous operation to avoid delays in construction.

H. The steel deck units shall be placed on the supporting framework, aligned, and adjusted to final position before being permanently fastened.

I. If the supporting beams are not properly aligned or sufficiently level to permit proper bearing of steel units, take corrective action to ensure properly aligned Work.

J. The decking sheet shall be formed at the longitudinal sides in such a manner that they will overlap and/or interlock, and preclude the possibility of the dripping of any cement paste from the concrete placed on it. All interlocking seams shall be button punched at 12-inches on center, unless shown otherwise on the Drawings. End laps shall occur over bearings only.

K. Where the end of sheets overlap, they shall be die-formed in such manner that the sheet in the next row telescopes and snugly overlaps the sheet laid previously; end overlaps at bearings shall not be less than 2-inches. Sheets that abut at supports without overlapping may be provided, in which case, steel underlapping die-formed sleeves, having a minimum width of 2-inches, shall be provided to connect the abutting sheets. Where the ends of the decking sheets abut without overlapping at the supports, each end of the decking sheets shall have a minimum bearing of 3-inches on the supports and shall be welded to the supports as the underlapping sleeve connectors are installed.

L. The steel decking shall provide a continuous uniform slope, with practically flush top surfaces, and shall be installed in straight and continuous rows, as far as practicable, with ribs at right angles to the supporting members.

M. Sheets for wide-rib deck shall be 36-inches wide, and sheets for deep-rib deck shall be 24-inches wide. Narrower closure the strips shall not be less than 18-inches wide for wide-rib deck, and not less than 16 inches wide for deep rib deck. Closure strips shall be welded to adjacent full sheet with 1-inch long seam welds at 12-inches on center.

N. Flashing: Provide zinc coated continuous flashing for deck units at openings and at deck perimeters, if necessary, in order to contain concrete fill. Flashing shall be detailed and installed to prevent concrete leakage.

O. Connection Plates: Provide 14-gauge galvanized bent plate sections as shown on the Drawings or required over perimeter and interior framing to allow specified welding to parallel supports.

P. Where suspended ceilings occur, appropriate hanger supports shall be provided; coordinate with ceiling system manufacturer and installer.

Q. After erection, all damaged surfaces shall be primed with a zinc dust type primer paint.

R. All Work not in conformance with these Specifications and/or generally accepted standards of the trade shall be deemed defective by the ENGINEER and shall be rejected. All Work, which is defective, shall be corrected or replaced as directed by the ENGINEER. Corrections, redesign, and replacement of defective Work shall be at CONTRACTOR'S expense.

S. After erection, all surfaces shall be cleaned and left free of all grime and dirt. Decking shall be cleaned with solvents, if necessary, to provide a surface which will readily bond with concrete fill. Remove unused materials, tools, scaffolding, and debris from the premises, and leave the area broom clean.

3.3 INSTALLATION

A. General:
   1. Install roof deck units and accessories in accordance with manufacturer's recommendations and approved Shop Drawings, and as specified herein.

B. Placing Roof Deck Units:
   1. Place roof deck units on supporting steel framework and adjust to final position with ends bearing on supporting members and accurately aligned end to end before being permanently fastened. Lap ends not less than 2-inches. Do not stretch or contract the side-lap interlocks. Place deck units flat and square, secured to adjacent framing without warp or excessive deflection.
   2. Coordinate and cooperate with structural steel erector in locating decking bundles to prevent overloading of structural members.
   3. Do not use deck units for storage or working platforms until permanently secured.

C. Fastening Deck Units:
   1. Steel deck units shall be fastened to steel framework by the arc welding process or approved metal deck fasteners. Welds shall be free of sharp points or edges. All welds shall be cleaned immediately, by chipping or wire brushing, and shall be coated with a zinc dust type primer paint.
   2. Welding shall conform to the applicable requirements of the AISI “North American Specification for the Design of Cold-Formed Steel Structural Members”. All welding shall be done by qualified welders. Welder qualifications shall be in accordance with AWS “Structural Welding Code” D1.1/D1.1M, Section 5, Qualification.
   3. Decking sheets shall be fastened to the steel framework at all intermediate supports perpendicular to the deck ribs by 1/2-inch diameter fusion area puddle welds at each deck rib, unless otherwise shown on the Drawings.

4. Weld deck units to parallel framing supports with 1/2-inch diameter fusion area puddle welds at 12-inches on center, unless otherwise shown on the Drawings.
5. Welding at diaphragm boundaries shall be 1/2-inch diameter fusion area puddle welds at 12-inches on center, unless otherwise shown on the Drawings.
6. Weld all connection angles and plates to supporting members and decking with 1/2-inch diameter fusion welds at 12-inches on center, unless otherwise shown on the Drawings.
7. Any weld found to be defective shall be replaced before concrete is placed. Decking shall be erected and properly aligned prior to welding.

D. Cutting and Fitting:
1. Cut and fit roof deck units and accessories around other work projecting through or adjacent to the roof decking, as shown on the Drawings. Provide neat, square and trim cuts.

E. Reinforcement at Openings:
1. Provide additional metal reinforcement and closure pieces as required for strength, continuity of decking and support other work, unless otherwise shown on the Drawings.
2. Reinforce roof decking around openings less than 15-inches in any dimension by means of a flat steel sheet placed over the opening and fusion welded to the top surface of the deck. Provide steel sheet of the same quality as the deck units, not less than 20 gage, and at least 12-inches wider and longer than the opening. Provide welds at each corner and spaced not more than 12-inches on center along each side.

F. Closure Strips:
1. Provide metal closure strips at all open uncovered ends and edges of roof decking, and in the voids between decking and other construction. Weld into position to provide a complete decking installation.
   a. Provide flexible closure strips, instead of metal closures, at CONTRACTOR'S option, wherever their use will ensure complete closure. Install with adhesive in accordance with manufacturer's instructions.

G. Roof Insulation Support:
1. Provide metal closure strips for the support of roof insulation where the rib openings in the top surface of roof decking occur adjacent to edges and openings. Weld closure strips into position.

H. Touch-Up Painting:
1. Unless otherwise specified below, comply with all requirements of touch-up painting specified in Section 099000, Painting.
2. After roof decking installation has been completed, wire brush, clean and paint scarred and damaged areas, welds and rust spots on the supporting steel members in accordance with Section 099000, Painting.

3. Touch-up galvanized top and bottom surfaces of decking units with manufacturer’s recommended galvanizing repair paint applied in accordance with the manufacturer's instructions and recommendations.

+ + END OF SECTION + +

SECTION 055010

METAL FABRICATIONS

PART 1 - GENERAL

1.1 DESCRIPTION

A. Scope:
   1. Provide all labor, materials, equipment and incidentals as shown on the Drawings, specified and required to furnish miscellaneous metal fabrications, including surface preparation and shop priming.

B. The extent of miscellaneous metal fabrications Work is shown on the Drawings and includes items fabricated from iron, steel and aluminum shapes, plates, bars, castings and extrusions, which are not a part of the structural steel or other metal systems covered by other Sections of these Specifications.

C. The types of miscellaneous metal items include, but are not limited to the following:
   1. Bollards.
   2. Miscellaneous Framing and Supports.

1.2 QUALITY ASSURANCE

A. Reference Standards: Comply with the applicable provisions and recommendations of the following, except as otherwise shown and specified:
   1. ASTM A36, Specification for Carbon Structural Steel.
   2. ASTM A153, Specification for Zinc Coating (Hot-Dip) on Iron and Steel Hardware.
   3. ASTM A240, Specification for Heat-Resisting Chromium and Chromium-Nickel Stainless Steel Plate, Sheet and Strip for Pressure Vessels.
   4. ASTM A320, Specification for Alloy Steel Bolting Material for Low Temperature Service.
   5. ASTM A 500, Specification for Cold-Formed Welded and Seamless Carbon Steel Structural Tubing in Rounds and Shapes.
   6. ASTM B209, Specification for Aluminum and Aluminum-Alloy Sheet and Plate.
   7. ASTM B211, Specification for Aluminum and Aluminum-Alloy Bars, Rods and Wire.
   8. ASTM B221, Specification for Aluminum-Alloy Extruded Bars, Rods, Wire, Shapes and Tubes.
   9. ANSI A14.3, Safety Requirements for Fixed Ladders.
   10. AWS D1.1, Structural Welding Code.
   11. NAAMM, Metal Finishes Manual.
   12. OSHA.

B. Field Measurements:
   1. Take field measurements where required prior to preparation of Shop Drawings and fabrication to ensure proper fitting of the Work.

C. Shop Assembly:
   1. Preassemble items in the shop to the greatest extent possible, so as to minimize field splicing and assembly of units at the project site. Disassemble units only to the extent necessary for shipping and handling limitations. Clearly mark units for reassembly and coordinated installation.

1.3 SUBMITTALS

A. Samples: Submit for approval the following:
   1. Sets of representative samples of materials including nosings, rungs and other finished products as may be requested by ENGINEER. ENGINEER'S review will be for color, texture, style, and finish only. Compliance with all other requirements is exclusive responsibility of CONTRACTOR.

B. Shop Drawings: Submit for approval the following:
   1. Fabrication and erection details of all assemblies of miscellaneous metal Work. Include plans, elevations, and details of sections and connections. Show anchorage and accessory items. Include setting drawings and templates for location and installation of miscellaneous metal items and anchorage devices.
   2. Copies of manufacturer's specifications, load tables, dimension diagrams, anchor details, and installation instructions for products to be used in miscellaneous metal Work.

PART 2 - PRODUCTS

2.1 MATERIALS

A. Steel Plates, Shapes and Bars: ASTM A36.

B. Hollow Structural Steel Shapes: ASTM A500, Grade C 50 ksi.

C. Aluminum:
   1. Alloy and Temper: Provide alloy and temper as shown on the Drawings or specified, or as otherwise recommended by the aluminum producer or finisher.
   2. Extruded Shapes and Tubes: ASTM B221.
   3. Plate and Sheet: ASTM B209.
   4. Bars, Rods and Wire: ASTM B211.

D. Stainless Steel Plates and Sheets: ASTM A240, Type 304L or Type 316 stainless steel.
   1. Submerged or intermittently submerged: Type 316 stainless steel.
   2. Non-submerged: Type 304L stainless steel.

E. Stainless Steel Washers: ASTM A320.

F. Stainless Steel Bolts and Nuts: ASTM F593 and ASTM F594, Type 316.

G. Zinc Coated Hardware: ASTM A153.

H. Surface Preparation and Shop Priming: Refer to Section 099000, Painting. All steel shall be primed in the shop. Surface preparation and shop priming requirements are included herein, but are specified n Section 099000.

2.2 MISCELLANEOUS METAL ITEMS

A. Bollards: Provide 4-inch diameter, Schedule 40 black steel pipe, 4-feet-0-inches above grade, 3-feet-0-inches below grade. Bollards shall be either fixed or removable per the Drawings. Fill with concrete and mound top. Bollards shall be primed in the shop. Surface preparation and painting shall conform to the requirements of Section 099000, Painting.

B. Miscellaneous Framing and Supports:
   1. Provide miscellaneous metal framing and supports, which are not a part of the structural steel framework and are required to complete the Work.
   2. Fabricate miscellaneous units to the sizes, shapes and profiles shown on the Drawings or, if not shown on the Drawings, of the required dimensions to receive adjacent grating, plates, tanks, doors, or other work to be retained by the framing. Except as otherwise shown on the Drawings, fabricate from structural shapes, plates, and bars, of all welded construction using mitered corners, welded brackets and splice plates and a minimum number of joints for field connection. Cut, drill and tap units to receive hardware and similar items to be anchored to the Work.
   3. Equip units with integrally welded anchors for casting into concrete or building into masonry. Furnish inserts if units must be installed after concrete is placed.
      a. Except as otherwise shown on the Drawings, space anchors, 24-inches on centers, and provide units the equivalent of 1-1/4 by 1/4 by 8-inch strips.
      b. Galvanize exterior miscellaneous frames and supports.
      c. Galvanize miscellaneous frames and supports where indicated.

C. Fasteners and Fittings: Provide Type 316 stainless steel, for all aluminum fabrications, and zinc coated hardware for all galvanized fabrications, unless otherwise shown on the Drawings or specified.

D. Surface Preparation and Shop Priming: All miscellaneous metal fabrications, except aesthetic steel art forms, shall be primed in the shop. Surface preparation and shop priming requirements are included herein, but are specified in Section 09900, Painting.

E. Aluminum Finish: Provide an Architectural Class 1 anodized finish, AA-M32C22-A41, as specified in NAAMM Manual.

PART 3 - EXECUTION

3.1 INSTALLATION

A. Set miscellaneous metal fabrications accurately in location, alignment and elevation, plumb, level, true and free of rack, measured from established lines and levels. Brace temporarily or anchor temporarily in formwork where fabrications are to be built into concrete, masonry or similar construction.

B. Anchor securely as shown on the Drawings or as required for the intended use, using concealed anchors wherever possible.

C. Fit exposed connections accurately together to form tight hairline joints. Weld steel connections, which are not to be left as exposed joints, but cannot be shop welded because of shipping size limitations. Grind steel joints smooth and touch up shop paint coat. Do not weld, cut or abrade the surfaces of exterior units, which have been hot-dip galvanized after fabrication, and are intended for bolted or screwed field connections.

D. Protection of Aluminum from Dissimilar Materials:
   1. Coat all surfaces of aluminum in contact with dissimilar materials, such as concrete, masonry and steel conforming to the requirements of Section 099000, Painting.

+ + END OF SECTION + +

SECTION 055050

MISCELLANEOUS METALS

PART 1 - GENERAL

1.1 SUMMARY

A. Section includes:

1. Requirements for metal fabrications and miscellaneous metalwork as indicated.

2. Metal fabrications and miscellaneous items and their related components which are to be provided under this Section include: brackets and supports for signs; pipe and conduit sleeves; bearing devices and masonry plates; racks for mounting outdoor switchgear and conduit at substation sites; miscellaneous steel clips, angles, and brackets; and anchors, fasteners, and accessories as required to complete the work.

B. Related Sections:

1. Section 033000 – Cast-in-Place Concrete

2. Section 036000 – Grout

3. Section 055240 – Basic Welding Requirements

1.2 REFERENCES

A. American Society for Testing and Materials [ASTM]

1. ASTM A27 /A27M Specification for Steel Castings, Carbon, for General Application
2. ASTM A36 / A36M Structural Steel
3. ASTM A47 / A47M Specification for Ferritic Malleable Castings
4. ASTM A48 Specification for Gray Iron Castings
5. ASTM A53 / A53M Specification for Pipe, Steel, Black and Hot-Dipped, Zinc Coated, Welded and Seamless
6. ASTM A108 Specification for Steel Bar, Carbon and Alloy, Cold-Finished
7. ASTM A123 / A123M Specification for Zinc (Hot-Dip Galvanized) Coatings on Iron and Steel Products
8. ASTM A143 /A143M Practice for Safeguarding Against Embrittlement of Hot-Dip Galvanized Structural Steel Products and Procedure for Detecting Embrittlement
9. ASTM A153 / A153M Specification for Zinc Coating (Hot Dip) on Iron and Steel Hardware

10. ASTM F3125, Standard Specification for High Strength Structural Bolts, Steel and Alloy Steel, Heat Treated, 120 ksi and 150 ksi Minimum Tensile Strength
11. ASTM F1554 Standard Specification for Anchor Bolts, Steel, 36, 55, and 105-ksi Yield Strength
12. ASTM A384 Standard Practice for Safeguarding Against Warpage and Distortion During Hot-Dip Galvanizing of Steel Assemblies
13. ASTM A449 Specification for Hex Cap Screws, Bolts, and Studs, Steel, Heat Treated, 120/105/90 ksi Minimum Tensile Strength, General Use
14. ASTM A500 Specification for Cold-Formed Welded and Seamless Carbon Steel Structural Tubing in Rounds and Shapes
15. ASTM A501 Specification for Hot-Formed Welded and Seamless Carbon Steel Structural Tubing
16. ASTM A536 Specification for Ductile Iron Castings
17. ASTM A563 Specification for Carbon and Alloy Steel Nuts
18. ASTM A668 / A668M Specification for Steel Forgings, Carbon and Alloy, for General Industrial Use
19. ASTM A780 Practice for Repair of Damaged and Uncoated Areas of Hot-Dip Galvanized Coatings
20. ASTM F436 Specification for Hardened Steel Washers

B. National Association of Architectural Metal Manufacturers (NAAMM)

1. NAAMM Metal Bar Grating Manual.

1.3 SUBMITTALS

A. All submittals shall be sent to the ENGINEER for review and approval.

B. Submit fully detailed shop drawings of metal fabrications and miscellaneous metalwork, showing sizes, details of fabrication and construction, methods of assembly, locations of hardware, anchors, and accessories, and installation details.

C. Submit manufacturers' product data of all manufactured items and products.

1.4 QUALITY REQUIREMENTS

A. Take responsibility for quality control as outlined in the contract drawings except as modified herein.

B. Provide Materials conforming to the designated ASTM requirements.

C. Fabricate Materials in accordance with the requirements of Code of Standard Practice referenced herein and as specified.

PART 2 - PRODUCTS

2.1 MATERIALS

A. General: Manufactured steel clips and angles will be accepted where such will meet the requirements of the Contract Documents and are specified on approved shop drawings.

B. Steel Materials:

1. Shapes: Standard structural sections, shapes, plates, and bars, as indicated, conforming with ASTM A36, ASTM A572 ASTM A992 as specified on the drawings. Bars conforming with ASTM A108 will be accepted.
2. Tubing: Steel tubing, conforming with ASTM A500, of size and shape specified.
3. Pipe: Steel pipe or round tubing, conforming to ASTM A53, Type E or S, Grade A, of diameters and sizes specified. Pipe for sleeves and exterior locations shall be galvanized pipe as specified in ASTM A53.

C. Welding Rods/Electrodes: Refer to Section 055240, Basic Welding Requirements, for requirements.

D. Castings: ASTM A27, A47, A48, or A536, as applicable to the work.

E. Forgings: ASTM A668, of Class specified or required.

F. Anchors and Bolts: ASTM F3125 A325 and ASTM F1554 as applicable. Bolts and studs, nuts, and washers shall be hot-dip galvanized in accordance with ASTM A153.

G. Fasteners and Accessories: Furnish anchors and fasteners, washers, straps, and accessories as required for a complete and finished installation. Fasteners shall be stainless steel or galvanized steel as appropriate and approved for the location. Machine screws shall be used wherever possible.

H. Concrete Anchors: Where anchors are not cast into the concrete provide galvanized expansion type anchors with matching galvanized steel bolts or studs with nuts, of sizes as specified or required. Provide washers under all bolt heads and nuts.

I. Gratings:

1. Bar-Type Gratings:

a. Provide flat-bar type steel gratings of all-welded construction, consisting of bearing bars and secondary bars in rectangular configuration, with flat/plane level traffic surface, hot-dip galvanized after fabrication. Provide gratings with matching hot-dip galvanized steel frames for anchoring in concrete.

Comply with applicable requirements of the NAAMM Metal Bar Grating Manual.

b. Notch or frame openings in gratings for penetrations as specified. Lay out units to allow grating removal without disturbing items penetrating the grating. Provide banding for openings in grating separated by more than four bearing bars, of same material and size as bearing bars.

c. Cut, drill, and fit gratings as required for installation. Notching of bearing bars as supports to maintain elevations will not be permitted.

2.2 FABRICATION

A. Metalwork shall be fabricated by firms or shops experienced and skilled in the custom fabrication and construction of metal fabrications and miscellaneous metalwork. There shall be no exposed screws, bolts, and fasteners in the finished work, except as indicated or required.

B. Welded connections shall be made in accordance with requirements of the drawings and specifications. Welds where exposed to view shall be ground down and dressed smooth, so that the shape and profile of the item welded is maintained.

C. Metal fabrications shall be prefabricated and preassembled in the factory or shop as far as practicable.

D. Form and fabricate the work to meet installation conditions. Include anchors, fasteners, and accessories to secure the work in place, as indicated.

E. The Contractor may furnish standard manufactured products for components when applicable, providing such products meet space limitations and installation conditions and are approved by the ENGINEER.

2.3 GALVANIZING

A. Steel and ferrous metal items for outdoor installation, items exposed to moisture, gratings, and items so specified on the Contract Documents, shall be galvanized after fabrication by the hot-dip process in accordance with ASTM A123. Weight of the zinc coating shall conform with the requirements specified under "Weight of Coating" in ASTM A123.

B. Safeguarding against steel embrittlement shall conform with the applicable requirements of ASTM A143.

C. Safeguarding against warpage and distortion of steel members shall conform with the applicable requirements of ASTM A384.

D. Shop galvanized metalwork necessitating field welding which in any manner removes original galvanizing shall be restored by field galvanizing repair in accordance with ASTM A780.

E. Bolts and screws for attachment of galvanized items shall be galvanized in accordance with ASTM A153.

PART 3 - EXECUTION

3.1 INSTALLATION

A. Install metal fabrications and miscellaneous metalwork in accordance with the Contract Documents and the approved shop drawings, using workers skilled and experienced in the installation of the type of work involved.
B. Install metal fabrications and miscellaneous metalwork with all accessories furnished by the fabricator as required for complete and finished installations.
C. Installation of metalwork shall be in accordance with approved shop drawings, true and horizontal, perpendicular, or at the required angle, as the case may be, level and square, with angles and edges parallel with related lines of the building or structure.
D. Field welding, where required, shall conform to requirements of Section 055240 – Basic Welding Requirements.

+ + END OF SECTION + +

SECTION 055240

BASIC WELDING REQUIREMENTS

PART 1 - GENERAL

1.1 SUMMARY

A. Section Includes:

1. Basic welding requirements for structural and non-structural metal, piping, and miscellaneous metal fabrications; including weld performance and procedure qualification, base and filler metal requirements, preparation of joints, technique, inspection, examination, and related special processes.

2. Welded products identified by the Engineer of Record or its designee as "off-the-shelf" are exempt from the requirements of this Section.

3. Weldments, or specific welds on weldments, identified by the Engineer of Record or its designee to be solely architectural and/or ornamental and whose failure will not cause system loss or jeopardize public safety, are exempt from the requirements of this Section.

B. Related Sections:

1. Section 051200- Structural Steel
2. Section 055000 – Metal Fabrications
3. Section 053000 - Metal Deck
4. Section 055010 - Miscellaneous Metals

1.2 REFERENCES

A. American Society for Nondestructive Testing [ASNT]

1. ASNT Central Certification Program (ACCP)
2. ANSI/ASNT CP-189 Standard for Qualification and Certification of Nondestructive Testing Personnel
3. ASNT Recommended Practice SNT-TC-1A

B. American Welding Society [AWS]

1. AWS B2.1 Specification for Welding Procedure and Performance Qualification
2. AWS D1.1 Structural Welding Code – Steel
3. AWS QC1 Standard for AWS Certification of Welding Inspectors

1.3 DEFINITIONS

A. CS is an abbreviation used to denote carbon steel.
B. CWI is an abbreviation used to denote a Certified Welding Inspector.
C. "Off-the-shelf" for the purposes of this Specification is defined as a commercial item produced and placed in stock by a Contractor, or stocked by a distributor, before receiving orders or contracts for its sale.
D. "Commercial" for the purposes of this Specification is defined as an item described in commercial catalogs, drawings, or industrial standards.
E. SS is an abbreviation used to denote stainless steel.

1.4 SUBMITTALS

A. Submit the following information in accordance with the requirements of the contract drawings except as modified herein.

1. Testing Agency agreement per Subparagraph 1.5C.1.c. 30 days before the start of work activity.
2. Welding procedures per Subparagraph 1.5B.2.a.
3. Performance Qualification Records per Subparagraph 1.5B.3.a. Submit minimum of 60 days prior to start of work activity and receive approval from the ENGINEER a minimum of 30 days before the start of work activity. All certifications will be stamped by a certified weld inspector prior to submission. Provide written verification that welders have not had a break service (employment) greater than six (6) months since certification.

1.5 QUALITY REQUIREMENTS

A. Comply with the quality requirements of the contract drawings.

B. Procedure and Welder Qualification:

1. Unless otherwise required by the specific Specification Section, qualify all welding procedures and welders in accordance with the following standards:

a. Structural Steel (1/8 inch minimum): AWS D1.1.
b. Structural Stainless Steel: AWS B2.1 or ASME BPVC-IX.

2. Welding Procedures:

a. Submit all welding procedures to be used on the Contract, and address and document all applicable variables as noted in the suggested weld procedure

forms of the applicable codes for both pre-qualified and qualified procedure.

b. When pre-qualified procedures are permitted, prepare separate pre-qualified procedures within the limitation of the variables noted for fully qualified procedure.

c. Include the revision number and authorized signature on each procedure.

d. Indicate on the procedure or by submittal attachment, the specific application of all procedures submitted for review.

e. All welding procedures are to be stamped by a Certified Welding Inspector who's stamp shall be identified on all procedures.

3. Performance Qualification Records:

a. Submit Performance Qualification Records (P.Q.Rs) to qualify the procedures and welders, and include the applicable code, process, position(s) tested, material thickness, tests conducted, test results, an authorized signature, and other documentation in accordance with the applicable code. Submit minimum of 60 days prior to start of work activity and receive approval from the ENGINEER a minimum of 30 days before the start of work activity.

C. Testing Agency:

1. Employ a reputable, certified, and independent Testing Agency experienced in performing all of the tests required by this Section to perform weld qualification testing and production weld testing, and to certify whether or not each weld meets specified quality criteria for the duration of this Contract.

a. All testing performed by the Testing Agency will be at the Contractor's expense and at no additional cost to the AGENCY.

b. Specify the following in the Contractor's agreement with the Testing Agency:

1) The Testing Agency is directly responsible to the ENGINEER or engineer's representative and not the Contractor.

a) The ENGINEER or engineer's representative, at his/her discretion, may observe all inspection and testing.

2) All subsequent communication between the Testing Agency and the Contractor will be copied to the ENGINEER.

c. At least 60 Days before welding operations are initiated, submit a copy of the agreement with the Testing Agency for approval.

2. The Independent Testing Agency and their testing program, personnel, and procedures must be certified.

a. Test technicians performing non-destructive examination (NDE) of welds must hold an ASNT Level II or Level III certification in accordance with ASNT Recommended Practice SNT-TC-1A, the ASNT Central Certification Program, and ANSI/ASNT CP-189, or be a Certified Welding Inspector (CWI) in accordance with AWS QC1; and must have at least one year of testing experience.

1.6 DELIVERY, STORAGE, AND HANDLING

A. Store, maintain, and use equipment and Materials in a manner consistent with their manufacturer's recommendations and good work practice.

1. Secure gas bottles used for cutting and welding to prevent their damage or unintended movement.
2. Replace caps on gas valves when not in use.

PART 2 - PRODUCTS

2.1 MATERIALS

A. Filler Metal:

1. Filler compatibility: Select filler metal so principal elements in deposited weld metal are of same nominal composition as base Material being joined.

2.2 EQUIPMENT

A. Use a constant voltage power supply for all semiautomatic wire feed processes.

B. Equipment used for working with stainless steels:

1. Mark equipment used for working with stainless steels, including wire brushes and grinding wheels.
2. Maintain and store this marked equipment separate from other welding equipment; and use it only for stainless steel.

PART 3 - EXECUTION

3.1 PREPARATION

A. Weld Joint Preparation:

1. Prepare weld joints by machining, grinding, or thermal cutting.

a. If thermal cutting is used to prepare a joint, mechanically prepare and clean joint surfaces to sound metal before welding.

b. If thermal cutting is used to prepare tee and corner joints, grind the joints smooth to facilitate alignment and proper fit.

2. Cleaning Joint Surfaces:

a. Clean joint surfaces free of slag, rust, scale, grease, paint, and foreign material detrimental to the integrity of weld.
b. For stainless steel, use grinding wheels and stainless steel wire brushes that have not been previously used on carbon steel.

3.2 ACCEPTABLE WELDING PROCESSES

A. Provide workmanship and welding techniques in accordance with the codes, standards referenced by the specific product Specification Section, and the following:

1. Shielded metal arc welding (SMAW).
   a. Weld all dynamically loaded structures using the SMAW process and E7018 electrodes.
2. Gas tungsten arc welding (GTAW)
3. Gas metal arc welding (GMAW)
   a. GMAW in short circuiting mode is not authorized for material greater than 3/8 inch thick.
4. Flux cored arc welding (FCAW).
   a. Document FCAW Self-shielded Electrode on weld procedures electrical documentation.
5. Submerged Arc Welding (SAW).

3.3 WELDING

A. Perform and maintain end preparation, root openings, and alignment tolerances as described in the weld procedure and applicable code.
B. Perform tack welds used for holding alignment and position to the same requirements as the root pass.
C. Incorporate tacks into the weld only after it has been slagged, wire brushed, and verified as crack free.
D. Preheat and Interpass Temperatures:
   1. Verify that preheat and interpass temperatures are maintained, as required by applicable codes, standards, and procedures, with temperature crayons or other calibrated temperature measuring instruments suitable to the material welded.
   2. Maintain required preheat and interpass temperature at least three inches in all directions from all surfaces being welded.
E. Do not perform grinding on carbon steel in the area of stainless steel fabrication.

3.4 WELD IDENTIFICATION

A. Welder identification:

1. Assign a unique identification mark to each qualified welder performing welding activities for use in tracking that welder's production.
2. Indicate each welder's identification mark on the welder's written performance qualification record.
3. Once assigned, do not assign the unique identification mark to another welder.
4. Maintain a log to allow matching of an identification marked weld to a specific welder's name.

B. Weld identification:

1. Develop a written weld identification system that allows inspection activities to track each weld.

    a. To allow matching inspection activity to a weld location, use a written system that allows welds to be uniquely identified and traceable between inspection documents and drawings.

C. Maintain inspection tracking documentation and referenced inspection reports as permanent Contract records for the Contract duration.

1. Submit non-destructive examination (NDE) rework records to the ENGINEER to be maintained as a Contract record on a weekly basis.

D. Identify structural steel and pressure retaining welds:

1. Apply marks on welds for identification of the welds by dye stamp or paint marker.

    a. Dye stamps used on dynamically loaded members are limited to blunt-nosed continuous or blunt-nosed interrupted dot types.

2. Marking groups of welds instead of each weld is permitted only with acceptance by the ENGINEER.

3.5 REPAIR/RESTORATION

A. Weld Repair:

1. Make repairs to correct weld defects using a welding procedure and welders in accordance with the same requirements utilized on the original weld.
2. Reexamine repair areas using the same inspection procedures by which the defect was originally detected.
3. Only two repair attempts will be allowed on a defective area.
    a. Do not attempt further repairs without the authorization of the ENGINEER.

3.6 FIELD QUALITY CONTROL

A. Do not consider welds acceptable until required examination/test results are complete, acceptable, and documented.

B. Welds deposited by processes different from authorized processes as listed in Article 3.2 may be subject to complete removal.

+ + END OF SECTION + +

SECTION 09 90 00 - PAINTING AND COATING

PART 1 GENERAL

1.1 SUMMARY

A. Work under this Section includes the protective coating of specified surfaces including all surface preparation, pretreatment, coating application, touch-up of factory coated surfaces, protection of surfaces not to be coated, cleanup, and appurtenant work, all in accordance with the requirements of the Contract Documents and as listed below:

1. Interior and exterior piping, regardless of type of factory-applied finish, where color-coding required.

2. Exposed interior and exterior structural and non-structural steel surfaces.

3. Exterior and interior equipment, motors, and appurtenances.

4. Interior and exterior concrete as noted within this Section.

5. Labeling and directional arrows on piping, equipment with valves or electrical connections, valves, and ducts whether coated or not.

B. Related Requirements:

1. The Coating System Schedules summarize the surfaces to be coated, the required surface preparation, and the coating systems to be applied. Coating notes in the Drawings are used to show exceptions to the schedules, to show or extend the limits of coating systems, or to clarify or show details for application of the coating systems.

2. Shop coatings and/or factory finishes on fabricated or manufactured equipment may be specified in other divisions. Some items with factory finishes, or corrosion resistant finishes may be scheduled or directed to be painted by the Engineer to unify a wall finish or color scheme, at the Engineer's discretion.

3. Coatings for liquid storage tanks shall be in accordance with Arizona Water Company Tank Coating Specifications O-12-2.

4. In the event of conflict between these specifications and the Arizona Water Company Tank Coating Specifications O-12-2, the Arizona Water Company Specifications shall prevail, unless directed otherwise by Change Order.

5. Exclusions - Do not coat the following surfaces unless specified or directed elsewhere: Stainless steel, aluminum, copper, brass, bronze, and other corrosion-resistant material (except for valve bodies and piping); Electrical switchgear and motor control centers having factory finish; Fencing; Multiple coated factory finished baked enamel or porcelain products; Concealed areas such as ducts, piping, conduits, and items specified elsewhere for special linings and coatings.

6. Damaged Factory Finish - If directed by the Engineer, refinish the entire exposed surfaces of equipment chipped, scratched, or otherwise damaged in shipment or installation.

7. Provide NSF approved coating for equipment in contact with potable water.

Note to Specifier

Edit to fit project.

1.2 DEFINITIONS

A. Coatings: Heavy duty finishes for use on any surfaces, especially surfaces subject to submerged, high moisture, splash or chemical environment.

B. Ambient Conditions:

1. Interior: Surface subject to normal temperatures and humidity such as found in offices and corridors.

2. Exterior: Surface subject to weathering, sunlight or wet areas such as open tanks.

3. Submerged: Surface submerged in a liquid as specified. Coat all surfaces in regular contact with the liquid plus the entire interior area above the liquid surface level.

4. Chemical Splash: Surface subject to corrosive chemical splash or fumes, as specified.

5. Buried Below Grade: Footings, buried pipe or other materials buried below ground and in direct contact with the surrounding soil.

C. Surface Preparation: Any cleaning, sand-blasting or other preparation to be performed on the surface prior to the first coating application.

D. Primer Coat: Field prime, factory prime, or shop prime.

E. Intermediate Coat: Any successive coats applied over primer coat before the finish coat.

F. Finish Coat: Final coat applied to surface. When only one coat is required, it is listed as finish coat.

1.3 REFERENCE STANDARDS

A. American Water Works Association (AWWA)

1. AWWA C105 - Polyethylene Encasement for Ductile Iron Piping Systems.

2. AWWA C203 - Coal-Tar Protective Coatings and Linings for Steel Water Pipes

3. AWWA C205 - Cement-Mortar Protective Lining and Coating for Steel Water Pipe - 4-inch and Larger - Shop Applied

4. AWWA C209 – Cold-Applied Tape Coatings for Steel Water Pipe, Special Sections, Connections, and Fittings.

5. AWWA C210 – Liquid-Epoxy Coatings and Linings for Steel Pipe and Fittings.

6. AWWA C213 – Fusion-Bonded Epoxy Coatings and Linings for Steel Water Pipe and Fittings.

B. Environmental Protection Agency (EPA)

C. Association for Materials Protection and Performance (Formally NACE International and SSPC)

1. SP0188 – Discontinuity (Holiday) Testing of New Protective Coatings on Conductive Substrates.

2. PA 2 – Procedure for Determining Conformance to Dry Coating Thickness Requirements

3. PA 10 – Guide to Safety and Health Requirements for Industrial Painting Projects.

4. SP1 – Solvent Cleaning

5. SP2 – Hand tool Cleaning

6. SP3 – Power Tool Cleaning

7. SP5 – White Metal Blast Cleaning

8. SP6 – Commercial Blast Cleaning

9. SP7 – Brush-off Blast Cleaning.

10. SP10 – Near-white Blast Cleaning

11. SP11 – Power Tool Cleaning to Bare Metal

12. SP12 – High- and Ultra High-Pressure Water Jetting

13. SP-13 – Surface Preparation of Concrete

14. SP14 – Industrial Blast Cleaning

15. SP 16 – Brush-Off Blast Cleaning of Coated and Uncoated Galvanized Steel, Stainless Steels, and Non-Ferrous Metals.

16. Guide 15 – Field Methods for Retrieval and Analysis of Soluble Salts on Steel and Other Nonporous Substrates

D. National Sanitation Foundation (NSF)

1. NSF International (NSF) Standard No. 61 – Drinking Water System Components – Health Effects.

2. NSF International (NSF) Standard No. 600 – Health Effects Evaluation and Criteria for Chemicals in Drinking Water.

E. Occupational Safety and Health Administration (OSHA).

1.4 SUBMITTALS

A. As specified in Section 01 33 00, Submittal Procedures.

B. Coating Materials List:

1. Provide a coating materials list which indicates the Manufacturer and the coating number, keyed to the coating systems herein.

C. Coating Manufacturer's and Applicator Information -- For each coating system to be used, submit the following listed data.

1. Manufacturer's data sheet for each product used, including statements on the suitability of the material for the intended use.

2. Manufacturer's instructions and recommendations on surface preparation and application.

3. Substitutions: For coatings not specified, provide substitute manufacturer's literature with specified coating literature for ENGINEER to make proper evaluation.

4. Colors available for each product and each coat.

5. Compatibility of shop and field applied coatings (where applicable).

6. Material safety data sheet for each product used.

7. The Manufacturer’s recommended products and procedures for field coating repairs and field preparation of field cut pipe ends.

8. The name of the proposed coating applicator shop along with certification that the applicator shop is qualified and equipped to apply the coatings systems as specified.

9. Certificate

   a. Submit Manufacturer's certificate of compliance with the specifications and standards signed by a Manufacturer’s representative.

10. Samples

    a. Actual color samples available for each type of coating scheduled.

    b. Two 4 -inch by 4- inch steel panels for each method of metal preparation specified. Panel shall be representative of steel used and prevent deterioration of surface quality. Upon acceptance by ENGINEER and COMPANY, panel shall be preserved as reference source for inspection.

D. Miscellaneous:

1. Letter of Certification/Shop Painting:

   a. CONTRACTOR has option of shop coating materials and equipment partially or totally.

   b. If CONTRACTOR applies coatings in factory submit following:

      1) Coatings used.

      2) Manufacturer's written certificate factory-applied coating system is identical to, or exceeds, specified requirements.

3) Requirements for touch-up or coating.

4) History of coating performance in same environment.

c. Submit following for factory-applied first coat.

1) First coat used.

d. CONTRACTOR'S certification factory-applied first coat is compatible with field-applied finish coats.

2. Certification:

a. Certification by the manufacturer that products supplied, comply with local regulations controlling use of volatile organic compounds (VOCs).

3. Schedules:

a. Submit schedule of proposed coating systems.

b. Schedule of proposed coating systems shall identify same information as shown in coating schedule.

1.5 QUALITY ASSURANCE

A. Applicator Qualifications:

1. The Applicator Contractor must be capable of performing the various items of work as specified. Furnish a statement covering experience on similar work, a list of machinery, plant, and other equipment available for the proposed work, and a financial statement, including a complete statement of the Applicator Contractor's financial ability and experience in performing similar painting and coating work.

2. Requirements for the Applicator Contractor include a minimum of 5 years practical experience and a successful history in the application of the specified products to concrete/steel surfaces. Provide a list of project references to Engineer for review.

B. Provide the Engineer a minimum of 3 days advance notice of the start of any field surface preparation work of coating application work, and a minimum of 7 days advance notice of the start of any shop surface preparation work.

C. Perform Work only in the presence of the Engineer unless the Engineer has granted prior approval to perform such work in its absence.

D. Inspection by the Engineer, or the waiver of inspection of any portion of the work, does not relieve the Contractor of its responsibility to perform the work in accordance with these Specifications.

E. Surface Preparation - Evaluation of blast cleaned surface preparation work will be based upon comparison of the blasted surfaces with the standard samples available from AAMP.

F. Erect and move scaffolding to locations where requested by the Engineer to facilitate inspection.

1. Provide additional illumination to cover all areas to be inspected.

G. Paint Products – Approval for request for substitution for products decreasing the film thickness designated or the number of coats to be applied, or which offers a change from the generic type of coating specified will not be granted.

1. Coordinate with Engineer and COMPANYto schedule painting to maintain dust-free and neat work. Paint in strict accordance with the Manufacturer's instructions and perform Work satisfactory to the Engineer.

H. Manufacturer's Representative - Require Coating Manufacturer's representative to be at job site when the first day's coating application is in progress and periodically during progress of the work. Representative must also submit written acceptance of coated materials or equipment when deemed completed and acceptable by manufacturer.

I. Labels - Deliver to the job site in the original sealed containers with Manufacturer's name, product name, type of product, Manufacturer's specification or catalog number or federal specification number, and instructions for reducing where applicable.

J. Colors - Colors will be selected from Manufacturer's standard colors as reviewed by Engineer and approved by COMPANY. Colors for special coatings that are limited in their availability and color selection will be chosen on the basis of Manufacturer's standard colors, provided that the Manufacturer's product line represents a color range comparable to similar products of other manufacturers.

K. Flame Spread - Provide paint materials which will result in a Class II finish for all coated surfaces in exit corridors, and a Class III finish for all other interior rooms or areas.

L. Film Thickness Testing:

1. On ferrous metals, measure the dry film coating thickness in accordance with the SSPC "Paint Application Specification No. 2" using a magnetic-type dry film thickness gauge.

a. Manufacturers

1) Mikrotest model FM.

2) Elcometer model 456.

3) Or equal.

2. Test each coat for the correct thickness. Measurements are allowed at least 8 hours after application of the coating.

3. On non-ferrous metals and other substrates, measure the coating thickness at the time of application using wet film gauge readings and destructive film thickness tests.

M. Inspection Device.

1. Furnish, until final acceptance of such coatings, inspection devices in good working condition for the detection of holidays and measurement of dry-film thicknesses of protective coatings.

    a. Provide dry-film thickness gauges for Engineer’s use while coating is being done, until final acceptance of such coatings.

    b. Provide the services of a trained operator of the holiday detection devices until the final acceptance of such coatings.

N. Holiday Testing.

1. Holiday test all coated ferrous surfaces. Mark and repair or recoat areas containing holidays in accordance with the Coating Manufacturer's printed instructions and then retested.

    a. Coatings With Thickness Exceeding 20 Mils DFT:

        1) For surfaces having a total dry film coating thickness exceeding 20 mils, provide a pulse-type holiday detector.

            a) Tinker & Rasor Model AP-W, D.E. Stearns Co, Model 14/20.

            b) Or equal.

        2) Adjust the unit to operate at the voltage required to cause a spark jump across an air gap equal to twice the specified coating thickness.

    b. Coatings With Thickness of 20 Mils DFT or Less:

        1) For surfaces having a total dry film coating thickness of 20 mils or less:

            a) Tinker & Rasor Model M1 nondestructive type holiday detector.

            b) Or equal.

        2) Operate the unit at less than 75 volts.

            a) For thicknesses between 10 and 20 mils, add a non-sudsing type wetting agent to the water prior to wetting the detector sponge.

                (1) Kodak Photo-Flo.

                (2) Or equal.

2. Test in accordance with AWWA SP0188.

1.6 DELIVERY, HANDLING, AND STORAGE

A. Deliver material in original, sealed, unopened packages and containers bearing manufacturer's name. Each container shall have manufacturer's printed label stating type of coating, color of coating, instructions for reducing, and spreading rate.

B. Protect and heat or cool material storage location to maintain temperature ranges recommended by coating manufacturer for most sensitive coating, but not less than 55 degrees F.

C. Keep storage area neat and clean and replace or repair damage thereto or to its surroundings.

D. Avoid danger of fire. Deposit cleaning rags and waste materials in metal containers having tight covers or remove from building each night. Provide fire extinguishers of type recommended by coating manufacturer in areas of storage and where finishing is occurring. Allow no smoking or open containers of solvents. Store solvents in safety cans.

E. Empty containers shall have labels canceled and be clearly marked as to use.

1.7 Upon Substantial Completion, remaining material will become property of COMPANY. Seal material as required for storage, marked as to contents and shelf life, and store where required by ENGINEER. Provide COMPANY with a minimum of 1 gallon of each color and sheen used on the project.

1.8 PROTECTION

A. Environmental Requirements:

1. Do not apply exterior coating in cold, foggy, damp or rainy weather.

2. Do not apply finish in rooms where dust is being generated.

3. Do not apply exterior coating when temperature is lower than 50 degree F or as required by manufacturer.

4. Maintain interior temperature and relative humidity of space, as recommended by coating manufacturer, 24 hrs before applying and until coating is cured.

B. Cover materials and surfaces, including floors, adjoining or below Work with clean drop cloths or canvas.

C. Remove hardware, accessories, plates, lighting fixtures, and similar items or provide protection by masking. Upon completion, replace above items or remove protection and clean.

D. Maintain manufacturer's environmental requirements while coating dries.

E. Follow all safety recommendations of Manufacturer regarding ventilation and danger from explosion or breathing paint fumes or skin exposure, and applicable OSHA and federal and local regulations.

F. Protect surface adjacent to work being coated from overspray, drips, or other damage.

1.9 PIPING COLOR CODE

A. To facilitate identification of piping, the following color scheme will be utilized:

1. Water Lines

Raw	Olive Green

Settled or Clarified	Aqua
Finished or Potable	Dark Blue
Potable Water	Blue
Sprinklers	Dark Red
Suction Line at Pump Stations	Mid Blue
Discharge Line at Pump Stations	Safety Blue

2. Chemical Lines

Alum or Primary Coagulant	Orange
Ammonia	White
Carbon Slurry	Black
Caustic	Yellow with Green Band
Chlorine (Gas and Solution)	Yellow
Fluoride	Light Blue with Red Band
Lime Slurry	Light Green
Ozone	Yellow with Orange Band
Phosphate Compounds	Light Green Band
Polymers or Coagulant Aids	Orange with Green Band
Potassium Permanganate	Violet
Soda Ash	Light Green with Orange Band
Sulfuric Acid	Yellow with Red Band
Sulfur Dioxide	Light Green with Yellow Band

3. Waste/Sludge Lines

Backwash Waste	Light Brown
Raw Sludge	Dark Brown
Sludge Recirculation-Suction	Dark Brown with Yellow Band
Sludge Recirculation-Discharge	Dark Brown
Sludge Draw-Off	Dark Brown
Sewer (Sanitary or Other)	Dark Gray
Treated Effluent/Non-Potable	Purple with “Non-Potable- Do Not Drink” Labeling

4. Other

Compressed Air	Dark Green
Digester Gas	Orange or Red
Natural Gas	Orange or Red with Black Bands
Hoist Trolleys	Yellow
Fire Protection	Red
Steam	Orange
Oil	Ivory

5. In situations where two colors do not have sufficient contrast to easily differentiate between them, a six-inch band of contrasting color should be on one of the pipes at approximately 30-inch intervals.

6. The name of the liquid or gas, along with directional arrows indicating the direction of flow should also be on the pipe.

7. When color not specified, coordinate with COMPANY for color selection.

PART 2 PRODUCTS

2.1 GENERAL

A. The terms "paint," "coatings," or "finishes" as used herein, includes surface treatments, emulsions, enamels, paints, epoxy resins, tape, and all other protective coatings, excepting galvanizing or anodizing, whether used as a pretreatment, primer, intermediate coat, or finish coat. The term "DFT" means minimum dry film thickness.

B. Seal coating materials in containers that plainly show the designated name, formula or specification number, batch number, color, date of manufacture, Manufacturer's directions, and name of Manufacturer, legibly at the time of use.

C. Use coating materials suitable for the intended use and recommended by their Manufacturer for the intended service.

D. Compatibility - In any coating system, provide only compatible materials from a single manufacturer. Provide particular attention to compatibility of primers and finish coats. If necessary, subject to the approval of the Engineer, apply a barrier coat between existing prime coat and subsequent field coats to ensure compatibility.

2.2 INDUSTRIAL COATING SYSTEMS

A. General

1. Provide and apply the industrial coatings systems which follow as listed in the coating schedule, as required by these specifications, and as directed by the Engineer. Coat existing surfaces, new surfaces, submerged surfaces, and intermittently submerged surfaces as indicated in the Drawings and Schedule. Use Coating System Numbers listed below as the Coating System code letter and include reference of Coating System Number on any coating submittals or correspondence.

2.3 MANUFACTURERS

A. Coatings:

1. Tnemec (or as specially called out in the coating schedule).

2. AMERON Protective Coatings Division.

3. Or approved equal.

2.4 MATERIALS

A. Coatings:

1. Color shall be formed of pigments free of lead, lead compounds or other materials which might be affected by presence of hydrogen sulfide or other gases likely to be present at Project.

2. Coatings shall meet surface burning characteristics as required by code and established by ASTM E84.

2.5 COLORS

A. Colors shall be selected and approved by COMPANY.

B. The piping color schedule shall be in accordance with COMPANY Standard Specification Drawing No. E-9-16-1, or may be found at the end of this specification if not specified on COMPANY Standard Specification Drawing No. E-9-16-1, or approved by COMPANY.

2.6 EQUIPMENT COLORS:

A. Equipment includes equipment, motors, and structural supports, fasteners, and attached portions of electrical conduit.

B. Equipment and piping color shall be selected by COMPANY.

2.7 FLOOR COLOR:

A. Floor color shall be white.

2.8 MIXING AND TINTING

A. Each coat shall be slightly darker than preceding coat, unless otherwise approved.

B. Tint undercoats similar to finish coats.

C. PART 3 EXECUTION

PART 3 EXECUTION

3.1 STORAGE, MIXING, AND THINNING OF MATERIALS

A. Manufacturer's Recommendations

1. Unless otherwise specified herein, the Coating Manufacturer's printed recommendations and instructions for thinning, mixing, handling, applying, and protecting its coating materials, for preparation of surfaces for coating, and for all other procedures relative to coating be strictly observed.

B. Use protective coating materials within the Manufacturer's recommended shelf life.

C. Storage and Mixing

1. Protect coating materials from exposure to cold weather, and be thoroughly stirred, strained, and kept at a uniform consistency during application. Do not mix coatings of different manufacturers together.

3.2 EXAMINATION

A. If surfaces to be finished cannot be put into proper condition for finishing by customary cleaning, sanding, and puttying operations or if surfaces were improperly primed by others, report defects to ENGINEER, in writing, or assume responsibility and correct unsatisfactory finish resulting from improper surfaces. Commencement of Work indicates acceptance of surfaces.

B. Materials removed and replaced to correct defects due to Work placed on unsuitable surfaces shall be at CONTRACTOR'S expense.

C. Where surface dryness is questioned, test with dampness indicating instrument. Do not apply coatings over surfaces where moisture content exceeds that permitted in manufacturer's printed instructions.

D. Provide coats compatible with the surface and prior coats.

E. Do not coat the following unless specifically noted otherwise:

1. Factory-finished electrical motor control panels (MCC) and main instrument panels (MIP), flow indicators, and related equipment.

    a. Underground equipment and piping.

2. Surfaces above suspended ceiling systems (unless color coded).

3. Existing surfaces.

4. Factory-finished trim.

5. Stainless steel.

6. Aluminum

7. Galvanized surfaces.

F. Do not coat over any code-required labels such as UL and Factory Mutual, or any equipment identification, performance rating, name, or nomenclature plates.

3.3 SURFACE PREPARATION AND TOUCH-UP

A. General:

1. Surfaces, including floors shall be clean, dry, and free of loose dirt, dust, and foreign matter before applying coating.

2. Comply with coating manufacturer's recommendations for surface preparation.

B. Ungalvanized Ferrous Metal:

1. General:

a. Round or chamfer sharp edges and grind smooth burrs, jagged edges, and surface defects.

b. Prepare welds and adjacent areas to remove undercutting or reverse ridges on weld bead, weld spatter on or adjacent to weld or area to be coated, and sharp peaks or ridges along weld bead. Grind embedded pieces of electrode or wire flush with adjacent surface of weld bead.

c. Coat surfaces same day prepared. Re-prepare surfaces starting to rust before coating.

2. Cleaning Methods:

a. Workmanship for metal surface preparation as specified shall conform with SSPC specifications as follows:

1) SP-1: Solvent Cleaning

2) SP-2: Hand Tool Cleaning

3) SP-3: Power Tool Cleaning

4) SP-5: White Metal Blast Cleaning

5) SP-6: Commercial Blast Cleaning

6) SP-7: Brush-off Blast Cleaning

7) SP-8: Pickling

8) SP-10: Near-White Blast Cleaning

b. Wherever "solvent cleaning," "hand tool cleaning," "wire brushing," "blast cleaning," or similar words of equal intent used in Specifications or coating manufacturer's specifications, they shall be understood to refer to applicable SSPC specifications listed above.

c. Use hand tools to clean areas that cannot be cleaned by power tools.

3. Shop Preparation: Equipment, structural steel, metal doors and frames, metal louvers, and similar items may be shop-prepared and first coat applied at CONTRACTOR'S option. Centrifugal wheel blast cleaning is acceptable alternate to shop blast cleaning. Clean and prime in accordance with this section.

4. Field Touch-Up: Sandblast items and equipment as specified to restore damaged surfaces previously shop or field blasted and first coat applied. Materials, equipment, procedures, and safety equipment for personnel shall conform to SSPC.

C. Galvanized Metal:

1. Touch-up damaged areas with zinc-rich primer.

2. Wash galvanized metal surfaces with mineral spirits or comparable manufactured products.

D. Masonry:

1. Remove loose grit and mortar.

2. Remove grease, oil, dirt, salts or other chemicals, loose materials or other foreign matter by solvent, detergent or other suitable cleaning methods.

E. Concrete:

1. Do not begin surface preparation until 30 days after concrete has been placed.

2. Remove grease, oil, dirt, salts or other chemicals, loose materials or other foreign matter by solvent, detergent or other suitable cleaning methods.

3. Brush-off blast to remove laitance, form release agents, and solid contaminants. Perform sufficiently close to surface to open up surface voids, bug holes, air pockets, and other subsurface irregularities, but so as not to expose underlying aggregate. Resulting surface should be clean and uniform as required by coating manufacturer. If brush-off blasting is impractical, acid etch with muriatic acid solution and wash with water or neutralizing agent as required by coating manufacturer.

F. Plastic:

1. Solvent clean pipe in accordance with manufacturer's recommendations.

2. Hand sand with medium grit sandpaper to provide tooth for coating system.

3. Large areas may be power sanded or brush-off blasted, provided sufficient controls employed so surface roughened without removing excessive material.

G. Existing Surface Preparation:

1. General:

a. Remove and replace or mask attachments if attachments are not to be coated.

b. Remove surface contamination such as oil, grease, loose or otherwise defective paint, mill scale, dirt, foreign matter, rust, mold, mildew, mortar, efflorescence, and sealers to assure sound bonding to tightly adhering old paint. Glossy surfaces of old paint films shall be clean and dull before repainting.

c. Sand surfaces and feather edges where chipped surfaces occur.

d. Cut out and fill cracks or other defects in existing surface to match adjoining surfaces.

e. Exact nature of existing coatings arenature of existing coatings is not known in all cases. While it is assumed they have oxidized sufficiently to prevent lifting or peeling when overcoated with coatings or paints specified, check compatibility by application to small area prior to starting coating. If lifting or other problems occur, notify ENGINEER for direction.

f. Comply with new coating manufacturer's recommendations for preparation of previously painted or coated surfaces.

2. Existing ferrous metal surfaces subject to chemical, submerged or splash conditions: As specified for ferrous metals.

3. Existing masonry surfaces subject to chemical, submerged, or splash conditions: As specified for masonry.

4. Existing concrete and precast concrete surfaces subject to chemical or splash conditions: As specified for concrete and precast.

3.4 APPLICATION

A. General Requirements:

1. Spread evenly and flows on smoothly without runs, lumps or sags.

2. Make edges of coating adjoining other materials or colors sharp and clean without overlapping.

3. Number of coats and film thickness required is same regardless of application method. Do not apply succeeding coats until previous coat has cured as required by manufacturer. Where sanding is required, according to manufacturer's direction, sand between applications to produce smooth, even surface.

4. Finish edges of doors as specified for faces. Apply one coat finish on tops and bottoms of doors after fitting.

5. Term "exposed surfaces" includes areas visible when permanent or built-in fixtures, convector covers, covers for finned tube radiation, grilles, and similar components are in place. Extend coatings in these areas, as required, to maintain system's integrity and provide desired protection.

a. Coat surfaces behind movable equipment and furniture same as similar exposed surfaces.

b. Coat backsides of access panels, removable or hinged covers, and similar hinged items to match exposed surfaces.

c. Omit first coat on metal surfaces that have been shop-primed and touch-up painted.

6. Manufacturer-Applied Coating Systems:

a. Repair abraded areas on factory-finished items in accordance with manufacturer's directions.

b. blend repaired areas into original finish.

7. Existing Surfaces:

a. If finish coat will not produce uniform coverage, provide first coat base over existing Work.

b. Where ceilings or walls scheduled for patching or remodeling, coat entire ceiling or wall in that area.

c. At altered rooms, wherever new Work adjoins existing Work, finish new Work to match existing. Apply first coats as specified for new Work on new Work and wash adjacent existing coated surfaces and apply finish coat(s) over entire area.

8. Application Procedures:

a. Apply coatings by brush, roller, spray, or other applicators according to manufacturer's instructions.

B. Priming and Sealing:

1. Refer to Coating Schedule for specific coating material.

2. Shop:

a. Shop first coat for ferrous metal shall comply with SSPC guidelines, and as specified in Coating Schedules of this Specification.

b. Hand or power sand chipped, peeled or abraded first coat and feather edges. Spot coat areas with specified first coat.

c. Prior to application of finish coats, clean shop-first coat surfaces free of dirt, oil, and grease.

d. Prepare and prime holdback areas as required for specified coating system.

3.5 FIELD QUALITY CONTROL

A. Sampling of Materials:

1. ENGINEER reserves right to select unopened containers of materials furnished for project and have materials tested at an independent testing laboratory. CONTRACTOR will pay for first tests.

2. Retests of rejected materials and tests of replacement materials shall be paid for by CONTRACTOR.

3. Remainder of contents of containers not required for testing will be returned to CONTRACTOR.

B. Coverage:

1. If coverage is not acceptable to ENGINEER, ENGINEER reserves right to require extra application of paint at no extra cost to COMPANY.

2. Work at site where coat of material is applied will be inspected by ENGINEER before application of succeeding specified coat, otherwise no credit for coat applied will be given

and CONTRACTOR automatically assumes responsibility to recoat Work in question. Furnish ENGINEER report of particular coat applied and when completed for inspection to comply with above.

3.6 COATINGS SCHEDULE

A. General:

1. Unless otherwise noted, Tnemec products are identified in this schedule to establish quality and type desired only.

2. Scheduled thickness or coverage rate is as recommended by Tnemec. If other manufacturers are proposed and accepted, manufacturer's requirements shall be followed, but in no case may thickness or coverage rate be less.

3. DFT = dry film thickness (mils/coat). DFT shown is for spray application. Additional coats may be required if brushed and rolled.

4. sfpg = sq ft/gal (per coat).

5. Examples of surfaces to be coated are not all inclusive.

B. Coating Schedule:

C CONCRETE / MASONRY

C1 Interior – Floor Sealer

Surface Preparation	SSPC-SP13
Primer Coat	Tnemec Series 280 TnemeGlaze; ≥ 5.0 – 6.0 DFT, Non-Slip Finish broadcast 30-50 grit silica into the first coat while still wet to the desired concentration.
Finish Coat	Tnemec Series 280 TnemeGlaze; ≥ 5.0 – 6.0 DFT.

C2 Exterior

Surface Preparation	Clean and Dry
Primer Coat	Series 180 or 181 W.B. Tneme-Crete; ≥ 6.0 DFT
Finish Coat	Series 180 or 181 W.B. Tneme-Crete; ≥ 6.0 DFT

C7 Buried Below Grade

Surface Preparation	SSPC-SP13
Finish Coat	Series 46-465 H.B. Tnemecol; ≥ 10.0 DFT

C8 Chemical Splash - General

Surface Preparation	SSPC-SP13
Primer Coat	Series 61 Tneme-Liner; ≥ 5.0 DFT
Finish Coat	Series 61 Tneme-Liner; ≥ 5.0 DFT

S STEEL

S1 Interior

Surface Preparation	SSPC-SP6
Primer Coat	Series 66 or N69 Hi-Build Epoxoline; ≥ 4.0 DFT
Finish Coat	Series 66 or N69 Hi-Build Epoxoline; ≥ 5.0 DFT

S2 Exterior

Surface Preparation	SSPC-SP6
Primer Coat	Series 90-97 Tneme-Zinc; ≥ 3.0 DFT
Intermediate Coat	Series 27 Typoxy or Series 66 Epoxoline; ≥ 2.5 DFT
Finish Coat	Series 73, 1074 or 1075 Endura-Shield; ≥ 3.5 DFT

I IRON

I1 Interior

Surface Preparation	per manufacturer
Primer Coat	Series 66 or N69 Hi-Build Epoxoline; ≥ 4.0 DFT
Finish Coat	Series 66 or N69 Hi-Build Epoxoline; ≥ 5.0 DFT

I2 Exterior

Surface Preparation	per manufacturer
Primer Coat	Series 66 or N69 Hi-Build Epoxoline; ≥ 4.0 DFT

Intermediate Coat	Series 66 or N69 Hi-Build Epoxoline; ≥ 5.0 DFT
Finish Coat	Series 73, 1074 or 1075 Endura Shield; ≥ 2.5 DFT

I3 Buried Below Grade

Surface Preparation	per manufacturer
Primer Coat	Series 46H-413 Hi-Build Tneme-Tar
Finish Coat	Series 46H-413 Hi-Build Tneme-Tar; ≥ 17.0 DFT

I4 Submerged

Surface Preparation	per manufacturer
Primer Coat	Series 66 or N69 Hi-Build Epoxoline; ≥ 4.0 DFT
Finish Coat	Series 66 or N69 Hi-Build Epoxoline; ≥ 5.0 DFT

M NON-FERROUS METAL

M1 Interior

Surface Preparation	per manufacturer
Primer Coat	Series 66 or N69 Hi-Build Epoxoline; ≥ 2.5 DFT
Finish Coat	Series 73, 1074 or 1075 Endura-Shield; ≥ 2.5 DFT

M2 Exterior

Surface Preparation	per manufacturer
Primer Coat	Series 66 or N69 Hi-Build Epoxoline; ≥ 2.5 DFT
Finish Coat	Series 66 or N69 Hi-Build Epoxoline; ≥ 2.5 DFT

M3 Submerged

Surface Preparation	SSPC SP-1 - Brush-Off Blast
Primer Coat	Series 66 or N69 Hi-Build Epoxoline; ≥ 4.0 DFT
Finish Coat	Series 66 or N69 Hi-Build Epoxoline; ≥ 5.0 DFT

P	PLASTIC

P1 Interior

Surface Preparation	Tack Coat
Finish Coat	Devoe Water Base Paint; ≥ 4.0 DFT

P2 Exterior

Surface Preparation	Tack Coat
Primer Coat	Devoe Water Base Paint; ≥ 1.5 DFT
Finish Coat	Devoe Water Base Paint; ≥ 3.0 DFT

3.7 ADDITIONAL COATING REQUIREMENTS

A. Where noted in drawings, additional coating may be required on surfaces to protect against vandalism or graffiti.

1. Protective coating shall be ND Graffiti Shield as provided by New Dimensions Solutions, LLC or approved equal.

2. Apply coating per manufacturer's recommendations or as follows:

a. Apply four (4) separate coats. Allow each coat to dry completely before applying successive coats.

b. Porous materials (concrete/masonry, stucco): Use a coverage rate of approximately 250 square feet per gallon.

c. Semi-porous materials (wood): Use a coverage rate of approximately 500 square feet per gallon.

d. Non-porous materials (metal, plastic): Use a coverage rate of approximately 500 square feet per gallon.

3.8 SYSTEMS COLOR CODING AND LABELING SCHEDULE

A. Colors for piping and equipment in piping systems are to be selected and approved by COMPANY.

B. Provide banding and labels.

3.9 FINAL TOUCH-UP

A. Prior to Substantial Completion, examine coated surfaces and retouch or refinish to leave surfaces in condition acceptable to ENGINEER.

B. After doors have been fitted and hung, refinish edges, tops, and bottoms.

3.10 CLEANING

A. Before Substantial Completion, remove masking, coating, and other material from floors, glass, and other surfaces and remove rubbish and accumulated materials of whatever nature not caused by other trades from premises and leave in clean, orderly condition, with floors broom clean.

3.11 COATING INSPECTION

A. Contractor must subcontract with one of the Company's approved inspectors listed in Section ii. below, to inspect and approve interior and exterior surface preparation and coatings.

B. Prior to shipment, inspector must inspect and approve surface preparation, coating and condition of any of the above described components that are coated at an off-site shop/facility. Contractor must pay the cost for initial inspections and required re-inspections. Contractor must provide inspection report(s) to Company within 48 hours of receiving the inspection report(s) from the inspector.

C. Company's approved inspectors are as follows:

Mr. Greg Sprinkle

Industrial Inspection and Consulting, LLC

P.O. Box 51026

Phoenix, AZ 85076

Mr. Patrick Sweeney

CSI Services, Inc.

P.O. Box 801357

Santa Clarita, CA 91380

D. Inspections for components must include, but not be limited to:

1. Pre-blast inspection: salt testing, equipment check, and blasting media inspection

2. Post-blast inspection: conformance with applicable surface preparation standard (SSPC), profile, temperature, mixing ratios, and spray equipment

3. Coating inspection: DFT and holiday

4. Rework inspection: final field and/or shop inspections

5. Onsite inspection: prior to loading media and/or filling with water fto check for damage from shipping/assembly.

E. Contractor must pay for the cost for initial inspections and required re-inspections. Contractor must provide inspection report(s) to Company within 48 hours of receiving the inspection report(s) from the inspector.

3.12 WARRANTY COATING INSPECTION

A. Approximately eleven (11) months after Contractor's completion of the work and Company's acceptance of the completed work, Contractor must schedule with one of the Company's approved coating inspectors a date for an inspections of all interior and exterior coating work completed, and must notify Company of such date at least thirty (30) days in advance. Contractor must pay the cost of all labor, materials, permit(s) and water to repair coating defects identified as a result of the inspection which may include but not be limited to the following:

1. Coating repair

2. Removal and replacement of equipment and related fittings

3. Dewatering tanks and vessels

4. Removal and replacement filter vessel media

5. Permits

6. Water flushed to atmosphere to return the equipment to service

7. Clean-up, removal and disposal waste materials

8. Restore site to condition prior to the start of repair work

B. Contractor must complete coating repairs within thirty (30) days of the inspection.

3.13

3.14 COATING SCHEDULE

Coating Schedule

PIPING AND VESSELS	PIPE COLOR	BANDS	LETTERING	BACKGROUND
WATER				
Potable Water	Blue	White	Black	Blue
Raw Water	Dk. Green		Black	Lt. Gray

Non-Potable Water	Red		White	Red
Pressure Vessels	Brown		Black	Lt. Gray
AIR AND GAS				
Compressed Air	Green	Red	Black	Yellow
CHEMICALS				
Chlorine Solution	Yellow		Black	Yellow
Chlorine Liquid	Yellow		Black	-
PROCESS				
Drains	Gray		Black	Green
Storage Tank Drains	Gray		Black	Green
Storm Drains	Gray		Black	Green
Sump Drains	Gray		Black	Green
Acid Drains	Black	Yellow	Black	Yellow
Storage Tank	Brown		Black	Green
EXPOSED ELECTRICAL CONDUITS				
120V/ 480V/ 4160V	Orange or Match Wall		Black	Yellow
SAMPLE LINE PIPING				
Non Raw Water Sample Lines	Dk. Green		Black	Lt. Blue
Process Sample Lines	Lt. Gray	Red	Black	Lt. Blue

END OF SECTION

Page left intentionally blank

SECTION 10 40 00 – IDENTIFYING DEVICES

PART 1 GENERAL

1.1 SUMMARY

A. This Section covers the work necessary to furnish and install general signage for the Project.

1.2 REFERENCE STANDARD:

A. American National Standards Institute (ANSI).

1. ANSI A13.1 – Scheme for the Identification of Piping Systems.
2. ANSI A117.1 - Accessible and Usable Buildings and Facilities.

B. Occupational Safety and Health Administration (OSHA).

1. OSHA 1910.146 – Permit-required confined spaces.

1.3 SUBMITTALS

A. As specified in Section 01 33 00, Submittal Procedures.

B. Related Section: 09 90 00 Paintings and Coating.

C. Manufacturer's Data

1. Provide specifications and installation instructions for each type of sign required.

D. Samples - Submit three full size samples of each color and finish of pipe labeling, process equipment nameplates, and warning signs with sample letters.

1. Engineer's review of samples will be for color and texture only.
2. Submit samples of any other special signing provided elsewhere in this specification.

PART 2 PRODUCTS

2.1 PIPE LABELING

A. Unless noted otherwise in the Drawings or specified differently hereinafter, provide pipe labeling and colors according to the following schedule as identified in 09 90 00 Paintings and Coating.

B. Provide pipe identification labels and flow direction arrows consisting of lettering and symbols applied over the pipe base color.

2.2 PAINTED SIGNS

A. Provide miscellaneous painted signs where noted in the Drawings and as required by the Engineer.

B. Minimum size: 6” x 2” or as otherwise noted.

2.3 NAMEPLATES

A. Use nameplates to identify utility vaults, generators, water or fuel tanks, yard hydrants, control panels, and any other general utility items requiring identification as directed by the Engineer.

B. Fabricated from 1/16-inch-thick satin-surfaced Setonply, all edges beveled neatly.

C. Furnish with drilled holes for mounting to the appropriate equipment or nearest adjacent surface.

1. As an alternative, acceptable adhesive attachment methods may be used if approved by the Engineer.

D. Provide nameplate background color, lettering color, and wording as directed by the Engineer and approved by the Owner.

E. Minimum Size: 4-inch x 1-1/2-inch.

F. Manufacturer:

1. Seton Nameplate Company, Style 2060-40.

2. Or equal.

2.4 CONFINED SPACE WARNING SIGNS

A. In accordance with OSHA 1910.146

EXECUTION

2.5 PIPE LABELS

A. Location:

1. At connections to equipment, valves, branching fittings, at wall boundaries, and at intervals along the piping not greater than 5 feet on center with at least one label applied to each exposed horizontal and vertical run of pipe.

2. Label exposed piping not normally in view, such as behind ceilings and in closets and cabinets.

B. Do not apply labels to the pipe until pipe painting is complete or as approved by the Engineer.

C. Application:

1. By stencil over pipe base color. Cure, clean, and dry base coat prior to application of lettering.

D. Provide lettering sizes for pipe labels in accordance with ANSI A13.1 and based upon the outside diameter of the pipe to which they are applied.

E. Apply stripes on solution pipe at intervals along the piping not greater than 5 feet on center with at least one stripe applied to each exposed horizontal and vertical run of pipe.

2.6 NAMEPLATES

A. Location: As directed by the Engineer.

B. Mount process equipment nameplates in accordance with the Manufacturer's instructions, and as directed by the Engineer.

2.7 PAINTED SIGNS

A. Prepare and mask base material as required to provide clean surface for application of letters by stencil.

B. Unless otherwise noted, provide black color for letters.

C. Paint Type: Semi-gloss alkyd enamel.

2.8 CONFINED SPACE WARNING SIGNS

A. Securely fasten signs to the underside of hatches entering vaults such that the sign can be read when the hatch is opened.

END OF SECTION

Page left intentionally blank.

SECTION 26 00 00

GENERAL REQUIREMENTS FOR ELECTRICAL WORK

PART 1--GENERAL

1.01 DESCRIPTION

A. SCOPE:

This section specifies general requirements for electrical work. Detailed requirements for specific electrical items are specified in other sections but are subject to the general requirements of this section. The electrical drawings and schedules included in this project manual are functional in nature and do not specify exact locations of equipment or equipment terminations.

B. DEFINITIONS:

1. ELEMENTARY OR SCHEMATIC DIAGRAM: A schematic (elementary) diagram shows, by means of graphic symbols, the electrical connections and functions of a specific circuit arrangement. The schematic diagram facilitates tracing the circuit and its functions without regard to the actual physical size, shape, or location of the component devices or parts.

2. ONE-LINE DIAGRAM: A one-line diagram shows by means of single lines and graphical symbols the course of an electrical circuit or system of circuits and the components, devices or parts used therein. Physical relationships are usually disregarded.

3. BLOCK DIAGRAM: A block diagram is a diagram of a system, instrument, computer, or program in which selected portions are represented by annotated boxes and interconnecting lines.

4. WIRING DIAGRAM OR CONNECTION SYSTEM: A wiring or connection diagram includes all of the devices in a system and shows their physical relationship to each other including terminals and interconnecting wiring in an assembly. This diagram shall be (a) in a form showing interconnecting wiring only by terminal designation (wireless diagram), or (b) a panel layout diagram showing the physical location of devices plus the elementary diagram.

5. INTERCONNECTION DIAGRAM: Interconnection diagrams shall show all external connections between terminals of equipment and outside points, such as motors and auxiliary devices. References shall be shown to all connection diagrams which interface to the interconnection diagrams. Interconnection diagrams shall be of the continuous line type. Bundled wires shall be shown as a single line with the direction of entry/exit of the individual wires clearly shown. Wireless diagrams and wire lists are not acc
eptable.

Each wire identification as actually installed shall be shown. The wire identification for each end of the same wire shall be identical. All devices and equipment shall be identified. Terminal blocks shall be shown as actually installed and identified in the equipment complete with individual terminal identification.

All jumpers, shielding and grounding termination details not shown on the equipment connection diagrams shall be shown on the interconnection diagrams. Wires or jumpers shown on the equipment connection diagrams shall not be shown again on the interconnection diagram. Signal and DC circuit polarities and wire pairs shall be shown. Spare wires and cables shall be shown.

6. ARRANGEMENT, LAYOUT, OR OUTLINE DRAWINGS: An arrangement, layout, or outline drawing is one which shows the physical space and mounting requirements of a piece of equipment. It may also indicate ventilation requirements and space provided for connections or the location to which connections are to be made.

1.02 QUALITY ASSURANCE

A. REFERENCES:

This section contains references to the following documents. They are a part of this section as specified and modified. In the event of conflict between the requirements of this section and those of the listed documents, the requirements of this section shall prevail.

Reference	Title
NECA-1	National Electrical Contractors Association – Standard Practices for Good Workmanship in Electrical Contracting
NFPA	National Fire Protection Association
NFPA-70	National Electrical Code (NEC)
NFPA-70E	National Electrical Safety Code (NESC)
ACI 318	Building Code Requirements for Structural Concrete

B. IDENTIFICATION OF LISTED PRODUCTS:

Electrical equipment and materials shall be listed for the purpose for which they are to be used, by an independent testing laboratory. Three such organizations are Underwriters Laboratories (UL), Canadian Standards Association (CSA), and Electrical Testing Laboratories (ETL). Independent testing laboratory shall be acceptable to the inspection authority having jurisdiction.

When a product is not available with a testing laboratory listing for the purpose for which it is to serve, the product may be required by the inspection authority, to undergo inspection at the manufacturer's place of assembly. All costs and expenses incurred for such inspections shall be included in the original contract price.

C. FACTORY TESTS:

Where specified in the individual product specification section, factory tests shall be performed at the place of fabrication and performed on completion of manufacture or assembly. The costs of factory tests shall be included in the contract price.

1.03 SUBMITTALS

The following submittals shall be provided:

1. A copy of this specification section, with addendum updates included, and all referenced and applicable sections, with addendum updates included, with each paragraph check-marked to indicate specification compliance or marked to indicate requested deviations from specification requirements.

   Check marks shall denote full compliance with a paragraph as a whole. If deviations from the specifications are indicated, and therefore requested by the Contractor, each deviation shall be underlined and denoted by a number in the margin to the right of the identified paragraph, referenced to a detailed written explanation of the reasons for requesting the deviation.

   The Arizona Water Company's (AWC's) Project Manager shall be the final authority for determining acceptability of requested deviations. The remaining portions of the paragraph not underlined will signify compliance on the part of the Contractor with the specifications.

   Failure to include a copy of the marked-up specification sections, along with justification(s) for any requested deviations to the specification requirements, with the submittal shall be sufficient cause for rejection of the entire submittal with no further consideration.

2. Catalog cuts of equipment, devices, and materials requested by the individual specification sections. Catalog information shall include technical specifications and application information, including ratings, range, weight, accuracy, etc. Catalog cuts shall be edited to show only the items, model numbers, and information which apply.

   Catalog cuts shall be assembled in a folder. Each folder shall contain a cover sheet, indexed by item, and cross-referenced to the appropriate specification paragraph.

3. Interconnection diagram: The Contractor shall prepare interconnection diagrams depicting all cable requirements together with their actual terminations as specified in paragraph 26 00 00-1.01 B.

4. Conduit layout drawings indicating size, location, and support, for all conduits other than single runs of 1-inch diameter or less cast in concrete construction.

   a. Conduit layout drawings shall illustrate a system which conforms to the requirements of paragraph 26 00 00-3.01-B.

   b. For layouts that do not conform to 26 00 00-3.01 B, provide engineering design and calculations signed and sealed by a Professional Engineer registered in the state of the project. Engineering design and calculations shall demonstrate that the proposed layout does not impair or significantly reduce the design structural strength.

5. Safety disconnect switch list including legend with equipment tag, equipment description, and power feeder circuit source and location information.

1.04 DRAWINGS

Where the Contractor is required to provide information on drawings as part of the specified work, such drawings shall be prepared on 24-inch by 36-inch heavy weight bond drafting media complete with borders and title blocks clearly identifying project name, equipment and the scope of the drawing.

Drawing quality and size of presentation shall be such as to permit 50 percent reduction of such drawings for insertion in operation and maintenance manuals.

1.05 PROJECT/SITE CONDITIONS

A. GENERAL:

Unless otherwise specified, equipment and materials shall be sized and derated for the ambient conditions specified in Section 01800, but not less than an ambient temperature of 40 degrees C at an elevation ranging from sea level to 3000 feet without exceeding the manufacturer's stated tolerances.

B. CORROSIVE AREAS:

The following areas are designated as corrosive:

1. Acetic Acid
2. Sodium Hydroxide
3. Phosphoric Acid
4. Sodium Hypochlorite
5. Aluminum Chlorohydrate
6. Ferric Chloride

C. HAZARDOUS (CLASSIFIED) AREAS:

The following areas are designated as hazardous (classified) in accordance with the NEC:

Area	Hazardous Classification

D. SEISMIC:

Electrical equipment, supports, and anchorage shall be designed and installed in accordance with the seismic design requirements for the State of Arizona and for the project location.

1.06 STORAGE OF MATERIALS AND EQUIPMENT

Equipment and materials to be located indoors shall be stored indoors and sealed with plastic film wrap.

1.07 ELECTRICAL NUMBERING SYSTEMS

A. RACEWAY NUMBERS:

Raceways shall be tagged at all terminations. Contractor shall assign raceway numbers in accordance with the following system where raceway numbers have not been assigned:

Raceway Prefix	Type of Function
C	Control or power - 120V or less
H	Power above 600V
N	Pneumatic tubing
P	Power 208V to 600V
S	Signal - data communication or instrumentation
X	Spare

Prefixes shall be followed by a 4-digit number. Add a letter suffix to distinguish the raceways where more than one raceway is routed to a particular piece of equipment. Example:

Raceway number = P3109A where:
P = conduit contains power
3109 = unique 4-digit number
A = letter to distinguish raceways to same equipment

B. CONDUCTOR NUMBERS:

Conductors shall be identified with numbers at both ends. Conductor tag numbers shall consist of the equipment number followed by a dash followed by the conductor number specified on the control diagram. Example:

Equipment Tag number = 1900 - L1 where:
1900 = cable number
L1 = conductor number

Conductors in parallel or in series between equipment shall have the same conductor number. Neutral conductors shall have the same conductor number. Wherever possible, the conductor number shall be the same as the equipment terminal to which it connects.

Where factory-wired equipment has terminal numbers different than the conductor numbers shown on the control diagrams:

1. Both shall be shown on the interconnection diagram.

2. Include a copy of the interconnection diagram inside of the equipment cabinet.

1.08 INDICATING LAMP COLORS

Refer to Section 26 01 75 – Miscellaneous Electrical Devices or to Section 26 01 76 – Local Control Panels for indicating lights colors for process and electrical equipment.

PART 2--PRODUCTS

2.01 EQUIPMENT AND MATERIALS

A. GENERAL:

Equipment and materials shall be new and free from defects. All material and equipment of the same or a similar type shall be of the same manufacturer throughout the work. Standard production materials shall be used wherever possible.

B. EQUIPMENT FINISH:

Electrical equipment shall be factory finished / painted by the manufacturer.

2.02 WIRE MARKERS

Each power and control conductor shall be identified at each terminal to which it is connected. Conductors size No. 10 AWG or smaller shall have identification sleeves. Conductors No. 8 AWG and larger shall use cable markers of the locking tab type. Tabs shall be white plastic with conductor identification number permanently embossed.

Conductors shall be identified in accordance with paragraph 26 00 00-1.07 B. Adhesive strips are not acceptable.

The letters and numbers that identify each wire shall be machine printed on sleeves with permanent black ink with figures 1/8 inch high. Sleeves shall be yellow or white tubing and sized to fit the conductor insulation. Shrink the sleeves with hot air after installation to fit the conductor.

Conductor and Wire Marker Manufacture:

1. TMS Thermofit Marker System by Raychem Co
2. Sleeve style wire marking system by W. H. Brady Co.
3. or equal.

2.03 RACEWAY MARKERS

Raceway markers tags shall be:

1. Solid brass or solid aluminum with 0.036-inch minimum thickness.
2. Raceway number stamped in 3/16-inch minimum height characters
3. Attached to the raceway with 316 stainless steel wire.

2.04 NAMEPLATES

Nameplates shall be made from stainless steel where appropriate and laminated phenolic plastic:

1. Nominal size: 3/4 inch high by 2 inches long.
2. White backgrounds with 3/16-inch black letters.
3. Fastened using self-tapping stainless steel screws.

Abbreviations shall be submitted prior to manufacture because of space limitations. Nameplate adhesives will not be permitted on the outside of enclosures.

2.05 TERMINAL BLOCKS

Unless otherwise specified, terminal blocks shall be panhead strap screw type. Terminals shall be provided with integral marking strips that permanently identify with the connecting wire numbers as shown on the drawings:

1. Terminal blocks for Power circuits (120-600 volts)

    a. Rated not less than the conductor current rating
    b. Rated less than 600 volts AC.

2. Terminal blocks for Control circuits and Signal circuits:

    a. Rated not less than 20 amperes
    b. Rated less than 600 volts AC.

3. Terminals shall be tin-plated.
4. Insulating material shall be insulating non-metal or nylon.

2.06 PRODUCT DATA

The following information and product data specified under individual specification sections shall be provided.

1. Operation and maintenance information shall be provided at the time of equipment, device, or material site delivery, or at project completion, whichever is the earlier. Full-size drawings shall be reduced to 11 x 17 inches.

2. Test results for motors and electrical systems on the forms specified in Section 26 00 30. A file of the original test results shall be maintained by the Contractor. Prior to acceptance of work, the resulting file shall be provided to AWC.

3. Description of functional checkout procedures specified under paragraph 26 00 00-3.02 C shall be provided 7 days prior to performing functional checkout tests.

4. Record documents specified in paragraph 26 00 00-3.03.

PART 3--EXECUTION

3.01 GENERAL

A. CONSTRUCTION:

The work under Division 26 shall be performed in accordance with these specifications.

Refer to the National Electrical Contractors Association's (NECA) National Electrical Installation Standards (NEIS) for Standard Practices for Good Workmanship in Electrical Contracting (NECA-1) as a minimum baseline of quality and workmanship for installing electrical products and systems that defines what is meant by "neat and workmanlike" as required by the National Electrical Code Section 110-12. Specified requirements supersede NECA practices.

Electrical layout drawings are diagrammatic, unless otherwise detailed or dimensioned. The Contractor shall coordinate the location of electrical material or equipment with the work.

Major electrical openings may compromise the structural integrity of the slab and wall elements. Major electrical openings are defined as openings or penetrations greater than two times the wall thickness in any dimension, and include duct bank transitions into a building through structural elements. Major electrical openings shall be constructed according to standard details on the drawings, up to an opening dimension of three feet. For opening dimensions greater than three feet, construct walls and slabs as specifically detailed on the drawings for that case. Major electrical openings proposed by the Contractor shall be submitted to the Structural Engineer of Record for the project for review.

Minor changes in location of electrical material or equipment made prior to installation shall be made at no cost to AWC.

B. CONDUITS IN CONCRETE CONSTRUCTION:

Conduits for power, control and instrumentation may be embedded in and pass through concrete construction subject to the limitations in this paragraph. Where concrete strength or serviceability requirements prevent the direct embedment of conduit, provide adequate support, bracing, and serviceability details:

1. Concrete strength shall not be impaired significantly by the embedment of conduits in or through structural sections.

2. Conduit layout shall conform to the requirements of ACI 318, Sections 3.3 – Aggregates and 6.3 – Conduits and Pipes Embedded in Concrete.

3. Conduits shall be treated similarly to reinforcing steel for purposes of clearance. In general, code sections require conduit spacing the greater of:

   a. 1.33 times the maximum concrete aggregate size, clear
   b. Three diameters center to center

Alternate spacing and layout shall be as reviewed and accepted by AWC.

4. Conduit and raceway penetrations through walls and slabs where:

   a. one side is a conditioned or an occupied space and the other side not, or
   b. one side has liquid or groundwater contact and the other not, shall be detailed and constructed to prevent liquid and moisture penetration through the wall or slab section for each conduit.

C. HOUSEKEEPING:

Electrical equipment shall be protected from dust, water and damage. Motor control centers, switchgear, and buses shall be wiped free of dust and dirt, kept dry, and shall be vacuumed on the inside within 30 days of acceptance of the work.

Before final acceptance, the Contractor shall touch up any scratches on equipment. Electrical equipment temporarily exposed to weather, debris, liquids, or damage during construction shall be protected.

D. ELECTRICAL EQUIPMENT LABELING

Electrical equipment shall have field marked signs and labeling to warn qualified persons of the potential electric arc flash hazards per NEC Article 110.16 Flash Protection.

Electrical equipment shall have NFPA 70E labels installed stating the results of the Arc Flash analysis specified in Section 26 04 31 Short Circuit and Protective Device Coordination Study Report.

Electrical distribution equipment and utilization equipment shall be field labels to identify the power source and the load as specified. Refer to NEC Article 110.22 for Identification of Disconnecting Means installation criteria. Specific information is required such as the equipment tag number and equipment description of both the power source and the load equipment.

E. SAFETY DISCONNECT SWITCHES:

Heavy duty fused and non-fused disconnect switches with current range of 30 to 600 amperes shall be provided as shown on the drawings with the enclosure type matching the area rating. Provide lock-off provision for a hasp padlock. Provide visible knife blades through a cover viewing window. Provide shielded or insulated line terminals with quick-make / quick-break switch operator. Provide internal barrier kit for additional personnel barrier from accidental contacts with live parts. Provide a legend plate with equipment tag, equipment description, and power feeder circuit source and location identification.

Disconnects shall include one auxiliary contact that operates with the power switch blades. The auxiliary contact shall be wired as shown on the drawings for remote status monitoring of the disconnect position where shown or for disconnecting motor space heater where shown.

Fuse clips shall be Class R rejection type and sized for UL Class R, one-time, time-delay fuses. Fuse assembly shall have a minimum short circuit capacity of 100,000 amps symmetrical. Provide fuses as shown and one set of spare fuses with each switch.

F. MOTOR CONNECTIONS

Verify that the motors are purchased with the correct size motor termination boxes for the circuit content specified as shown on the power single line diagrams or submit custom fabrication drawing indicating proposed motor termination box material, size, gasket, termination kit, grounding terminal, motor lead connection method, and motor terminal box connection/support system. Verify the motor termination box location prior to raceway rough-in.

H. CONDUCTOR INSTALLATION

An enclosure containing disconnecting means, overcurrent devices, or electrical equipment shall not be used as a wireway or raceway for conductors not terminating within the enclosure. Provide wireways, raceways, termination boxes, or junction boxes external to the enclosure for the other conductors.

3.02 TESTING

A. GENERAL:

Prior to energizing the electrical circuits, insulation resistance measurements tests shall be performed using a 1000-volt megohmmeter to verify the conductor is acceptable for use on the project. The test measurements shall be recorded on the specified forms and provided in accordance with paragraph 26 00 00-1.03.

B. INSULATION RESISTANCE MEASUREMENTS:

1. GENERAL: Insulation resistance measurements shall be made on conductors and energized parts of electrical equipment. Minimum acceptable values of insulation resistance shall be in accordance with the applicable ICEA, NEMA or ANSI standards for the equipment or material being tested, unless otherwise specified. The ambient temperature at which insulation resistance is measured shall be recorded on the test form.

Insulation with resistance of less than 10 megohms is not acceptable.

2. CONDUCTOR AND CABLE TESTS: The phase-to-ground insulation resistance shall be measured for all circuits rated 120 volts and above except lighting circuits. Measurements may be made with motors and other equipment connected. Solid state equipment shall be disconnected, unless the equipment is normally tested by the manufacturer at voltages in excess of 1000 volts DC.

3. MOTOR TESTS: Shall be completed for each motor after installation.

Motors shall have their insulation resistance measured before they are connected. Motors 50 horsepower and larger shall have their insulation resistance measured at the time of delivery as well as when they are connected. Insulation resistance values less than 10 megohms are not acceptable.

C. PRE-FUNCTIONAL TEST CHECKOUT:

Functional testing shall be performed in accordance with the requirements of Section 26 00 30. Prior to functional testing, all protective devices shall be adjusted and made operative.

1. Submit a description of the proposed functional test procedures prior to the performance of functional checkout.

2. Prior to energization of equipment, perform a functional checkout of the control circuit. Checkout:

    a. Energizing each control circuit.
    b. Operating each control device, alarm device, or monitoring device.
    c. Operate each interlock to verify that the specified action occurs.

Verify motors are connected to rotate in the correct direction. Verification may be accomplished by momentarily energizing the motor, provided the Contractor confirms that neither the motor nor the driven equipment will be damaged by reverse operation or momentary energization.

3.03 RECORD DOCUMENTS

Contract documents shall be maintained and annotated by the Contractor during construction, including the record drawings.

END OF SECTION

SECTION 26 00 30

ELECTRICAL ACCEPTANCE TESTING

PART 1--GENERAL

1.01 DESCRIPTION

The electrical equipment and conductors to be tested are specified herein and shown on the electrical drawings of the Contract Documents.

The Contractor shall retain an independent InterNational Electrical Testing Association (NETA) member Engineering and Testing Firm (Testing Firm) for specified on-site acceptance testing of the project electrical power distribution system and utilization equipment covered by this contract.

The Testing Firm shall be responsible for the Short Circuit and Protective Device Coordination Report as specified in Section 26 04 31. The Testing Firm shall verify the protective device settings are implemented in accordance with Section 26 04 31. The Testing Firm work includes the Arc-Fault equipment labeling work as specified in Section 26 04 31.

Tests performed by the Testing Firm shall be witnessed by Arizona Water Company's (AWC's) Representative. Provide the AWG 30-day advanced notice for Testing Firm tests. Insulation tests by the Contractor typically will not be witnessed. Critical equipment witness testing may be requested.

The manufacturer of the electrical equipment supplied for the project shall complete their on-site factory inspection, testing, and setup prior to the Testing Firm's Acceptance Testing and subsequent Protective Device setting verification work. The power monitors shall be set up by the factory representatives and power monitor readings and settings verified by the Testing Firm. Manufacturer work is specified in the respective equipment sections.

The Installation Contractor shall test motors, conductors, and equipment as specified and shown. Contractor shall provide the labor, tools, material, including quality power sources required by the Testing Firm equipment, and other services necessary to provide specified tests and retesting.

Submit proposed electrical test procedures for tests to be performed by the Installing Contractor, other than insulation resistance testing, and proposed test procedures for tests to be performed by the Testing Firm.

1.02 REFERENCES

This section contains references to the latest published version of the InterNational Electrical Testing Association's (NETA) Acceptance Testing Specifications for Electrical Power Distribution Equipment and Systems (ATS).

The NETA acceptance testing specification (NETA ATS) including procedures and test forms is part of this section as specified and modified for this project. In case of conflict between the requirements of this section and NETA ATS document, the requirements of this section shall prevail.

1.03 TESTING APPLICATION

Calibrated test equipment with calibration stickers are required for electrical acceptance tests. The required tests, including correction of defects where found, and subsequent retesting, shall be completed prior to energizing electrical distribution system, utilization systems, and conductors and completed prior to functional testing. The installation of the protective device, breaker, and relay settings shall be completed and verified.

1.04 TESTING FIRM QUALIFICATIONS

The Testing Firm and their proposed project team shall possess the following minimum qualifications:

1. Testing Firm shall be an independent testing organization providing unbiased testing authority, professionally independent of the manufacturer, suppliers, and installers of equipment or systems to be evaluated by the Testing Firm.

2. Testing Firm shall be regularly engaged in the testing of electrical equipment, devices, installations, and systems.

3. Testing Firm shall be a member company of the InterNational Electrical Testing Association (NETA providing testing in accordance with NETA ATS published specifications or the pre-approve firms that use the NETA methods and published testing specifications.

4. If firm's own published testing specifications are proposed, then submit a copy for acceptance and submit the qualifications of the testing staff.

5. Testing Firm's lead technical person shall be currently certified by NETA or the National Institute for Certification in Engineering Technologies (NICET) in electrical power distribution systems testing. Submit proof of technical training and certification for performing testing work.

6. Testing Firm's technicians shall be regularly employed, qualified testing staff.

The following are pre-qualified Testing Firms:

1. Emerson Electrical Reliability Services
2. Sabino Electric

1.05 SUBMITTALS

Contractor shall submit the following information in accordance with specification Section 01300-Submittals:

A. TESTING FIRM QUALIFICATIONS:

For any Testing Firm not pre-qualified, the Contractor shall receive AWC approval of the proposed Testing Firm, their proposed project team, and their test procedures prior to the Pre-Test Submittals.

1. Project Team: Identify lead technical person and testing staff and provide documentation of training and experience demonstrating compliance with the qualifications specified.

2. Testing Firm: Provide reference names and current phone numbers of AWC, Contractor, Engineer, or Construction Manager that has knowledge of the Firm's work.

3. For Testing Firm's experience to be judged acceptable, the Contractor shall demonstrate that the proposed Testing Firm's reference projects are of similar scope and size to this project, and in performing these projects the following has been achieved:

    a. Testing Firm's work did not delay the projects or adversely impact the progress of the Contractor's work or the AWC's project.

    b. Specified requirements were achieved.

    c. Work was performed in accordance with NETA ATS, MTS, or other accepted testing criteria.

    d. Submittals approved with two or fewer re-submittals after the initial submittal.

    e. No warranty claims related to the Testing Firm's work.

4. Provide documentation demonstrating compliance with the qualification specified.

B. PRE-TEST SUBMITTALS:

1. Description or samples of specified test procedures.
2. Sample test report forms for the specified tests.
3. Preliminary Test Schedule.
4. Notification form for the work scheduled.
5. Pre-Functional test procedures and testing schedule.
6. Functional test procedures and testing schedule.

C. POST-TEST SUBMITTALS:

1. Completed Test Records:

    a. Wire and Cable Resistance Test Data Form
    b. Installed Motor Test Form

c. Dry Transformer Test Data Form

2. Test Reports specified in Part 3 of this Section.

PART 2--PRODUCTS

2.01 TESTING EQUIPMENT AND INSTRUMENTS

The test equipment, instruments and devices used for testing shall be calibrated to test equipment standards with references traceable to the National Institute of Standards and Technology.

The test equipment, instruments and devices shall have current calibration stickers indicating date of calibration, deviation from standard, name of calibration laboratory and technician, and date of next recalibration.

PART 3--EXECUTION

3.01 GENERAL

The Contractor shall submit a schedule for the Testing Firm work and notify AWC 30 days prior to commencement of any witnessed testing.

3.02 INSTALLATION CONTRACTOR TESTING

A. GENERAL:

The following specified tests, including correction of defects where found and the subsequent re-testing, shall be completed prior to energization of the equipment or systems. Submit all completed test report forms in a 3-ring binder type notebook at the project Substantial Completion date.

B. INSULATION RESISTANCE MEASUREMENTS:

1. TESTS: Insulation resistance measurements shall be made on conductors and electrical equipment that will carry current. Where not specified, the minimum acceptable values of insulation resistance shall be in accordance with the applicable NETA-ATS, ICEA, NEMA, or ANSI standards for the equipment or material being tested.

The ambient temperature at which insulation resistance is measured shall be recorded on the test form. A megohmmeter shall be used for insulation resistance measurements.

Refer to specification Section 01999-Reference Forms for the test forms required to document the testing performed by the Installing Contractor.

2. CONDUCTOR AND CABLE TESTS: The phase-to-ground insulation resistance shall be measured for circuits 120 volts and above except lighting circuits. Measurements may be made with motors

and other load equipment connected. Insulation resistance measurements shall be recorded on a Test Form, and submitted. Insulation with resistance of less than 100 megohms is not acceptable.

3. MOTOR TESTS: Provide an Installed Motor Test Form that shall be completed for each motor after installation and submitted. All motors shall have their insulation resistance measured before they are connected.

Motors 50 HP and larger shall have their insulation resistance measured at the time of delivery and when they are connected. Insulation resistance values less than 50 megohms are not acceptable.

Verify that motors are connected to rotate in the correct direction with the load disconnected. Verification may be accomplished by momentarily energizing the motor, provided the Contractor confirms that neither the motor nor the driven equipment will be damaged by reverse operation.

Motor running current shall be measured on each phase with the motor operating under load. Current imbalance shall be less than 5-percent difference between phases.

C. POWER DISTRIBUTION EQUIPMENT:

Transformers, panelboards, and other power distribution equipment shall have their insulation resistance measured phase-to-phase and phase-to-ground. Insulation resistance values less than 10 megohms are not acceptable.

D. POWER UTILIZATION EQUIPMENT:

Test receptacles and power outlets using a device to verify polarity, grounding, and the correct wiring connections.

E. SIGNAL AND DATA CABLE TESTS:

Signal conductors and shield drain shall be tested for insulation resistance with the other conductors in the cable grounded. Each shield drain conductor shall be tested for continuity.

Instruments used for continuity measurements shall have a resolution of 0.1 ohms and an accuracy of better than 0.1 percent of reading plus 0.3 ohms. A 500-volt or 1000-volt meg-ohmmeter shall be used for insulation resistance measurements as appropriate.

F. PRE-FUNCTIONAL CHECKOUT:

Prior to energizing equipment, the Contractor shall perform a pre-functional checkout of the power and the control circuit. Protective devices shall be installed and available for service and calibrated or adjusted with specified setpoints installed. Contractor selected initial setpoints shall be installed and recorded, when specified setpoints are not required from the manufacturer or AWC.

Contractor shall submit a description of proposed test and checkout procedures conforming to the following requirements, including a schedule for conducting these procedures, not less than 30 days prior to the performance of pre-functional testing.

Pre-functional checkout shall consist of energizing each control circuit and operating each control device, protective device, monitoring or alarm device, and each interlock and verify the specified action or response occurs. Coordinate testing with the requirements specified in Section 01660 – Equipment and System Performance and Operational Testing.

G. FUNCTIONAL TESTING:

Contractor shall submit a description of proposed functional test and checkout procedures conforming to the following requirements, including a schedule for conducting these procedures, not less than 30 days prior to the performance of functional testing.

Prior to functional testing, all protective devices shall be adjusted and made operative. Prior to energization of associated equipment, perform a functional checkout of all electrical and instrumentation control circuits. Checkout shall consist of energizing each control circuit and operating each control, alarm, safety device, and each interlock, in turn, to verify that the specified action occurs.

3.03 TESTING FIRM ACCEPTANCE TESTING REQUIREMENTS

A. ACCEPTANCE TEST REPORTS:

The Contractor shall maintain a written record of all inspection and test results and, upon completion of the project, shall assemble and certify a final test report

A copy of the preliminary test results shall be provided to the Construction Manager, AWC, at the end of each day of testing.

Furnish two copies of the complete acceptance testing final report at Substantial Completion of the project.

B. ACCEPTANCE TEST DOCUMENTATION:

The Contractor shall submit test documentation forms and a detailed description of the proposed inspection and test procedures to be performed by the Testing Firm. Testing shall not commence until the Construction Manager, AWC, has approved the proposed forms and procedures.

The description shall identify the test equipment required for each specified test to be performed. Test report forms shall include the following information:

1. Electrical equipment description.

2. Electrical equipment identification number.

3. Electrical equipment nameplate data.

4. Electrical equipment settings.

5. Time and date of test.

6. Ambient conditions at time of test.

7. Inspection checklist and results.

8. Test results.

9. Test equipment used with manufacture, model number, and calibration date.

10. Remarks about test procedures, results, and suggestions.

11. Name and signature of testing personnel.

12. Name and signature of test witness.

C. ACCEPTANCE TESTING FIRM TESTS:

Acceptance testing procedures and test results shall be as specified in NETA ATS. The following types of equipment and systems shall be inspected and tested by the Testing Firm. Acceptance testing work shall not be limited to equipment shown on the drawings.

Refer to the electrical drawings for location and identification of the electrical distribution system equipment, utilization equipment, and electrical conductors, included but not limited to:

1. [Switchgear and Switchboard Assemblies.]

2. [Transformers Dry-Type Air-Cooled.]

3. [Cables Low-Voltage 600 Volt Maximum.]

4. [Metal Enclosed Busway.]

5. [Air Switches Low Voltage.]

6. [Circuit Breakers Low-Voltage, 100A frame and larger.]

7. [Protective Relays.]

8. [Instrument Transformers.]

9. [Metering, include non-utility power metering equipment.]

10. [Grounding Systems include installed grounding systems and existing grounding systems that are being utilized.]

11. [Ground Fault Protection Systems.]

12. [Motors.]

13. [Motor Starters Low-Voltage.]

14. [Motor Control Centers Low-Voltage.]

15. [Adjustable Speed Drive Systems.]

16. [Direct-Current Systems.]

17. [Surge Protection Devices, include lightning arresters, surge capacitors, and TVSS.]

18. [Capacitors and Inductors.]

19. [Uninterruptible Power Systems (UPS).]

3.04 ACCEPTANCE TEST VALUES

Minimum acceptable test values shall be as specified in NETA ATS

Where acceptance test values are not specified, the equipment manufacturer's recommended test values shall be used.

Where acceptance test values are not specified and the equipment manufacturers recommended test values are not available, request acceptance test values from the Construction Manager, AWC.

3.05 ACCEPTANCE TEST FINAL REPORT

Test report shall be assembled as described in NETA ATS. Test results shall be organized by electrical distribution system equipment, project utilization equipment, and electrical conductors with individual tab dividers with labels to identify each group of items and cross-referenced to the Contract Documents. The equipment description, equipment number, and equipment tag number shall be used as shown on the drawings or listed in specifications.

Final Test Reports that are illogically assembled, labeled, and organized shall be returned for rework at no cost to AWC and resubmitted in an acceptable format.

Deficiencies and non-compliant test results found during acceptance testing shall be identified in the test report and cover letter. The Testing Firm shall certify in the final test report that all deficiencies and non-compliant test results listed have been "corrected" and shall include a description of the resolution for each problem listed.

3.06 PROTECTIVE DEVICE FIELD SETTINGS

The Testing Firm shall verify, and certify in the acceptance test final report, that the protective device coordination study settings for new and existing equipment based on the Short Circuit and Protective Device Coordination Report specified in Section 26 04 31 have been implemented and recorded on the Testing Firm's Data Sheets.

3.07 ARC FLASH STUDY RESULTS

The Testing Firm shall provide and install labels on the project electrical equipment for personnel protective clothing requirements as specified in Section 26 04 31.

END OF SECTION

SECTION 26 01 10

RACEWAYS, BOXES, AND SUPPORTS

PART 1--GENERAL

1.01 SCOPE

This section covers the furnishing and installation of electrical conduits, wireways, pull boxes, manholes, handholes, cable trays, fittings and supports. Raceways shall be provided for lighting, receptacles, power, control, instrumentation, signaling and grounding systems.

1.02 REFERENCES

This section contains references to the following documents. They are a part of this section as specified and modified. In the event of conflict between the requirements of this section and those of the listed documents, the requirements of this section shall prevail.

Reference	Title
ANSI C80.1	Rigid Steel Conduit-Zinc Coated
ANSI C80.3	Electrical Metallic Tubing-Zinc Coated
ASTM F512	Smooth-Wall Polyvinylchloride Conduit and Fittings for Underground Installation
FEDSPEC WW-C-581E	Conduit, Metal, Rigid and Intermediate; and Coupling, Elbow, and Nipple, Electrical Conduit; Zinc Coated
FEDSPEC W-C-1094A	Conduit and Conduit Fittings, Plastic, Rigid
JIC EMP-1	Electrical Standards for Mass Production Equipment
NEMA ICS 6	Industrial Control and Systems Enclosures
NEMA TC2	Electrical Plastic Tubing (EPT) and Conduit (EPC 40 and EPC 80)
NEMA TC6	PVC and ABS Plastic Utilities Duct for Underground Installation
NEMA VE1	Cable Tray Systems
NEMA 250	Enclosures for Electrical Equipment (1000 volts maximum)
NFPA 70	National Electrical Code (NEC)
NFPA 79	Electrical Standards for Industrial Machinery
UBC	Uniform Building Code
UL 1	Flexible Metal Electrical Conduit
UL 6	Rigid Metal Electrical Conduit
UL 360	Liquid Tight Flexible Electrical Conduit
UL 514	Nonmetallic Outlet Boxes, Flush-Device Boxes and Covers

Reference	Title
UL 651	Rigid Nonmetal Electrical Conduit
UL 797	Electrical Metallic Tubing
UL 870	Wireways, Auxiliary Gutters, and Associated Fittings
UL 884	Underfloor Raceways and Fittings
UL 886	Outlet Boxes and Fittings for Hazardous (Classified) Locations

1.03 SUBMITTALS

The following information shall be provided in accordance with Section 01300:

1. A copy of this specification section, with addendum updates included, and all referenced and applicable sections, with addendum updates included, with each paragraph check-marked to indicate specification compliance or marked to indicate requested deviations from specification requirements.

   A check mark shall denote full compliance with a paragraph as a whole. If deviations from the specifications are indicated, and therefore requested by the Contractor, each deviation shall be underlined and denoted by a number in the margin to the right of the identified paragraph, referenced to a detailed written explanation of the reasons for requesting the deviation.

   Arizona Water Company Project Manager shall be the final authority for determining acceptability of requested deviations. The remaining portions of the paragraph not underlined will signify compliance on the part of the Contractor with the specifications.

   Failure to include a copy of the marked-up specification sections, along with justification(s) for any requested deviations to the specification requirements, with the submittal shall be sufficient cause for rejection of the entire submittal with no further consideration.

2. Manufacturer's descriptive literature for materials.

3. Certification that Contractor has been trained to work on PVC-coated conduit systems.

PART 2--PRODUCTS

2.01 RACEWAYS AND FITTINGS

General requirements for raceway materials specified in this section are listed at the end of this section. The type of raceways and raceway fittings to be used for any given area and application shall conform to the requirements in this section.

2.02 BOXES, GUTTERS, TERMINAL CABINETS, MANHOLES, AND HANDHOLES

Provide Type 316L (low carbon), 317, or Type 316 stainless products where specified. Enclosure constructed of mild sheet steel shall be hot-dipped galvanized after fabrication. Hinges shall be continuous type and for NEMA-4X cabinets hinges shall be stainless steel.

Table A specifies the electrical enclosure material and rating for the location and application.

Table A

Location	Electrical Enclosure Material and NEMA Rating
Indoor: Architecturally Finished Area	NEMA 1: mild steel
Indoor: Electrical Room	NEMA 1: mild steel
Indoor: Process Areas	NEMA 4X: Stainless Steel
Indoor: Corrosive Area	NEMA 4X: Stainless Steel
Outdoor: Corrosive Area	NEMA 4X: Stainless Steel
Outdoor: Non-Corrosive Areas	NEMA 4X: Stainless Steel
Corrosive Area (Hypochlorite)	NEMA 4X: Fiberglass
Corrosive Area (Polymer)	NEMA 4X: Stainless Steel
Hazardous Area: Class I Division 2	NEMA 4X: Stainless Steel
Hazardous Area: Class I Division 1	NEMA 7: Galvanized Malleable Iron or Aluminum

A. PULL BOXES AND WIRING GUTTERS:

Indoor boxes and enclosures larger than FD boxes shall be constructed of sheet steel and galvanized after fabrication. Outdoor boxes and enclosures shall be provided with neoprene gaskets on the hinged doors or removable covers. Box and gutter sizes, metal thickness, and grounding shall comply with the National Electrical Code. Bolt-on junction box covers 3 feet square or larger, or heavier than 25 pounds, shall have a rigid handle. Covers larger than 3 x 4 feet shall be split.

B. TERMINAL CABINETS:

Terminal cabinets shall be provided with adjustable terminal strip mounting, back-panels for equipment mounting, print pockets in the doors, continuous door hinges, and three-point lockable latches. Terminal cabinets located indoors shall be NEMA 12. Terminal cabinets located outdoors and in corrosive areas shall be modified NEMA 4X with stainless steel door hinge, three-point latch, and filtered ventilation, if required. Terminal block shall conform to Section 26 00 00.

C. MANHOLES:

Unless otherwise specified, manholes shall be precast concrete, 3000 psi strength at 28 days, with reinforcing with the manhole cover designed for H 20 bridge loading. Necking and shaft shall have 36 inch minimum clear opening.

Manhole dimensions shall be as shown on the drawings and where not shown shall be sized in accordance with the NEC. Manhole cover and frame shall be Class 30B gray cast iron per ASTM A48 with machine finished flat bearing surfaces. Manhole covers shall be engraved "ELECTRICAL".

Manholes shall be watertight. Exterior walls of manholes shall be provided with 6 mils of waterproof membrane, Sonneborn HLM 5000 Series, or equal. Manhole walls shall be provided with boxouts with waterstops on all sides of each boxout. Waterstops shall be as specified in the Cast-in-Place Concrete section.

Raceway duct entries shall be no less than 14 inches above floor and below ceiling. Raceway boxouts shall be sized to accommodate the penetrating underground duct banks. Raceways bell-ends shall be flush with the interior finished manhole wall. From each duct bank entry into the manhole, the continuous duct bank bare copper grounding conductor shall be supported and routed around the interior manhole walls and bonded together.

Floor shall slope to a sump pit with dimensions shown in the manhole detail or with a minimum of 18 inch length x 18 inch width x 12 inches depth.

D. HANDHOLES:

Handholes shall be precast concrete with checker plate, galvanized, traffic covers designed for H 20 loading. Handholes shall be provided with precast solid concrete slab bottoms with sumps. Handholes shall be constructed of 3000 psi reinforced concrete. Handhole cover shall be engraved "ELECTRICAL" or "SIGNAL" as applicable.

Dimensions shall be as specified on the drawings. Handhole walls shall be provided with boxouts, as specified for manholes.

E. MANHOLE AND HANDHOLE CABLE SUPPORTS:

Provide heavy-duty, non-metal cable racks for support of conductors. Racks shall be UL listed glass-reinforced nylon consisting of slotted wall brackets for support arms designed for a minimum of a 400-pound load. Each support bracket shall from the top to the bottom and the arms shall be adjustable and installed on 24-inch centers. Use ½-inch stainless steel bolts, hardware, inserts, and fasteners. Cables supports, clamps or racks shall be provided to support the cable at minimum 2 foot intervals. Concr
ete inserts shall be embedded on 24-inch centers in walls and ceiling.

Cable Support Products or equal:

1. Underground Devices Incorporated Type RA arms with CR36 support brackets.

2. Unistrut Power-Rack F20N-STA33 Stanchions with F20N-ARM14 Arms.

F. GROUND BUS:

Provide a ground bus in concrete manholes, handholes, and electrical pullboxes with dimension of 3-foot width x 3-foot length x 3-foot depth and larger. Provide a NEMA threaded 4-hole grounding plate for connecting two to four-1-hole ground connectors that enter the enclosure from two to four duct banks. Products: Burndy, T&B, or equal.

2.03 RACEWAY SUPPORTS

A. CONDUIT SUPPORTS:

Framing channel with end caps and straps shall be provided to support groups of conduit. Individual conduit supports shall be one-hole pipe straps used with clamp backs and nesting backs where required. Material as specified herein.

Conduit supports for PVC coated rigid steel and PVC conduit systems shall be one-hole PVC coated rigid steel clamps or oversized stainless steel clamps.

B. CEILING HANGERS:

Ceiling hangers shall be adjustable steel rod hangers and fittings. Provide J-Type conduit support for single conduit. Straps or hangers of plumber's perforated tape are not acceptable. Unless otherwise shown, hanger rods shall meet ASTM A193 and be sized as 3/8-inch up to 2-inch conduit and shall be 1/2 inch all-thread rod over 2-inch conduit. Material as specified herein.

C. SUSPENDED RACEWAY SUPPORTS AND RACKS:

Suspended raceway supports shall consist of concrete inserts, steel rod hangers, and jamb nuts supporting framing channel or lay-in pipe hangers as required. Framing channel shall be a minimum of 12-gauge. Material as specified herein.

Hanger rods shall be 1/2-inch diameter all-thread rod and shall meet ASTM A193. Suspended raceway supports and racks shall be braced for seismic forces as specified in Section 26 00 00.

D. MATERIALS:

Table B specifies the type of raceway supports required for each location and application.

Table B

Location	Framing Channel	Threaded Rod, Hardware, & Fittings
Indoor, Architecturally finished	Steel, HDG	Steel, HDG

Area		
Indoor, Electrical Room	Steel, HDG	Steel, HDG
Indoor, Process Areas	Steel, HDG	Steel, HDG
Corrosive Area (hypochlorite area)	Fiberglass PVC Ccoated Steel	Fiberglass Stainless Steel, PVC
Corrosive Area (polymer area)	Stainless Steel PVC Ccoated Steel	Stainless Steel Stainless Steel, PVC
Indoor, Corrosive Area (general)	Stainless Steel	Stainless Steel
Outdoor, Corrosive Area (general)	Stainless Steel	Stainless Steel

HDG = Hot Dip Galvanized Finish
PVC = PVC COATED

2.04 CONCRETE ENCASED DUCT BANKS

Concrete used for duct banks shall be Class E with red color added and a minimum 28-day compressive strength of 2,000 psi as specified.

2.05 UNDERGROUND MARKING TAPE

Underground detectable marking tape shall be for early warning protection of digging around direct buried cables, conduits, and concrete duct banks. Tape shall be OSHA approved.

Marking tape example: Low density polyethylene plastic, nominally 3 to 6 inches wide and 4 mil thickness with metallic lined tape with red polyethylene film on top and clear polyethylene film on the bottom. Tape shall be imprinted with a warning continuously along the length similar to: "CAUTION - STOP DIGGING - BURIED ELECTRIC LINE BELOW."

Tape Products: Brady "Identoline"; Services and Materials "Buried Underground Tape"; Somerset (Thomas & Betts) "Protect-A-Line"; or equal.

2.06 NAMEPLATES

Nameplates shall be provided for boxes in accordance with the requirements of Section 26 00 00. Nameplate wording shall be as shown on the drawings. Provide the functional description of the device on the nameplate, where wording is not specified

2.07 FIRESTOPS

Firestops and seals shall be Flamemastic 77, Vimasco No. 1-A, or equal, and shall be applied in accordance with manufacturer's recommendations. Products which are affected by water are not acceptable.

2.08 RACEWAY IDENTIFICATION

Raceway number tags shall conform to the requirements of raceway markers, Section 26 00 00.

2.09 ELECTRICAL SEALANT

Electrical sealant putty shall be non-hardening, non-oxidizing, non-corrosive, non-poisonous, and non-injurious to human skin with service temperature range of 30 to 200 degrees Fahrenheit. Product shall be used to seal against the entrance of water.

2.10 HAZARDOUS AREA AND CORROSIVE AREA CONDUIT SEALS

Sealing compound shall be non-hardening type for corrosive areas. Seal fittings for conduit systems in hazardous atmosphere locations shall be hot-dip galvanized cast ferrous alloy or aluminum alloy. Seal fittings shall be 40-percent fill type.

Sealing compound shall be hard type installed in UL listed for explosion-proof sealing fittings after the conductors are installed, tested, and accepted.

Provide PVC-coated seal fittings used for PVC-coated conduit with 40-mil factory coating. Seal fitting and sealing compound manufacture: Appleton, Crouse-Hinds, or equal.

2.11 PULLING LINE

Pulling line shall be polyethylene type, mildew and rot resistant with minimum of 200-pound tensile strength and minimum 1/4-inch diameter. Install in all “future” raceways. Manufacture: Greenlee, Ideal, or equal.

2.12 CONDUIT THREAD LUBRICANT

Thread lubricant shall be conductive with anti-seize and anti-corrosion properties, compatible with steel and aluminum conduit materials. Manufacture: T&B CP8 KOPR-Shield; Robroy Threadcompound; or equal.

PART 3--EXECUTION

3.01 GENERAL

Table C specifies the type of raceway required for each location and application by RACESPEC sheet. Unscheduled conduit shall be galvanized, rigid steel, RACESPEC type GRS.

Table C

Location	Application/Condition	RACESPEC
Indoor noncorrosive	Exposed	GRS

Indoor corrosive	Exposed	PGRS
Outdoor	Exposed	PGRS
Concealed	Circuits embedded in concrete structure or beneath slab-on-grade	PVC4
Underground	Circuits encased in concrete, duct bank	PVC4
Nonhazardous	Final connection to equipment and light fixtures	LFS
Hazardous corrosive	Exposed	PGRS
Hazardous	Final connection to equipment	XPFS
Architecturally finished areas	Concealed in framed walls and ceiling spaces (lighting and receptacle circuits only)	EMT
Architecturally finished areas	Final connection to light fixtures	FLEX

3.02 CONDUIT

A. GENERAL:

The conduit systems, installation, and hazardous location fittings are specified herein.

B. INDOOR AND OUTDOOR CONDUIT SYSTEMS:

In general, Contractor shall be responsible for determining conduit routing that conforms to the specified installation requirements and ANC standards or:

1. Conduits for lighting and outlets: concealed / exposed
2. Conduits for process equipment: concealed / exposed
3. Conduit inside structures: concealed / exposed
4. Conduit concealed inside water chambers slabs and walls

Conduit installation shall conform to the requirements specified and the following installation requirements:

1. Exposed conduit: Install parallel or perpendicular to structural members and surfaces. Install conduit horizontally and allow minimum headroom of 7 feet.

2. Route two or more exposed conduits in the same general routing parallel with symmetrical bends.

3. Space exposed conduit installed on supports not more than 10 feet apart. Space multiple conduits in parallel and use framing channel.

4. Comply with the requirements of Section 26 00 00 and herein, where conduits are suspended from the ceiling.

5. Secure conduit rack supports to concrete walls and ceilings with cast-in-place anchors or framing channel concrete inserts.

6. Install conduits at least 6 inches from high temperature piping, ducts, and flues with temperatures higher than 90 degree C.

7. Install conduits between the reinforcing steel in walls or slabs that have reinforcing in both faces.

8. Place conduits under the reinforcement in slabs with only a single layer of reinforcing steel. Separation between conduits, conduits and reinforcement, and conduits and surfaces of concrete shall be maintained in accordance with UBC.

9. Route conduit clear of structural openings and indicated future openings.

10. Provide conduits with flashed and watertight seals routed through roofs or metal walls.

11. Grout conduits into openings cut into concrete and masonry structures.

12. Cap conduits or plug flush conduits during construction to prevent entrance of dirt, trash, and water. Cap or plug empty conduits designated as “future”, “spare”, or “empty” and include a pulling line accessible at both ends. Use anti-seize compound on cap and plug threads prior to installation.

13. Determine concealed conduit stubup locations from the manufacturer's shop drawings. Terminate concealed conduit for future use in specified equipment.

14. Install conduit flush with structural surfaces with galvanized couplings and plugs. Caps and plugs shall match the conduit system.

15. Provide concealed portions of conduits for future equipment where the drawings indicate future equipment. Match the existing installation for duplicate equipment.

16. Terminate conduits that enter enclosures with fittings that match the NEMA rating of the enclosure.

17. Underground metallic or nonmetallic conduit that turn out of concrete, masonry or earth: Install a 90-degree elbow of PVC-coated rigid steel conduit before emergence above ground.

18. Provide O-Z Gedney "Type DX" or Crouse-Hinds "Type XD" bonded, weathertight expansion and deflection fitting for the conduit size where conduit across structural joints that allows structural movement.

C. UNDERGROUND CONDUIT SYSTEM:

Excavation, backfilling, and concrete work shall conform to respective sections of these specifications. Underground conduit shall conform to the following requirements:

1. Underground conduits shall be reinforced concrete encased that are not shown otherwise on the drawings.

2. Concrete encased conduit shall have minimum concrete thicknesses of 2 inches between conduits, 1 inch between conduit and reinforcing, and 3 inches between reinforcing and earth, unless shown otherwise in an electrical detail.

3. Concrete encasement on exposed outdoor conduit risers shall continue to 3 inches above grade, with top crowned and edges chamfered.

4. Underground conduit bend radius shall be not less than 2 feet minimum at vertical risers and shall be not less than 3 feet elsewhere.

5. Where conduit and concrete encasement are terminated underground, the conduit and reinforcing shall both extend at least 2 feet past the concrete. Conduits shall be capped and threads protected. Steel surfaces shall be given two coats of epoxy paint.

6. Underground conduits and conduit banks shall have 2 feet minimum earth cover unless otherwise shown.

7. Underground conduit banks through building walls shall be cast-in-place or installed with concrete into boxouts with waterstops on all sides of the boxout. Water-stops shall be as specified in the Cast-in-Place Concrete section. Extend the horizontal reinforcement from the duct bank into the boxout terminating with J-hook bends.

8. Conduits not encased in concrete and passing through walls with one side in contact with earth shall be sealed watertight with special rubber gasketed sleeve and joint assemblies or with sleeves and modular rubber sealing elements.

9. Thoroughly swab conduits and raceways on the inside, immediately upon completion of pouring concrete.

10. Label raceways in accordance with Section 26 00 00.

11. After the concrete has set and before backfilling, pull a mandrel through each conduit. The mandrel shall have a diameter equal to the nominal conduit inside diameter minus 1/2 inch and shall not be less than 4 inches long.

12. If the mandrel showed signs of protrusions on the inside of the conduit, the conduit shall be repaired or replaced.

13. Provide manufactured plastic conduit spacers anchored to prevent movement during the concrete pour. Manufacture: Carlon, PW Pipe, Underground Devices, or equal.

14. Form the concrete pour ten feet from the wall, manhole, or handhole and form to allow for future conduit entry.

15. Backfill duct banks with clean fill compacted to 90-percent in 6-inch lifts after concrete has cured. Refer to Section 03300 for concrete requirements including minimum 7 days of cure time prior to backfill over duct banks.

16. Allow and provide for two offsets per conduit and raceway for each 100- linear feet to account for unexpected field conditions including for excavation and backfill limited to three feet of extra width and/or depth. Include these specified provisions in the bid price.

17. Provide PVC threaded adapter with female threads where PVC conduit is joined to steel conduit. Procedure:

    a. Before assembly: Double coat steel conduit with Red-Robroy, Green-Permacote, Blue-Ocal or equal product.

    b. After assembly: Seal with 65-mil thick, 2-inch wide mastic sealing tape to ½-inch beyond threads. Procucts: 3M Scotch 2228; Plymouth 02625; or equal.

    c. Cover with 20-mil corrosion protection tape applied in ½-lap layers to 2-inch beyond threads. Products: 3M Scotchwrap 51; Plymouth Plywrap 12; or equal.

18. Where reinforced concrete duct banks enter the side of a building, manhole, or handhole and the reinforcement cannot be brought into a window and be terminated, then drill the structure and embed the reinforcement in epoxy to minimum of 3-inches depth.

19. Provide PVC conduit with bell ends where duct banks terminated at walls, manholes, or handholes. Install bell ends flush with finished concrete.

20. Provide rigid steel for 90 degree bends up to all equipment, where conduit rise below grade into a floor mounted electrical panel, electrical cabinet, MCC, switchboard, or switchgear.

21. Separate power conduits from signal conduit within the same ductbank by 12” or greater separation, as shown. Refer to the drawings or schedules for signal to be installed in metal conduits instead of PVC ducts.

22. Separate high voltage ductbanks from low voltage ductbanks, as shown.

23. Provide wireways for transition from underslab conduits rising into wall-mounted panels where the number of conduits exceed the NEC allowable panel space in the bottom of the panel. Provide conduit sleeves or fitting for panel transition. Continous thread or all-thread is prohibited.

D. CONDUIT SEAL-OFF FITTINGS:

Conduits passing:

1. Between Class I, Division 1 area and Class I, Division 2 area; provided with sealing fittings located at the boundary in accordance with NEC Article-500.

2. From hazardous or corrosive area into a non-hazardous or non-corrosive area.

Install the seal-off material in the couduit seal-off fittings after inspection.

3.03 MANHOLES AND HANDHOLES

Unless otherwise specified, manhole and handhole installation shall be as follows:

1. Manholes, handholes, and pull boxes shall be set on a minimum of 6 inches of crushed rock on top of undisturbed or compacted earth.

2. Manholes and handholes shall be set plumb so that water shall drain to the sump.

3. Manhole covers shall be 36-inches in diameter and set at 2 inches above finish grade with surrounding pavement sloping away from the manhole cover.

4. Metallic hardware inside manholes and handholes shall be bonded to the ground plate or ground bus using bolted connections, bonding jumpers and grounding bushings.

3.04 RACEWAY NUMBERING

Each new and reused conduit shall be provided with a number tag at each end and in each manhole, handhole, or pull box. Cable trays shall be identified by stencils at intervals not exceeding 50 feet, at intersections, and at each end to identify power cable tray voltage, control cable tray, or instrument cable tray.

3.05 RACEWAYS

A. UNSCHEDULED RACEWAY:

Unscheduled lighting and receptacle raceways shall be sized by the Contractor in accordance with the NEC. Minimum size shall be 3/4 inch for exposed and 1 inch for embedded raceway.

The number and size of communication, paging, fire alarm, and security raceways shall be as required for the particular equipment provided subject to the minimum sizes specified herein.

B. SCHEDULED RACEWAY:

The size and type of raceway shall be as specified on the drawings.

3.07 RACEWAY SPECIFICATIONS

The following raceway types are included in this section:

3.07 RACEWAY SPECIFICATION SHEETS

Raceway Identification:	FLEX
Description:	Flexible Steel Conduit
Application:	Final connection to equipment subject to vibration or adjustment.
Compliance:	UL 1
Construction:	Spirally wound galvanized steel strip with successive convolutions securely interlocked.
Minimum size:	1/2 inch
Fittings:	Compression type
Other:	FLEX shall be provided with an internal ground wire.

3.07 RACEWAY SPECIFICATION

Raceway Identification:	GRS
Description:	Galvanized Rigid Steel Conduit (GRS)
Compliance:	ANSI and UL
Finish:	Hot-dip galvanized after fabrication, inside and outside. Smooth finished surfaces.
Manufacturers:	Allied Tube and Conduit Corp., Wheatland Tube Co., or equal.

Minimum size:	Unless otherwise specified, 3/4 inch for exposed, 1 inch for embedded, encased, or otherwise inaccessible.
Fittings:	
Locknuts, Rings, Hubs:	Hot-dip galvanized insulated throat with bonding locknut or ring,. The hubs shall utilize a neoprene "O" ring and provide a watertight connection. O-Z Gedney, CHM-XXT, or equal
Unions:	Electro-galvanized ferrous alloy type Appleton UNF or UNY, Crouse-Hinds UNF or UNY, or equal. Threadless fittings are not acceptable.
Conduit Bodies:	Oversized conduit bodies: Ferrous alloy type with screw taps for fastening covers to match the conduit system. Gaskets shall be made of neoprene.
Boxes:	
Indoor:	Type FD cast ferrous for all device boxes and for junction boxes less than 6 inches square.
Outdoor:	Type FD cast ferrous for all device boxes and for junction boxes less than 6 inches square.

3.07 RACEWAY SPECIFICATION

Raceway Identification:	GRS (continued)
Corrosive:	NEMA 4X stainless steel or nonmetallic, as specified.
Hazardous:	NEMA Class 7 cast ferrous.
Elbows:	
(3/4" thru 1-1/2")	Factory fabricated or field bent.
(2" thru 6")	Factory fabricated only.
Conduit Bodies (Oversized):	
(3/4" thru 4")	Malleable iron, hot-dip galvanized, unless otherwise noted. Neoprene gaskets for all access plates. Tapered threads for conduit entrances.
(5" and 6")	Electro-galvanized iron or cast iron box.
Expansion Fittings:	Expansion fittings in embedded runs shall be watertight with an internal bonding jumper. The expansion material shall be neoprene allowing for 3/4-inch movement in any direction.

Manufacturers: Appleton, Crouse-Hinds, Hubbell, O. Z. Gedney, or equal.

Installation: Rigid steel conduit shall be made up tight and with conductive thread compound. Joints shall be made with standard couplings or threaded unions. Steel conduit shall be supported away from the structures using hot-dip galvanized malleable iron straps with nesting backs or framing channel.

Conduit entering boxes shall be terminated with a threaded hub with a grounding bushing.

Exposed male threads on rigid steel conduit shall be coated with zinc-rich paint.

3.07 RACEWAY SPECIFICATION

Raceway Identification:	LFS
Description:	Liquidtight Flexible Steel Conduit
Application:	Final connection to equipment subject to vibration or adjustment.
Compliance:	UL 360
Construction:	Spirally wound galvanized steel strip with successive convolutions securely interlocked and jacketed with liquidtight plastic cover.
Minimum size:	3/4 inch
Fittings:	Cadmium-plated malleable iron body and gland nut with cast-in lug, brass grounding ferrule threaded to engage conduit spiral. O-ring seals around the conduit and box connection and insulated throat. Provide forty-five and ninety degree fittings where applicable. Provide PVC coated flexible conduit and fittings where the conduit system is PVC coated.
Installation:	Length of flexible liquidtight conduit shall not exceed 15 times the trade diameter of the conduit and not exceed 36 inches in length. Use conductive thread compound.

3.07 RACEWAY SPECIFICATION

Raceway Identification:	PGRS
Description:	Rigid Steel Conduit, Corrosion-Resistant, Polyvinyl Chloride (PVC) Coated. Provide factory made and coated elbows.
Compliance:	ANSI, ETL and UL. The PVC coated rigid galvanized steel conduit shall be stamped with the ETL Verification Mark “ETL Verified to PVC-001”.

Finish: PGRS shall be hot-dip galvanized rigid steel conduit as specified in 26 01 10-3.03 GRS, with a PVC Coating. The PVC coating shall be gray, minimum 40 mils thick, bonded to the outside and continuous over the entire length of the conduit except at the threads, and be free of blisters, bubbles, or pinholes. Thread protectors shall be used on the exposed threads of the PVC coated conduit.

A 2-mil coat of urethane enamel coating shall be bonded to the inside. Coating shall be free of pinholes. Bond strength shall exceed the tensile strength of the PVC coat.

Minimum size: 3/4 inch

Fittings: Similarly coated to the same thickness as the conduit and provided with Type 316 stainless steel hardware. Conduit and fittings shall be manufactured by the same company Conduit and fittings shall be coated by the same company. Male threads on elbows and nipples, and female threads on fittings or conduit couplings shall be protected by application of urethane coating.

Covers: PVC coated covers shall have V-groove seal and stainless steel hardware.

Hubs: Hubs for connection of conduit to junction, device, or terminal boxes shall be threaded cast ferrous alloy.
Hubs shall have the same PVC coating as the conduit and insulating grounding bushings. Hubs shall utilize a neoprene "O" ring and shall provide a watertight connection.

3.07 RACEWAY SPECIFICATION

Raceway Identification:	PGRS (continued)
Boxes:	
Nonhazardous:	NEMA Class 4X stainless steel or nonmetallic.
Hazardous:	NEMA Class 7 cast ferrous.
Manufacturers:	PVC coated conduit that bears the ETL Verified PVC-001 label by Robroy Industries, Plasti-Bond, Perma-Cote, KorKap or equal.
Installation:	Plastic coated conduit shall be made up tight, threaded, and installed using tools approved by the PVC-coated conduit manufacturer. Exposed conduit threads shall be covered by a plastic overlap coated and sealed per manufacturer's recommendations. Pipe wrenches and channel locks shall not be used for tightening plastic coated conduits. Damaged areas shall be patched, using manufacturer's recommended material. The area to be patched shall be built up to the full thickness of the coating. Painted fittings are not acceptable. PVC coated conduit shall be supported away from the structure using PVC coated conduit wall hangers or PVC coated conduit mounting hardware. Damaged work shall be replaced
Training:	Installers shall be trained and certified in the proper installation techniques provided by the PVC-coated conduit system manufacture. Proof of certification shall be provided under paragraph 26 01 10-1.03.

3.07 RACEWAY SPECIFICATION

Raceway Identification:	PVC Schedule 40
Description:	Rigid Nonmetallic Conduit.
Application:	Heavy wall thickness for direct bury, concrete encasement or surface mounting where not subject to physical damage.
Compliance:	NEMA TC2, UL 651
Construction:	Schedule 40, high-impact, polyvinylchloride (PVC)
Minimum size:	3/4 inch exposed; 1 inch embedded or encased
Fittings:	PVC solvent weld type
Boxes:	
Indoor:	NEMA Class 4, nonmetallic
Outdoor and corrosive:	NEMA Class 4X, nonmetallic
Installation:	PVC conduit entering fiberglass boxes or cabinets shall be secured by threaded bushings on the interior of the box and shall be terminated with a threaded male terminal adapter having a neoprene O ring. Joints shall be made with standard PVC couplings. PVC conduit shall have bell ends where terminated at walls and boxes.

3.07 RACEWAY SPECIFICATION

Raceway Identification:	WW
Description:	Wireway and Auxiliary Gutter: Match the conduit or raceway system specified and shown on the drawings. Minimum: Flanged, oiltight type with hinged covers
Application:	As shown on the drawings.
Compliance:	JIC EMP-1

Sizes as shown:	4 inch by 4 inch, 6 inch by 6 inch, 8 inch by 8 inch
Finish:	Hot-dip galvanized after fabrication, inside and outside. Smooth finished surfaces.
Indoor non-corrosive area:	NEMA-1, NEMA-12, NEMA-4 or as shown on the drawings.
Outdoor and corrosive area:	NEMA-3R, NEMA-4X or as shown on the drawings.

3.07 RACEWAY SPECIFICATION

Raceway Identification:	XPFS
Description:	Explosion-proof Flexible Steel Conduit
Application:	XPFS Conduit soupling shall be used for final connections to motors and other equipment subject to vibration or adjustment in Class I Division 1 hazardous areas and shall be watertight.
Size:	1/2 inch – 4-inch

Length: 4-inch – 36-inch

END OF SECTION

SECTION 26 01 20

600 VOLT CONDUCTORS, WIRE, AND CABLE

PART 1--GENERAL

1.01 DESCRIPTION

This section specifies stranded copper cables, conductors, and wire rated 600 volts insulation used for power; lighting, analog, digital, or pulse signals and control circuits.

[This section specifies copper cables and coax cable rated 300 volt insulation used for data communication and specifies fiber optic data cable used for data communication.]

1.02 REFERENCES

This section contains references to the following documents. They are a part of this section. In case of conflict between the requirements of this section and those of the listed documents, the requirements of this section shall prevail.

Reference	Title
ASTM B3	Soft or Annealed Copper Wire
ASTM B8	Concentric-Lay-Stranded Copper Conductors, Hard, Medium-Hard, or Soft
ASTM B33	Tinned Soft or Annealed Copper Wire for Electrical Purposes

Reference	Title
ICEA S-68-516	Ethylene-Propylene-Rubber-Insulated Wire
NEMA WC7	Cross-Linked-Thermosetting Insulated Wire and Cable for the Transmission and Distribution of Electric Energy
NFPA 70	National Electric Code (NEC)
UL 44	Rubber-Insulated Wires and Cables
UL 83	Thermoplastic-Insulated Wires and Cables

1.03 SUBMITTALS

The following information shall be provided in accordance with Section 01300.

1. Submittals specified in Section 6000.
   Complete catalog cuts for all conductors, wire, and cable.

PART 2--PRODUCTS

2.01 GENERAL

A. UNSCHEDULED CONDUCTORS AND CABLES:

Where not specified on the Drawings, conductors and cables shall be sized in accordance with the National Electrical Code for the particular equipment served with the minimum size as specified herein.

Unscheduled conductor with insulation shall be provided in accordance with the following:

1. "MEPR/CPE" multi-conductor power and control cable
2. “XHHW” for single power and control conductors

3. “XHHW OR THWN” for indoor lighting and receptacles

B. CABLE SPECIFICATIONS:

General requirements for conductors and cables specified in this Section are listed in paragraph 26 01 20-3.06.

2.02 COLOR CODING

A. CONTROL CONDUCTORS:

Single-conductor control conductors shall have the following colors for the indicated voltage:

Control Conductor	120V
Power (AC)	A-Phase Black, B-Phase Blue
Control (AC)	Red
Neutral	White
Ground	Green
Foreign Voltage	Orange
Power (24VDC)	Blue / Blue-White
Control (24VDC)	

B. POWER CONDUCTORS:

Power conductors shall have the following colors for the indicated voltage:

Power Conductor	480V	208/120V
Phase A	Brown	Black
Phase B	Orange	Red
Phase C	Yellow	Blue
Ground	Green	Green
Neutral	Gray	White

Cables may be black with colored 3/4-inch vinyl plastic tape applied at each cable termination. Tape shall be wrapped with 25 percent overlay to provide 3 inches minimum coverage.

C. SIGNAL CONDUCTORS:

Signal cable conductors shall be color coded black and white for pairs or black, white, and red for triads. Each conductor and each group of conductors shall be numbered.

2.03 POWER AND CONTROL CONDUCTORS AND CABLE, 600 VOLT

A. SINGLE CONDUCTOR:

Provide stranded conductors for all cable or wires. Provide minimum conductor size of 12 AWG for power and lighting circuits and minimum conductor size of 14 AWG for control circuits.

B. MULTICONDUCTOR CABLE:

Provide multiconductor power cable and multiconductor control cable where identified on the drawings. Provide stranded conductors for all cable or wires.

2.04 SIGNAL CABLES

A. GENERAL:

Factory cable between manufactured instrument system components shall be provided in compliance with the instrument manufacturer's recommendations.

Signal cable shall be provided for instrument signal transmission. Single instrument cable and multiple-circuit instrument cable shall be provided in accordance with the following examples:

Cable designation: 1PR#16S shielded twisted pair
Cable designation: 1TR#16S shielded twisted triad

Cable designation example: 4PR#16S with individual shields for each of the four pair and an overall shield and jacket for the multiconductor instrument cable.

B. COMMUNICATION, PAGING, AND SECURITY SYSTEM CABLES:

Voice communication, paging, and security system cables shall be specified in their respective specification sections.

2.05 PORTABLE CORD

Portable cord shall be provided an equipment grounding conductor.

2.06 SPLICING AND TERMINATING MATERIALS

Connectors shall be tool applied compression type of correct size and UL listed for the specific application. Connectors shall be tin-plated high conductivity copper. Wire nuts for a splice is prohibited.

Signal and control conductors shall be connected to terminal blocks and field devices and instruments shall be terminated with conductor terminals as specified in paragraph 26 00 00-2.02.

Connectors for wire sizes No. 8 AWG and larger shall be compression tool installed one-hole lugs up to size No. 3/0 AWG, and two-hole or four-hole lugs for size No. 4/0 and larger. Mechanical clamp, dimple, screw-type connectors are not acceptable. In-line splices and taps shall be used only by written consent of the Construction Manager, Arizona Water Company.

Power conductor splices shall be compression type, made with a compression tool die approved for the purpose, as made by Thomas and Betts Corp., or equal. Splices shall be covered with electrical products designed for the application, insulated, and covered with a heat-shrinkable sleeve or boot, as specified elsewhere.

Motor connection kits shall consist of heat-shrinkable, polymeric insulating material over the connection area and high dielectric strength mastic to seal the ends against ingress of moisture and contamination. Motor connections may use the Tyco Electronics removable boot product line.

Motor connection kits shall accommodate a range of cable sizes for both in-line and stub-type configurations. Connection kits shall be independent of cable manufacturer's tolerances.

2.07 CORD GRIPS

Cord grips shall be provided where indicated on the Drawings to attach flexible cord to equipment enclosures. Cord grips shall consist of a threaded aluminum body and compression nut with a neoprene bushing and stainless steel wire mesh for strain relief. Cord grip shall provide a watertight seal at enclosure interface and sized to accommodate the flexible cord.

PART 3--EXECUTION

3.01 GENERAL

Conductors shall be identified at each connection terminal and at splice points. The identification marking system shall comply with Section 26 00 00.

Pulling wire and cable into conduit or trays shall be completed without damaging or putting undue stress on the insulation or jacket. Manufacture recommended and UL Listed pulling compounds are acceptable lubricants for pulling wire and cable. Grease is not acceptable.

Raceway construction shall be complete, cleaned, and protected from the weather before cable is installed. Where wire or cable exits a raceway, a wire or cable support shall be provided.

Provide tin-plated bus bar. Scratch-brush the contact areas and tin plate the connection where flat bus bar connections are made with un-plated bar. Bolts shall be torqued to the bus manufacturer's recommendations.

3.02 600 VOLT CONDUCTOR AND CABLE

Conductors in panels and electrical equipment shall be bundled and laced at intervals not greater than 6 inches, spread into trees and connected to their respective terminals. Lacing shall be made up with plastic cable ties. Cable ties shall be tensioned and cut off by using a tool specifically designed for the purpose such as a Panduit GS2B. Other methods of cutting cable ties are unacceptable.

Conductors crossing hinges shall be bundled into groups not exceeding 10 to 15 conductors and protected using nylon spiral flexible covers to protect conductors. Provide oversized plastic panel wiring duct within panels and panelboards.

Slack shall be provided in junction and pull boxes, handholes and manholes. Slack shall be sufficient to allow cables or conductors to be routed along the walls. Amount of slack shall be equal to largest dimension of the enclosure. Provide dedicated electrical wireways and insulated cable holders mounted on unistrut in manholes and handholes.

Raceway fill limitations shall be as defined by NEC and the following:

1. Lighting and receptacle circuits may be in the same conduit in accordance with de-rating requirements of the NEC. Lighting and receptacle circuits shall not be in conduits with power or control conductors. Signal conductors shall be in separate conduits from power conductors. Motor feeder circuits shall be in separate conduits including small fan circuit unless combination fan-light fixture.

2. Power conductors derived from uninterruptible power supply systems shall not be installed in raceways with conductors of other systems. Install in separate raceways.

3. Slices and terminations are subject to inspection prior to and after insulating.

4. Motor terminations at 460-volt motors shall be made by bolt-connecting the lugged connectors.

5. In-line splices and tees, where approved, shall be made with tubular compression connectors and insulated as specified for motor terminations. Splices and tees in underground handholes or pull boxes shall be insulated using Scotch-cast epoxy resin or Raychem splicing kits.

6. Terminations at solenoid valves, 120 volt motors, and other devices furnished with pigtail leads shall be made using self-insulating tubular compression connectors within the termination box.

7. Terminations at valve and gate motor actuators shall be made directly into the actuator where possible. Power termination shall be made in the actuator power disconnect. Control and signal cable may be routed to a termination box near the actuator on 20-ampere rated terminal strips with label identification for the control and signal conductors. Single wire control conductors and analog cable

(SIC or MIC) then installed in flexible conduit to the actuator control and signal termination compartments.

3.03 SIGNAL CABLE

Provide terminal blocks at instrument cable junctions within dedicated terminal boxes provided by the installer. Signal circuits shall be run without splices between instruments, terminal boxes, or panels.

Circuits shall not be made using conductors from different pairs or triads. Triads shall be used wherever 3-wire circuits are required.

Shields are not acceptable as a signal path, except for circuits operating at radio frequencies utilizing coaxial cables. Common ground return conductors for two or more circuits are not acceptable.

Shields shall be bonded to the signal ground bus at the control panel only and isolated from ground at the field instrument or analyzer and at other locations. Shields or drain wires for spare circuits shall not be grounded at either end of the cable run. Terminals shall be provided for running signal leads and shield drain wires through junction boxes.

Spare circuits and the shield drain wire shall be terminated on terminal blocks at both ends of the cable run and be electrically continuous through terminal boxes.

Where instrument cable splicing is required, provide an instrument stand with terminal box rated for the area and environment and mounted approximately 3 feet above grade for instrument cable splices with the circuits and individual conductors provided with label as specified in Section 26 00 00.

Cable for paging, security, voice communication, and telephone systems shall be installed and terminated in compliance with the manufacturers and the Utilities recommendations.

3.04 PORTABLE CORD

Portable power cords feeding permanent equipment, such as pendant cords feeding motors for pumps, cranes, hoists, and portable items shall have a wire mesh cord grip of flexible stainless steel wire to relieve the tension from the cable termination. Connection of portable cords to permanent wiring shall be accomplished with dedicated boxes and terminals blocks.

3.05 TESTING

The Contractor shall test conductors, wire, and cable in accordance with Section 26 00 30.

3.06 CABLE SPECIFICATIONS

The following are included in this section:

Cable System Identification:	DC1 (Data Cable-1)
Description:	Premise Cable: IEC Category 5 UTP; NEMA WC-63.1 Category 5e; Fast Ethernet: 100 Base TX; 4 pair, #24 AWG Cable
Voltage:	300 V RMS
Conductor Material:	Solid Bare copper
Insulation Material:	FRPO - Flame Retardant Polyolefin / FEP - Fluorinated Ethylene Propylene; Color Coded conductor insulation
Jacket:	LS PVC - Low Smoke Polyvinyl Chloride with ripcord Trade Name Example: Flamarrest Sequential Footage Marking: every two feet Jacket Color: [Red] [Yellow] [Black] [Blue]
Manufacturer(s):	Cooper Industries – Belden 1585A; or equal.
Execution:	
Applications:	Gigabit Ethernet Data Communications LAN, CCTV Fixed. Component or Composite Video, Digital Video, RS-422,
Installation:	Install in accordance with associated equipment manufacturer's instruction.
Testing:	Test in accordance with paragraph 26 01 20-3.05.

Cable System Identification:	DC2 (Data Cable-2)
Description:	Shielded Data Communication Cable; Remote I/O Cable: RS-485 #22 or #24 AWG Copper.
Voltage:	30 V RMS
Conductor Material:	Tinned copper
Insulation:	Polyethylene; Trade Name Example: Datalene
Jacket:	PVC or CPE Color: Chrome

Manufacturer(s): Cooper Industries-Belden YM-29560 or equal

Execution:

Application: DCU or PLC to Remote I/O - Data Communications Cable.

Installation: Install in accordance with associated equipment manufacturers instruction.

Testing: Test in accordance with paragraph 26 01 20-3.05.

Cable System Identification: DC3 (Data Cable-3)

Description: Fiber Optic Data Cable;
6-Conductor:
Color Examples: 1-Blue, 2-Orange, 3-Green, 4-Brown, 5-Slate, 6-White;
Indoor/Outdoor; Heavy Duty-MFPT; Cable Tray Rated

Material: 62.5/125/250 micron

Jacket: Chlorinated Polyethylene (CPE)
Color: [Orange] [Red]

Type: NEC (UL): OFNR with industrial cable tray rating IEEE flame test rated: 802.3Z

Manufacturer(s): Cooper Industries-Belden I100666; or Engineer accepted equal

Execution:

Application: Data Communications. (Not Plenum Rated)

Installation: Install in accordance with paragraph 26 01 20-3.03 and associated equipment manufacturers instruction.

Testing: Test in accordance with paragraph 26 01 20-3.05.

Cable System Identification: Multiple Twisted Shielded Pair Cable

Description: 16 AWG, with overall shield instrumentation cable;
Number of pairs as shown; UL listed,
Cable Tray rated.

Voltage:	600 volts
Conductor Material:	Bare annealed copper; Class-B stranded per ASTM B-8
Insulation:	15 mil, Polyvinyl Chloride (PVC) with 4 mil nylon, 90 degree C temperature rated Color Code per ICEA Method-1: Pairs- Black and White with one conductor in each pair printed alpha-numerically for identification
Lay:	Twisted on a 2-inch lay
Shield:	100 percent, 1.35 mil aluminum/polyester or mylar tape with 7-strand tinned copper drain wire
Overall Shield:	2.35 mil aluminum-Mylar tape with 7-strand tinned copper drain wire
Jacket:	Flame-retardant, moisture and sunlight resistant 45 mil Polyvinyl Chloride (PVC)
Flame Resistance:	UL 1277 and UL 1581 vertical tray flame test
Manufacturer(s):	Okonite, Okoseal-N type SP-OS (Shielded Pairs with Overall Shield); or Cooper Industries-Belden equal; or General Cable equal

Execution:

Installation:	Install in accordance with paragraph 26 01 20-3.03.
Testing:	Test in accordance with paragraph 26 01 20-3.05.

Cable System Identification:	Single Twisted, Shielded Cable
Description:	Pair or Triad, 16 AWG, instrumentation and signal cable; UL listed; Cable Tray rated
Voltage:	600 volts
Conductor Material:	Bare annealed copper; stranded per ASTM B8
Insulation:	15 mil, Polyvinyl Chloride (PVC) with 4 mil nylon, 90 degree C temperature rated Color Code per ICEA Method-1: Pairs- Black and White with one conductor in each pair printed alpha-numerically for identification
Lay:	Twisted on a 2-inch lay
Shield:	100 percent, 1.35 mil aluminum-Mylar tape with a 7-strand tinned copper drain wire
Jacket:	45 mil Polyvinyl Chloride (PVC)
Flame Resistance:	UL 1277
Manufacturer(s):	Okonite, Okoseal-N Type P-OS (Pair(s) Overall Shield) and Type TOS (Triad(s) Overall Shield); or Cooper Industries-Belden equal; or General Cable equal

Execution:

Use:	Analog signal cable and RTD device Triad extension cable.
Installation:	Install in accordance with paragraph 26 01 20-3.03.
Testing:	Test in accordance with paragraph 26 01 20-3.05.

Cable System Identification:	THWN
Description:	Single conductor lighting and receptacle type; Indoor branch circuit conductor.
Voltage:	600 volts
Conductor Material:	Bare annealed copper; stranded per ASTM B8

Insulation:	THWN/THHN, 90 degree C dry, 75 degree C wet, Polyvinyl Chloride (PVC) per UL 83.
Jacket:	Nylon
Flame Resistance:	UL 83
Manufacturer(s):	Okonite, Okoseal-N, series 116-67-XXXX; or equal.
Uses Permitted:	Lighting, receptacle and appliance circuits
Execution:	
Installation:	Install in accordance with paragraph 26 01 20-3.02.
Testing:	Test in accordance with paragraph 26 00 00-3.02 and Section 26 00 30.

Cable System Identification:	XHHW
Description:	Industrial grade single conductor Sizes: 14 AWG through 750 kcmil as shown
Voltage:	600 volts
Conductor Material:	Bare annealed copper; stranded per ASTM B8
Insulation:	NEC Type XHHW-2; 90 degree C dry and C wet; Cross-Linked Polyethylene (XLP) per ICEA S-66-524 and UL-44; Color in sizes 14, 12 and 10 AWG: Black, Green, Yellow, White, Orange, Brown, Red, Blue
Jacket:	None
Flame Resistance:	UL 83
Manufacturer(s):	Okonite, X-Olene; Cablec, Durasheath XLP; or equal.
Uses Permitted:	Power, control, lighting and outlet circuits.
Execution:	
Installation:	Install in accordance with paragraph 26 01 20-3.02.
Testing:	Test in accordance with paragraph 26 00 00-3.02 and Section 26 00 30.

Cable System Identification:	MXLP / XLP
Description:	Multiconductor Power Cable and Multiconductor Control Cable: 14 AWG stranded conductors; Cable tray rated.
Power Cable:	Insulated green grounding conductor sized per the NEC.
Ground Conductor Size:	Multiple sets of multiconductor power cable: Oversize the grounding conductor per NEC 250.
Control Cable Type:	ICEA Method 1, E-2, without white neutral conductor or green ground conductor
Control Cable Identification:	Conductors color coded per ICEA and conductors numbered
Voltage:	600 volts
Conductor Material:	Bare annealed copper; stranded per ASTM B8, coated per ASTM B33
Insulation:	RHW/RHH, 90 degree C dry, 75 degree C wet, ethylene propylene rubber (EPR) per ICEA 2-68-516 and UL 44.
Jacket:	Cross-linked Polyethylene (XLP)
Flame Resistance:	IEEE 383
Manufacturer(s):	Okonite, Okonite-Okolon-Okoseal series 202-11-3XXX; Cablec, Durasheath EP; or equal.
Execution:	
Installation:	Install in accordance with paragraph 26 01 20-3.02.
Testing:	Test in accordance with paragraph 26 00 00-3.02 and Section 26 00 30.

Cable System Identification:	MXLPE / S / PVC
Description:	1000 Volt Rated - Flexible Motor Supply Shielded Cable
Power Cable:	Multi-conductor shielded motor feeder cable with PVC jacket: 3/C cable with conductors sizes from #16-AWG to #2-AWG with grounding conductor.
Ground Conductor Size:	Sized per NEC 250
Application:	Feeder cable between VFD motor controller and motor.
Conductor Material:	Flexible copper with high strand count
Insulation:	Thermoset Crosslinked Polyethylene (XLPE): 90 degree C dry, 75 degree C wet, per UL 44.
Jacket:	PVC over assembly; jacket thickness per UL 1277 Cable Tray rated UL 1277 Type TC
Shield:	Tinned copper braid and foil
Flame Resistance:	IEEE 383 Fire Test (70,000 BTU) IEEE 1202: Limited Smoke rated and labeled on cable jacket UL 1685: Vertical Tray Flame Exposure Test
Manufacturer(s):	Anixter B2095XX series Belden 295XX series LAPPUSA OLFLEX VFD Symmetrical: 1AWG - 500kcmil LAPPUSA OLFLEX Servo 2YSLCY-JB flexible cable

Execution:

Installation:	Install in accordance with paragraph 26 01 20-3.02. Install in conduit or cable tray. Not to be used for open wiring installation. Ground shields at both ends. Shield terminating gland may be used at the motor to ensure grounding the shield.
Testing:	Test in accordance with paragraph 26 01 20-3.05 and Section 26 00 30.

Cable System Identification:	CORD
Description:	Industrial Grade Flexible Portable Cord: Synthetic Rubber Insulation with Oil-Resistant Thermoset Jacket construction: Type SOOW for 600 Volt circuits; Type SJOOW for 300 Volt circuits
Voltage:	600 V RMS where shown or where unspecified: Type SOOW
Conductor Material:	Flexible rope stranded annealed copper per ASTM B189 and B33.
Insulation:	Insulation: Ethylene propylene (EPR) per ICEA S-68-516 and rated for continuous operation at 90 degrees C. Green used for ground only Color: 2/C Black and White; 3/C Black, White, and Green; 4/C Black, White, Red and Green; 5/C Black, White, Red, Green, and Orange
Jacket:	Heavy-duty Neoprene per ICEA S-68-516. Color: [Black] [Yellow]
Manufacturer(s):	Okonite: Okocord; American Insulated Wire Cord equal; or Engineer accepted equal.
Execution:	
Installation:	Install in accordance with paragraph 26 01 20-3.02.
Testing:	Test in accordance with paragraph 26 01 20-3.05.

Cable System Identification:	COAX
Description:	Premise Cable: Indoor Riser and Plenum with FRPE Jacket Outdoor / Watertight: Ductbanks Systems with PE Jacket Low Loss Flexible Communication Coaxial Cable
Voltage:	300 V; Voltage Withstand: 3000 Volts DC;

Cable System Identification:	COAX
Conductor Material:	Solid 18 AWG; Nominal Impedance: 50-ohm; Nominal Capacitance: 20 Pico-Farad per foot; Bend Radius: 2 inches
Insulation Material:	Foam Polyethylene (PE) or Tetrafluoroethylene (TFE) UL Flame Test: NFPA-262 NEC Type Specification: CMP
Jacket:	Polyethylene (PE), Fire Retardant Polyethylene (FRPE) or Fluorinated Ethylene Propylene (FEP)
Manufacturer(s):	Times Microwave System: LMR-500; Belden Number 83242: 50-ohm Coax -- RG Type 142 B/U; or Engineer accepted equal.

Execution:

Applications:	Giga-Hertz Data Communications, CCTV Fixed. Component or Composite Video, Digital Video
Installation:	Install in accordance with associated equipment manufacturer's instruction. Provide male, female, TNC Male, UHF Male, straight, bulkhead, right-angle etc connectors, fittings, with crimp tools, dies, strip tools, deburr tools and cutting tools as required for the installation.
Testing:	Test in accordance with paragraph 26 01 20-3.05.

Cable System Identification:	Submersible Pump Cable
Description:	Extra Heavy Duty Flat Submersible Pump Cable
Voltage:	600 Vac
Conductor Material:	Soft annealed copper per ASTM B-33 and ASTMB-172 configured as flexible rope-lay-stranded.
Insulation Material:	EP: ethylene propylene rubber: Class 2.5A 90-degree C UL62

Cable System Identification:	Submersible Pump Cable
Jacket:	CPE: Chlorinated Polyethylene Rubber per ICEA S-75-381 and S-68-516 rated as moisture resistant and flame retardant, 90-degree C Dry and Wet.
Color Code:	Phase Conductors: black, yellow, red Ground Conductor: green with yellow stripe
Sizes:	AWG #4 through 500 kcmil
Manufacturer(s):	Paige Pumpwire or Engineer accepted equal.

Execution:

Applications:	Deep water well submersible pump cable installed within well casings
Installation:	Install in accordance with associated equipment manufacturer's instruction.
Testing:	Test in accordance with paragraph 26 01 20-3.05.

END OF SECTION

SECTION 26 01 40

WIRING DEVICES

PART 1--GENERAL

1.01 DESCRIPTION

This Section specifies wiring devices consisting of receptacles, plugs, switches and appurtenances.

1.02 REFERENCES

This Section contains references to the following documents. They are a part of this Section as specified and modified. In the event of conflict between the requirements of this Section and those of the listed documents, the requirements of this Section shall prevail.

Reference	Title
NEMA 250	Enclosures for Electrical Equipment (1000 volts maximum)
NEMA WD-1	General Requirements for Wiring Devices
NFPA 70	National Electrical Code (NEC)

PART 2--PRODUCTS

2.01 GENERAL

Wiring devices shall be UL approved for the current and voltage specified and shall comply with NEMA WD-1. Devices shall contain provisions for back wiring and side wiring with captive binding screws.

Provide devices colored to conform to manufacturer's or industry standard for special use such as orange for isolated ground receptacles, blue for surge suppression receptacles, and red for emergency power receptacles. Normal use devices shall be brown and devices located in finished areas shall be ivory.

2.02 RECEPTACLES AND PLUGS

A. GENERAL:

Receptacles shall be grounding type.

B. 120V RECEPTACLES:

1. INDOOR, CLEAN AREAS: Unless shown otherwise on the Drawings or Schedules, receptacles shall be duplex 20 amp, NEMA 5-20R, and shall accept NEMA 5-15P and 5-20P plugs. Where the manufacturer of cord connected equipment requires and isolated ground, a receptacle with isolated ground shall be provided.

Isolated ground receptacle manufactures: [Hubbell IG-5362, Arrow-Hart IG5362], or equal.

Manufactures: [Hubbell 5362, 5362-AI] or equal.

2. OUTDOOR, PROCESS OR CORROSIVE AREAS: Receptacle shall be duplex, 20 ampere, NEMA 5-20R, and shall accept NEMA 5-15P and 5-20P plugs. Receptacle and plug shall be corrosion resistant, marine duty with yellow polycarbonate weatherproof lift covers.

Manufacturers: [Hubbell 53CM62/53CM21, 15W33W/O BOX], or equal.

C. 250V RECEPTACLES:

Receptacles shall be duplex 15 ampere, NEMA 6-15R, and shall accept NEMA 6-15P plug caps.

Manufacturers: [Hubbell 5662, Arrow Hart 5662, or equal. Plug caps shall be Hubbell 5666-C, Arrow-Hart 6866], or equal.

D. PLUG CAPS:

Male plug caps for 120 volt and 250 volt receptacles shall be of the cord grip armored type with heavy phenolic housing, of the same manufacture as the receptacle. Plug caps shall be rated 15 amps. One plug cap shall be provided for every four receptacles furnished, with a minimum of two plug caps being provided. Plug caps shall be delivered to Arizona Water Company.

E. THREE PHASE RECEPTACLES AND PLUGS:

Receptacles shall be suitable for 480 volt, 3-phase, 4-wire service, with ampere ratings as specified. Receptacles and plugs shall be designed so that the grounding pole is permanently connected to the housing. The grounding pole shall make contact before the line poles are engaged when the plug is connected to the receptacle housing.

The plug sleeve shall also make contact with the receptacle housing before the line and load poles make contact. Receptacles shall be provided complete with cast back box, angle adapter, gaskets, and a gasketed screw-type, weathertight cap with chain fastener. Each receptacle shall be provided with one plug.

Manufactures: [Crouse-Hinds "Arktite," Appleton "Powertite,"] or equal.

F. RECEPTACLES FOR HAZARDOUS AREAS:

Receptacles for use in hazardous areas shall be rated in accordance with NEC for the area in which they are to be located and shall be factory sealed. Receptacles shall be designed so the plug must be inserted and turned before load is energized. Receptacles shall be provided with mounting box, sealing chamber, and compatible plug. Voltage and current ratings shall be as 120 Vac, 20-ampere.

Manufactures: [Appleton "U-Line," Crouse-Hinds "Ark-Gard 2,"] or equal.

2.03 SWITCHES

A. GENERAL PURPOSE (INDOOR, CLEAN AREAS):

General purpose switches shall be quiet AC type, specification grade, back and side wired, and shall be provided in accordance with rated capacities as required or as indicated on Drawings or Schedules. Switches shall match receptacles in color.

Manufactures: General Electric, Hubbell, or accepted substitute, as follows:

	15A, 120-277V		20A, 120-277V	
	G.E. Co.	Hubbell	G.E. Co.	Hubbell
Single:	PS 15AC1	HBL1201	PS 20AC1	HBL1221
Three-way:	PS 15AC3	HBL1203	PS 20AC3	HBL1223
Four-way:	PS 15AC4	HBL1204	PS 20AC4	HBL1224
SPST momentary:	# 7842	--	--	--
Three position center off momentary:	# 1250	HBL1556	--	HBL1557

B. SWITCHES FOR HAZARDOUS AREAS:

Switches for control of lighting and small single-phase power loads in hazardous areas shall consist of a factory assembled and sealed combination general purpose type switch in an explosion-proof housing.

Switches shall be rated in accordance with NEC for the area in which it is to be installed. The external operating mechanism shall consist of a wing-type handle having the "ON" and "OFF" positions visible from the front.

Manufactures: [Crouse-Hinds EDSC Type, Appleton EDSC Type], or equal.

C. SWITCHES FOR OUTDOOR AND CORROSIVE AREAS:

Switches shall be 20-ampere with weatherproof/ corrosion resistant neoprene plate. Switches shall be mounted in "FS" type copper-free aluminum or PVC mounting boxes.

Manufactures: Hubbell or Arrow-Hart as follows:

	Hubbell with 17CM50 plate	Arrow-Hart with 2881 plate
Single pole	1281	2991
Double pole	1282	2992
3-way	1283	2993
4-way	1284	2994

2.04 DEVICE PLATES

Device plates shall be provided with switches. In non-corrosive indoor areas, receptacle device plates shall be made of sheet steel, zinc electroplated with chrome finish as manufactured by Crouse-Hinds, Appleton, or equal.

Device plates in corrosive or outdoor areas shall be corrosion-resistant/marine-duty type. Device plates for explosion-proof equipment shall be factory provided with the equipment.

Device plates shall be provided with engraved laminated phenolic nameplates with 1/8-inch white characters on black background.

Nameplates for switches shall identify panel and circuit number and area served. Nameplates for receptacles shall identify circuit and voltage if other than 120 volts, single phase.

2.05 PLUG STRIPS

Plug strips shall be manufactured of sheet steel with the receptacles mounted on the front cover. The front cover shall be removable.

Plug strips for office and laboratory areas shall have single 3 wire, 20 ampere grounding type receptacles mounted along the strip on a single circuit.

Plug strips for work benches in shop and laboratory areas shall have 3 wire, 20 ampere grounding type duplex receptacles mounted along the strip on the circuits specified. Sufficient space shall be provided behind the receptacles for ten No. 12 AWG conductors in accordance with the NEC space rules.

Manufacture of plug strips: Plugmold, or equal.

2.06 PRODUCT DATA

The Contractor shall provide catalog cuts for all materials provided under this section.

PART 3--EXECUTION

Boxes shall be independently supported by galvanized brackets, expansion bolts, toggle bolts, or machine or wood screws as appropriate. Wooden plugs inserted in masonry or concrete shall not be used as a base to secure boxes, nor shall welding or brazing be used for attachment.

Receptacles and switches installed in sheet steel boxes shall be flush mounted. Flush mounted receptacles shall be located 18 inches above the floor unless otherwise indicated. Switch boxes shall be mounted 48 inches above the floor. Receptacles installed in cast device boxes shall be located 48 inches above the floor.

Wiring devices shall be tested for correct connections.

END OF SECTION

SECTION 26 01 55

INDIVIDUAL MOTOR STARTERS

PART 1--GENERAL

1.01 DESCRIPTION

This section specifies individual motor starters and motor controllers installed in enclosures other than motor control centers. Refer to drawings for product, device, and circuit requirements.

1.02 REFERENCES

This section contains references to the following documents. They are a part of this section as specified and modified. In the event of conflict between the requirements of this section and those of the listed documents, the requirements of this section shall prevail.

Reference	Title
NEMA ICS 1	General Standards For Industrial Control and Systems
NEMA 250	Enclosures for Electrical Equipment (1000-Volt Maximum)

1.03 SUBMITTALS

The following submittals shall be provided:

1. Verification of fault withstand ratings, as applicable, and interrupting ratings

2. The bill-of-material, schematic diagram, and wiring diagrams

PART 2--PRODUCTS

2.01 ENCLOSURE

The door to the motor starter enclosure shall be interlocked with an externally operated disconnect handle. Disconnect handle shall be arranged to indicate disconnect position. The disconnect operator handle shall have provisions to accept up to three 3/8-inch shackle padlocks to lock the disconnect in the open position.

Enclosures shall be:

1. NEMA 12 for indoor areas.
2. NEMA 4X for outdoor and process locations.
3. NEMA 7 cast metal for hazardous areas.

2.02 MOTOR BRANCH CIRCUIT PROTECTION

A. GENERAL:

Motor branch circuit protection shall be provided by fused disconnect switches or molded case motor circuit protectors as specified or as indicated.

B. FUSED DISCONNECT SWITCHES:

Fused disconnect switches shall be provided with visible knife blades, shielded line terminals and quick-make, quick-break switch operator. Fuse clips shall be Class R rejection type and sized for UL Class RK, one-time, time-delay fuses. Fuse assembly shall have a minimum short circuit capacity of 50,000 amps symmetrical.

C. MOLDED CASE MOTOR CIRCUIT PROTECTORS:

The motor circuit protector (MCP) type molded case circuit breaker shall only be used as a part of a combination motor starter.

The MCP shall operate on the magnetic principle with a current sensing coil in each of the three poles to provide an instantaneous trip for short circuit protection. The trip setting shall be adjustable over a range of 700 to 1300 percent of the full load current of the motor served and shall be adjustable from the front of the breaker.

The MCP circuit breaker shall be rated to interrupt 42,000 ampere symmetrical when used in conjunction with an individual motor starter.

2.03 MOTOR STARTERS

The basic full voltage, non-reversing motor starter (FVNR) shall consist of a 3 pole, 600 volt AC contactor, transient surge suppressor, and solid-state overload relay, NEMA Size-1 minimum.

Reversing (FVR) and multispeed (2S2W) starters shall have additional contactors, overload relays and auxiliary relays as required for the specified functions.

The contactors shall comply with NEMA ICS and NEMA rated for the horsepower as specified.

Overload relays shall be adjustable solid-state with protection for each of the poles. An overload condition shall cause the overload relay to latch in the open position.

Reset shall be accomplished with a reset button located on the unit door exterior. Trip setting shall be adjustable from 85 to 115 percent of rating. Provide [1] [2] Form-C 2-ampere auxiliary contact for remote monitoring of the overload alarm condition.

2.04 SOLID STATE STARTERS

The solid state reduced voltage motor starter shall consist of a self-contained unit for the control of 3-pole, 460-volt, 60-Hertz electric motors. The starter shall use solid-state components to limit current

during motor starting and stopping. The starter shall include built-in bypass contacts operating closed when the motor is running at speed.

Controls shall permit selection among soft-start with selectable kickstart, current limiting with starting that is programmable 50 to 600 percent of full load current and field set as required. Full voltage start with ramp time less than 0.25 second, dual ramp start, or a start profile designed to reduce fluid surges when starting pumps. Controls shall permit field selection among ramp to stop, coast to stop, or stop profile designed for use with pumps.

Provide an alphanumeric, backlit LCD display. Example: four-line 16-character, for controller set-up, diagnostics, status and monitoring. Provide a keypad for parameter adjustment.

Provide motor overload protection with selectable trip classes of 10, 15, 20 and 30 utilizing three-phase current sensing, initially field set at 20 and field adjusted as required for the application by the Factory Engineer.

Provide a minimum of four 2-ampere, 240 Vac rated auxiliary contacts for customer use. Configure output contacts for: "Auto-Mode" status, "Ready" status, "Full-speed-Bypass" status, and "Fault" alarm. Provide for remote start command. Provide for remote stop command.

Provide the following monitoring functions indicated through the LCD display:

1. Three-phase current
2. Three-phase voltage
3. Power in kW
4. Power usage in kWh
5. Power factor
6. Elapsed time.

Provided as standard:

1. Pre-start line fault alarm
2. Running line fault advising power loss
3. Shorted or missing load connection
4. Pre-start power loss with phase indication
5. Over-temperature
6. Fault alarm with phase problem indication.

Provide the following defeatable protection as standard:

1. Under-load
2. Under-voltage
3. Over-load
4. Over-voltage
5. Voltage Unbalance
6. Excessive Starts Per Hour
7. Phase Reversal

8. Stall
9. Jam.

When fault conditions are detected, the controller shall inhibit starting or shut down. Fault diagnostics shall be indicated in descriptive text on the LCD display. The exclusive use of fault codes is unacceptable. Provide an auxiliary contact that is programmable for fault indication.

Manufacture and model:

1. Eaton - Cutler Hammer
2. Allen Bradley
3. Benshaul

2.05 TERMINAL BLOCKS

Terminal blocks shall be heavy duty, rated at 20 amperes, 600 volts, and shall contain integral marking strips.

Terminal blocks shall be provided for external control connections. Spare terminals shall be provided as specified. Terminals shall be permanently identified with the numbers specified.

2.06 CONTROL DEVICES

Combination starters shall be provided with door-mounted control devices as shown on the diagrams. Control devices shall be as specified in Section 26 01 75.

2.07 TRANSIENT SURGE SUPPRESSORS

Transient surge suppressors shall be provided in each starter. Suppressors shall be encapsulated, three component, solid-state circuit, in a module suitable for mounting directly to the starter coil. Additional space for suppressors shall not be required. Suppressors shall be rated 120 volts AC/DC.

2.08 CONTROL CIRCUIT TRANSFORMERS

Each combination motor control unit shall be provided with a control circuit transformer rated for 480 x 240-120V, single phase, 60 Hertz. Unless otherwise specified, transformers shall have a minimum volt-ampere rating as follows:

Starter	CPT Minimum Volt-Ampere Rating
Size 1	100
Size 2	150
Size 3	200
Size 4	300

The transformer size shall be increased if the devices applied will cause a control transformer overload or secondary terminal voltage to drop to or below 95 percent of rated secondary control voltage when rated primary voltage is applied. Each control transformer shall be mounted within the enclosure along with its associated circuit breaker and starter.

2.09 CONTROL CIRCUIT FUSING

Two primary fuses, rated to interrupt 200,000 amperes at 600 volts, shall be provided on all motor starters.

Each control circuit transformer shall be provided with one control circuit secondary fuse. The secondary fuse shall have an interrupting rating of 10,000 amperes at 250 volts. The secondary fuse shall be sized at 125 percent of full load current. Fuses shall have time delay characteristics as required to prevent false tripping due to coil in-rush currents.

Fuse holders shall be lamp indicating type for blown fuse indication and shall contain neon lamp, clear transparent knob, and solder terminals.

2.10 WIRING

Conductors shall be 90-degree C switchboard type. Conductors shall be identified with tag numbers as specified in 26 00 00.

2.11 MANUAL STARTERS

Manual starters shall comprise a horsepower rated quick-make, quick-break, toggle mechanism together with overloads in all phase conductors.

2.12 NAMEPLATES

Nameplates shall be provided in accordance with the requirements of 26 00 00.

2.13 PRODUCT DATA

The following product data shall be provided:

1. Operating and maintenance as specified.

2. Manufacturer's catalog data for all material provided under this section. The catalog data shall be assembled in a folder with each page clearly marked with the item and reference number to the specification.

3. MCP and solid-state overload rating selection data.

4. Product calibration and setup information.

5. A copy of the electrical diagrams in a plastic folder in the units.

PART 3--EXECUTION

3.01 DEVICE CALIBRATION AND TESTING

The Contractor shall size the overload relay heater elements or adjust the solid-state overload device to the actual nameplate full load amperes of the motor connected to the starter.

The Contractor shall adjust motor circuit protector to the lowest setting not causing false tripping.

The Contractor shall record the settings on each motor controller and record the settings as part of the Record As-Built drawing submittal.

3.02 MOUNTING HEIGHT

The Contractor shall mount the center of the local motor starters at 48 inches above the floor or grade.

3.03 TESTING

Local motor starters and circuits shall be tested in accordance with Section 26 00 30-Testing.

END OF SECTION

SECTION 26 01 75

MISCELLANEOUS ELECTRICAL DEVICES

PART 1--GENERAL

1.01 DESCRIPTION

The vendor, manufacturer, and custom control panels shall provide enclosures, selector switches, pushbuttons, indicators, terminal strips, surge devices, nameplates, testing procedures, wiring method, wiring color coding, wire labeling, separation between power, controls, and instruments, hardwired logic relays or PLC logic products as specified herein [and in Section 26 01 76 or 27310].

A. This section specifies electrical control and monitoring devices:

1. Control Devices:

   a. Pushbuttons
   b. Selector Switches
   c. Indicating Lights
   d. Control Station Enclosures

2. Control Relays:

   a. Load-Switching
   b. Logic Level Switching
   c. Timers and Time Switch
   d. Alternators

B. This section specifies power devices:

1. Magnetic Contactors:

   a. Lighting Contactors
   b. Motor Contactors

2. Safety Disconnect Switches

3. Manual starters per Section 26 01 55 – Individual Motor Starters

4. Field Instrument and Field Analyzer: Key-Switch in control station with surge devices

5. Overcurrent Protection: Circuit breakers

6. Elapsed Time Indicators

7. Current transformers and transducers

8. Time Switch

9. Motor Driven Timers – On Delay and Off Delay

10. Intrusion Switches and Override Key Switches

11. Thermostats

12. Static Ground Indicator and Interlock System

C. Request clarification where conflicts occur with this section and other sections in Divisions 11, 15, 26 and 27.

1.02 REFERENCES

This section contains references to the following documents. They are a part of this section as specified and modified. Where a referenced document contains references to other standards, those documents are included as references under this section as if referenced directly. In the event of conflict between the requirements of this section and those of the listed documents, the requirements of this section shall prevail.

Unless otherwise specified, references to documents shall mean the documents in effect at the time of Advertisement for Bids or Invitation to Bid or on the effective date of the Agreement if there were no Bids.

If referenced documents have been discontinued by the issuing organization, references to those documents shall mean the replacement documents issued or otherwise identified by that organization or, if there are no replacement documents, the last version of the document before it was discontinued.

Where document dates are given in the following listing, references to those documents shall mean the specific document version associated with that date, regardless of whether the document has been superseded by a version with a later date, discontinued or replaced.

Reference	Title
NEMA 250	Enclosures for Electrical Equipment (1000 volts maximum)
NEMA ICS-1	General Standards For Industrial Controls and Systems
NEMA ICS-2	Industrial Control Devices, Controllers, and Assemblies
NEMA KS 1	Enclosed Switches

1.03 SUBMITTALS

The following submittals shall be provided in accordance with Section 26 01 76:

1. A copy of this specification section, with addendum updates included, and all referenced and applicable sections, with addendum updates included, with each paragraph check-marked to indicate specification compliance or marked to indicate requested deviations from specification requirements.

   Check marks shall denote full compliance with a paragraph as a whole. If deviations from the specifications are indicated, and therefore requested by the Contractor, each deviation shall be underlined and denoted by a number in the margin to the right of the identified paragraph, referenced to a detailed written explanation of the reasons for requesting the deviation.

   The Construction Manager, Arizona Water Company, shall be the final authority for determining acceptability of requested deviations. The remaining portions of the paragraph not underlined will signify compliance on the part of the Contractor with the specifications.

   Failure to include a copy of the marked-up specification sections, along with justification(s) for any requested deviations to the specification requirements, with the submittal shall be sufficient cause for rejection of the entire submittal with no further consideration.

2. Arrangement drawings of the panel enclosure indicating the front door and panel equipment arrangement and dimensions, and enclosure type.

3. Nameplate legend with engraving and sizes.

4. Internal layout drawings showing all components.

5. List of materials and components with the layout drawings.

6. Elementary / schematic diagrams

7. Internal wiring connection diagrams.

8. External wiring interconnection diagrams including interlocks.

9. Power and control single line diagrams, where motor controllers are included.

10. Manufacturer's catalog data for all material provided under this section shall be assembled in a folder with each page clearly marked with the item model number and reference number to the specification.

PART 2--PRODUCTS

2.01 CONTROL DEVICES

A. PUSHBUTTONS:

Pushbuttons shall be flush head, heavy-duty, with NEMA rating to match enclosure type. Operators shall be green for start function, red for stop functions, and black for all other functions. The escutcheon legend shall be as specified on the drawings.

1. UL Listed.

2. Dielectric Strength: 1300 Volts for one minute for Logic Reed contacts, 2200 Volts for one minute for other contacts.

3. 30.5mm mounting hole.

4. Temperature operating range –10 degree C. to +55 degree C.

5. Momentary contact type

6. When switching circuits are monitored by programmable controllers or other solid state circuits, furnish hermetically-sealed, logic-reed type contacts rated not less than 0.15 amperes at 150 Vac and 0.06 amperes at 30 Vdc.

7. When switching circuits are not monitored by programmable controllers or other solid state circuits, furnish contacts with NEMA Utilization Category rating A600 rated not less than 10 amperes continuous and 6 amperes break at 120 Vac.

Manufacturer: Allen-Bradley 800T/800H series or equal.

B. SELECTOR SWITCHES:

Selector switches shall be heavy-duty with NEMA rating to match enclosure type. Selector switches shall have maintained position contacts. Switches shall be provided with contact blocks and number of positions as required performing the specified or indicated operations.

The escutcheon legend shall be as specified on the drawings. Provide:

1. UL Listed.

2. Dielectric Strength: 1300 Volts for one minute for Logic Reed contacts, 2200 Volts for one minute for other contacts.

3. 30.5mm mounting hole.

4. Temperature operating range –10 degree C. to +55 degree C.

5. Standard knob operator (not lever type nor wing lever type)

6. Number of positions and contact configuration as shown on Drawings.

7. When switching circuits are monitored by programmable controllers or other solid state circuits, furnish hermetically-sealed, logic-reed type contacts rated not less than 0.15 amperes at 150 Vac and 0.06 amperes at 30 Vdc.

8. When switching circuits are not monitored by programmable controllers or other solid state circuits, furnish contacts with NEMA Utilization Category rating A600 rated not less than 10 amperes continuous and 6 amperes break at 120 Vac.

Manufacturer: Cutler Hammer or Square D..

Field instruments and field analyzers shall have a lock-out style selector switch for locking on or locking off the 120Vac power source. The selector switch shall use a control station in NEMA-12, 4, 4X, or 7 as required by the area classification.

Provide O-Z/Gedney Class 441 with two position key-operated maintained contact switch. Provide surge protection device that matches the enclosure type of the power disconnect type control station, field instrument, or field analyzer: Telematic TP48 transmitter surge protection device or equal.

C. INDICATING LIGHTS:

Indicating lights shall be heavy-duty full voltage 120Vac or 24Vdc push-to-test LED type with NEMA rating to match enclosure type for installation in a 30.5mm hole. Furnish with 28 chip high visibility LED. Manufacturer: Cutler Hammer or Square D.

Indicating Light Lens Color:

Lens Color	Typical Function	Example
Green	Danger, running	Equipment operating, motor running, valve open, power voltage applied, cycle in automatic
Amber	Fault condition, attention	Equipment failure, status abnormal
Red	Ready condition	End of cycle; unit or head returned; motors stopped; motion stopped; contactors open, valve closed
White or Clear	Normal condition	Normal pressure of air, water, lubrication, control power on, status okay
Blue	Advisory	Control mode not in automatic

D. CONTROL STATION ENCLOSURES:

1. Enclosures locations and ratings:

a. Indoors: NEMA 12

b. Outdoors and Corrosive areas: NEMA 4X stainless steel, [or non-metallic in chlorine storage areas]

c. NEC 500 Hazardous Areas: NEMA-7.

E. CONTROL POWER TRANSFORMERS:

1. Sized for the panel devices and products.
2. Dual primary and single secondary fusing.

2.02 CONTROL RELAYS

A. LOAD-SWITCHING CONTROL RELAYS:

Control relays used for switching loads such as solenoids, actuators, contactors, motor starter coils, remote interlocking, etc. shall be heavy-duty machine tool type.

Contacts shall be 4-pole and be field interchangeable to either normally-open or normally- closed. Relay shall be capable of accepting a 4-pole adder.

AC relays shall have NEMA A600 contact ratings and electrical clearances for 600 volts. DC relays shall have NEMA P300 contact ratings and electrical clearances for 250 volts.

Manufacturer: Allen Bradley Bulletin-700, Square D Class 8501, or equal.

B. LOGIC LEVEL SWITCHING CONTROL RELAYS:

Control relays for signal circuits shall have a minimum of three SPDT, gold-flashed, fine silver contacts rated 3-ampere resistive at 120V AC or 28Vdc.

Control relays shall be plug-in type with heavy-duty, barrier-protected screw terminal sockets and clear polycarbonate dust cover with clip fastener.

AC models shall have neon lamp indicator wired in parallel with coil. DC models shall have LED lamp indicator wired in parallel with coil.

Manufacturer: Potter Blumfield series KUP; Schrack Series RA; or equal

C. TIMERS:

1. Multi-function, micro-controller based, socket mounted timing relay.

2. Single functions:

a. Delay on Make
b. Delay on Break
c. Recycle (on time first, equal recycle delays)
d. Single shot
e. Interval

f. Trailing edge single shot
g. Inverted single shot
h. Inverted delay on break
i. Accumulative delay on make
j. Re-triggerable single shot

3. Dual functions:

a. Delay on make/delay on break
b. Delay on make/recycle (on time first, equal recycle delays.)
c. Delay on make/interval
d. Delay on make/single shot
e. Interval/recycle (on time first, equal recycle delays)
f. Delay on break/recycle (on time first, equal recycle delays)
g. Single shot/recycle (on time first, equal recycle delays)
h. Recycle – both times adjustable (on time first)
i. Recycle – both times adjustable (off time first)
j. Interval/delay on make
k. Accumulative delay on make/interval

4. Time delay range, switch selectable:

a. Single function 0.1 second to 1,705 hours in 8 ranges.

b. Dual function 0.1 second to 3,100 minutes in 8 ranges.

c. Setting accuracy +/- 1 percent or 50 milliseconds, whichever is greater.

d. Repeat accuracy +/- 0.1 percent or 16 milliseconds, whichever is greater.

5. Output:

a. Two Form-C electromechanical isolated contacts rated 10-amperes resistive at 240Vac

b. Rated 1/3-horsepower at 120 or 240Vac

c. Double-pole double-throw: DPDT.

d. Mechanical life: 10,000,000 operations

e. Electrical life: 1,000,000 operations at full load.

6. Mounting: Magnal Plug 11-pin socket

7. Environment: -20 to +65 degree C.

8. Manufacture:

a. ABB / SSAC's multifunction type TRDU time delay relay with dip-switch function setting with 12Vdc, 24Vac, 120Vac, 240Vac inputs as required or indicated or equal.

D. TIME SWITCH:

Provide an electronic time switch with full-year control in a NEMA 3R enclosure. The switch shall incorporate a non-volatile memory that maintains programmed switching times for the life of the time switch and provide a factory installed field replaceable lithium or alkaline battery for time keeping and calendar information for a minimum of 8 years. Furnish with one single-pole, double-throw output switch rated 20-ampere at 240Vac. Furnish with manual override control.

Manufacturer:

a. Intermatic Model ET70115CR or equal.
b. Paragon Electric Company, Inc. EC71ST or equal.

E. ALTERNATING RELAY:

1. Alternate assignment between "Duty" and "Stand-by" at the end of each run cycle.

2. Double-pole, double-throw output relay rated for 7-amps inductive at 120-volts AC. Isolation not less than 1,500-volt RMS input to output. Life of 1,000,000 operations at full electrical load.

3. Switch to select alteration or continuous operation of either load.

4. Mount in Magnal 11-pin socket.

5. Operating temperature range of –20 to +60-degree C.

6. Manufacturer: ABB-SSAC type ARP series or Engineer accepted substitute.

F. MOTOR DRIVEN TIMERS- ON DELAY AND OFF-DELAY:

1. Time Delay Relay - Upon Energization (TDE) or Upon De-Energization (TDDE): TDE driven by a 120 Vac synchronous motor that starts timing when initiated by an external signal via closing a dry contact. Turn a knob on the front of the dial for time settings. TDE device will reset upon power failure. TDDE device will not reset upon power failure. Special configuration where specified: will not reset upon power failure.

2. Provide a pilot light visible from the front of the timer to indicate when the timer motor is energized. Provide visual indication by a cycle progress pointer that advances to zero from the setting then back to zero as time progresses.

3. Provide two of "instantaneous" NEMA Form-C output contacts that actuate when the timing is initiated. Provide two "delayed" NEMA Form-C contacts that actuate when the unit has timed out or de-energized. The timer automatically resets, when the timing cycle is completed. Contact ratings: 10-ampere at 120 Vac and 5-ampere at 240 Vac.

4. Permanently mount and setup the timer with the initial settings shown or specified. Timer range with 16 configurations from 5-seconds to 60-hours. Range and timer setpoints shown on drawings.

5. Timer Manufacturer: Eagle Cycl-Flex Automatic or Manual Reset Timer: HP5 series or HP5E series; Automatic Timing Controls, Series 305D Motor Driven Analog Reset; or equal.

2.03 MAGNETIC CONTACTORS

A. LIGHTING CONTACTOR:

Lighting contactors shall be 100 percent rated for ballast and tungsten lighting, resistance and other non-motor loads.

Contactor shall be rated 600Vac, 60-Hertz with the ampere rating and number of poles as indicated on the drawings. Provide a minimum of two poles per NEMA ICS 2-211B for industrial-duty applications.

The following options shall be available and shall be provided as indicated on the drawings:

1. Auxiliary contacts rated 5-amperes at 600Vac.
2. Timer or time clock attachment.
3. Transient suppression module for 120Vac control circuits.
4. Electrically or mechanically held as specified.

Contactors shall be provided with disconnecting means and overcurrent protection mounted in the same enclosure.

Manufacturers:

1. ASCO 918 Remote Control with control module
2. Cutler Hammer equal
3. Square D Class 8903

B. MOTOR CONTACTORS:

Motor contactors shall be designed for continuous operation of induction motors at 600Vac or less at 60-Hertz and shall comply with NEMA ICS 2-210.

The minimum contactor size shall be NEMA Size-1.

Motor contactors shall be supplied with a normally open auxiliary contact for use as a hold-in-contact and status contacts with a minimum of two additional Form-C contacts. Provide 120Vac coil voltage and 60-Hertz frequency with the number of poles and auxiliary contacts as indicated.

Manufacturer: Square D or Eaton-Cutler Hammer.

2.04 SAFETY DISCONNECT SWITCHES

Safety disconnect switches shall be heavy-duty, 30-400-ampere ratings as indicated, [circuit breaker operating or fused] or non-fused as indicated, stainless steel operator, safety type rated 600 volts AC.

Provide fusible disconnect switches with ratings as indicated with built-in fuse pullers. Provide LPS, LPN, or LPJ 200KAIC current limiting fuses as appropriate for the circuit type and the circuit voltage.

Enclosure locations and ratings:

1. Indoor enclosures: NEMA 12

2. Outdoor or corrosive areas: NEMA 4X [nonmetallic for chlorine storage areas, or stainless steel]

3. Hazardous areas: NEMA 7

4. Classified areas: Suitable for the specified classification.

The operating handle shall be capable of being padlocked in the "off" position. The operator shall be a positive, quick-make, quick-break mechanism. Provide bolt-on hubs. Provide door lock. Provide nameplates with the equipment tag number, equipment description, and power source as indicated on the drawings. Submit nameplate list.

Switches shall be horsepower rated for motors and shall comply with NEMA KS-1. Switches shall be provided with defeatable door interlocks that prevent the door from opening when the operating handle is in the "on" position. Switches shall have line terminal shields.

Manufacturer: Cutler-Hammer or Square-D.

2.05 OVERCURRENT PROTECTION

A. CIRCUIT BREAKERS:

Circuit breakers shall be thermal magnetic, molded case type with the ampere rating as specified. Unless otherwise specified or indicated, circuit breaker interrupting rating shall be 22,000 amperes symmetrical.

2.06 ELAPSED TIME INDICATORS

Elapsed time indicators shall be panel mounted, non-resettable, 5.5-digit, hour indicator, rated 120Vac, 60-Hertz.

2.07 CURRENT TRANSFORMERS AND TRANSDUCERS

Provide monitoring current transformers with 600Vac insulation and primary ampere rating as indicated with 5-ampere output.

Provide AC current transducer for any one of the phase conductors of the power circuit to be installed through onboard toroid. Provide a loop-powered transducer with input rated from 0 to 50-ampere with 4-20madc analog output scaled for the primary current of the current transformer. Provide zero and span adjustments.

Manufacturer: ABB AC current transducer TCSA Series Loop Powered and mounting accessories, or equal.

Provide a DIN rail or back plate mounted AC current transducer that is a loop-powered transducer with input rated from 0 to 5-ampere and with 4-20madc analog output scaled for the primary current of the current transformer.

Manufacturer: ABB AC current transducer DCSA Series Loop Powered and mounting accessories, or equal.

2.08 TERMINAL STRIPS, BLOCKS, AND DEVICES

A. Power Wiring: Provide back plate mounted terminal strips rated at 600 Vac.

B. Control Wiring: Provide a DIN rail with spring powered contact rated at 300 Vac 24 ampere with pluggable terminals.

C. Terminal identification standard to the product provided.

D. Manufacturer:

1. Standard: Cutler Hammer or Square D.

2. Standard: DIN rail: Phoenix Contact or Weidmuller Z-Series.

2.09 INTRUSION DEVICES

The intrusion switch shall be wide-gap industrial grade magnetic door switch with maximum gap 2.5 inches between the sensing elements. The magnet element shall be mounted on the moving part of the door. The sensor switch shall close when the door is closed. The sensor switch shall open when the door is opened. Provide with appropriate mounting bracket for the entrance doors.

Manufacturer: George Risk Industries - Series 4400 (800-445-5218), http://www.grisk.com/security_products.htm or equal.

The intrusion override key switches shall be access control type with mortise cylinder and 24 Vdc single pole double threw (SPDT) maintained contacts.

Manufacturer: Von Duprin SS-900 [_____] series.

2.10 THERMOSTATS

Thermostats shall be line voltage type with motor current rated contact and 70-degree to 140-degree Fahrenheit setpoint range.

Manufacturer: Honeywell T631A-1022 or equal.

2.11 STATIC GROUND INDICATOR

Provide a static ground indicator and interlock system for verification of static ground connection to plant equipment, tanker trucks, drums, containers with flammable liquids or powders that are transferred and requiring effective grounding and bonding .

Provide an explosion proof controller that meets NFPA 77 requirements with an intrinsically safe monitoring circuit that verifies a low resistant ground connection and dissipation path to ground. Product shall include an indicator light and interlock enabling product transfer and shall be rated for 120Vac power circuit.

Manufacturer: Earth-Rite Plus with Hytrel Cable and Ground Clamp or equal.

2.12 NAMEPLATES

Nameplates for all control stations, relays, timers, motor contactors and disconnect switches shall be provided in accordance with the requirements of Section 26 00 00.

2.13 PRODUCT DATA

Operation and maintenance data as specified including approved submittal manufacturer's catalog data, as-built drawings, and instructions for all configurable or programmable components.

PART 3--EXECUTION

Control stations, contactors and safety disconnect switches shall be mounted 48 inches above the floor, ground, or slab to center of device.

Miscellaneous electrical devices shall be tested in accordance with Section 26 00 00 and Section 26 00 30.

END OF SECTION

SECTION 26 04 40

INSTRUMENT TRANSFORMERS, METERS, SWITCHES AND ACCESSORIES

PART 1--GENERAL

1.01 DESCRIPTION

This section specifies instrument transformers, meters, test switches and accessories for electrical distribution equipment assemblies.

1.02 REFERENCES

This section contains references to the following documents. They are a part of this section as specified and modified. In the event of conflict between the requirements of this section and those of the listed documents, the requirements of this section shall prevail.

Reference	Title
ANSI C37.20	Switchgear Assemblies Including Metal-Enclosed Bus
ANSI C39.1	Requirements for Electrical Analog Indicating Instruments
ANSI C57.13	Requirements for Instrument Transformers

PART 2--PRODUCTS

2.01 INSTRUMENT TRANSFORMERS

A. GENERAL:

Instrument transformers shall be molded dry-type in accordance with ANSI C57.13. Transformer volt-ampere rating shall be suitable for carrying the specified load without overheating or exceeding the permissible accuracy for the transformer.

B. POTENTIAL TRANSFORMERS:

Potential transformers shall have an ANSI accuracy class of 0.3. They shall be equipped with current limiting fuses.

C. CURRENT TRANSFORMERS:

Current transformers shall be furnished with the specified ratios. The accuracies shall conform to ANSI C37.20.

2.02 PANEL METERS AND POWER MONITORS

All indicating meters shall be 4-1/2-inch square, semi-flush mounted switchboard type. The movement shall be taut-band with an accuracy of plus or minus 1 percent of full scale. The case shall be black. The scale shall be white with black markings. The length of the scale shall be greater than 7 inches over a deflection angle of 250 degrees. The meters shall be manufactured in accordance with applicable requirements of ANSI C39.1.

Power Monitors and Analyzers shall be the standard product of the electrical equipment manufacture with the standard electrical parameter selection and display.

Power Monitors are required on all new electrical equipment: switchgear, switchboard, motor control center, automatic transfer switch to provide electrical parameter information about the electrical equipment for any voltage class. Two power monitors are required for double-ended and dual feed electrical equipment.

Power Monitors, where shown on the drawings, shall have the following analog 4-20 mAdc outputs:

1. Phase-Phase Voltage
2. Average Current
3. Power Factor or VARs
4. Kilo-Watt Hours

Power Analyzer Monitor combination units, where shown on the drawings, shall have harmonic analyzer ability that displays the voltage / current harmonic and the Total Harmonic Distortion for the electrical equipment being monitored.

[Where specified or indicated, provide manufacture standard power monitor with 4-analog outputs and RS-485 data communication output with [_____] protocol.]

2.03 INSTRUMENT SWITCHES

Instrument switches shall be provided with contact blocks and positions specified. Switches shall be of the rotary-cam type and contacts shall have positive wiping action of silver-to-silver contact buttons. Switches shall be provided with escutcheon plates and pistol-grip handles. Switches shall be General Electric, SBM; Siemens, ABB equal.

Voltmeter and ammeter switches shall have four positions with the escutcheon legend as follows:

Voltmeter	OFF	1-2	2-3	3-1
Ammeter	OFF	Phase A	Phase B	Phase C

2.04 KEY INTERLOCK

Where specified, the key interlock shall consist of two or more identically keyed brass bolt locks. The bolt on the lock shall prevent the operation of the electrical equipment. One brass key shall be provided for each group of identical locks. The key shall be held captive when the lock is positioned to allow equipment operation.

2.05 INDICATING LIGHTS

Indicating lights shall be resistor type of the voltage specified.

2.06 NAMEPLATES

Nameplates shall be provided in accordance with Section 26 00 00.

2.07 PRODUCT DATA

The following information shall be provided:

1. Operation and maintenance items as specified.
2. Manufacturer's product data with features and dimensions of devices.
3. Burden, accuracy class, and ratio data for instrument transformers.

PART 3--EXECUTION

Accessories and devices shall be installed per the electrical distribution equipment manufacturer's instructions.

END OF SECTION

SECTION 26 04 45

SURGE PROTECTIVE DEVICES

PART 1--GENERAL

This section specifics internal mounted transient voltage surge suppression (TVSS) for electrical equipment as service entrance equipment, switchgear, switchboards, and motor control centers.

Provide as per the same criteria specified herein for external TVSS where indicated on the drawings and with enclosures specified or indicated.

1.01 DESCRIPTION

A. SCOPE:

Provide TVSSs for service entrance equipment, switchgear, switchboards, and motor control centers specified in the Division 26 electrical distribution equipment specification sections or indicated on the Drawings.

Provide TVSS with the same voltage, phase, 3 or 4 wire system as the equipment that the unit is protecting and with the specified ratings to protect the host electrical equipment.

B. EQUIPMENT LIST:

Item	Equipment No.
Motor Control Center	
Panelboard	
Switchboard	
Switchgear	

C. OPERATING CONDITIONS:

Verify the project conditions for seismic zone, elevation, ambient temperature, corrosive atmosphere, and humidity.

D. PERFORMANCE REQUIREMENTS:

TVSS performance parameters required:

1. National Electrical Code (NEC) Section 285.2 and 285.6:

   a. Limit transient voltage by diverting or limiting surge current.

   b. Prevent continued flow of current following transient event while remaining capable of repeating these functions.

   c. Utilize fuses with repetitive surge capability to survive specified surge rating

and meet UL 1449.

d. Marked with a short circuit current rating and not installed where the available fault current (AIC rating) is in excess of that rating.

2. UL 1449 stipulation for fused TVSS:

a. Certify that the TVSS system conforms to UL 1449 2nd Edition.

b. Indicate the type of internal or external fusing.

3. Maximum clamping voltage:

Service voltage	Phase and wire	L-N	L-G	N-G
120 / 240V	1Φ 3W	400	400	400
240 / 120V	3Φ 4W	400/700	400	400/700
208Y / 120 V	3Φ 4W	400	400	400
240V	3Φ 3W	NA	800	NA
480Y / 277V	3Φ 4W	800	800	800
480V	3Φ 3W	NA	1500	NA

E. DESIGN REQUIREMENTS:

1. TVSS equipment enclosure shall match the host electrical equipment NEMA-Type enclosure.

2. TVSS equipment shall provide the following local monitoring features:

a. Local status and alarm monitoring.

b. Digital surge event counter with battery back-up; alkaloid batteries are not acceptable.

3. TVSS equipment shall provide the following local monitoring features where specified or indicated on the drawings:

a. Status and alarm dry contacts for remote monitoring.

b. Audible alarm with alarm disable switch.

c. Field adjustable sensitivity

1.02 QUALITY ASSURANCE

A. REFERENCES:

This section contains references to the following documents. They are a part of this section as specified and modified. In the event of conflict between the requirements of this section and those of the listed documents, the requirements of this section shall prevail.

Reference	Title
Underwriters Laboratories 1449 2nd Edition	Transient Voltage Surge Suppressors
Underwriters Laboratories 1283 3rd Edition	Electromagnetic interference filter for noise attenuation
MIL STD 220A, Rev A, Change Notice #2	Method of Insertion Loss Measurement
National Electrical Code 2002 Article 285 and Article 250.56	TVSS Installation practice and Grounding
NEMA LS-1-1992	National Electrical Manufactures Association: Low Voltage Surge Protective Devices
CUL	Canadian Underwriters Laboratories
ANSI/IEEE C62.41 1991 and C62.45-1992	American National Standards Institute/Institute of Electrical and Electronic Engineering Inc.
Underwriters Laboratories 67	Listing for internal panelboard TVSS
Underwriters Laboratories 891	Dead Front Switch boards

B. TESTING BY 3RD PARTY:

Certify that TVSS furnished have passed the following tests per NEMA LS-1-1992:

1. The TVSS device is repetitive surge current capacity tested utilizing a 1.2x50ms, 20kV open circuit voltage, 8x20ms, 10kA short circuit Category C3 test waveform at one minute intervals with less than 5% degradation of components.

   a. TVSS at service entrance: 20,000 Category C3 impulses
   b. TVSS at distribution: 5,000 Category C3 impulses

2. The rating shall be based on testing of a complete TVSS unit including fuses and all components that make up the TVSS system are expressed per mode.

3. The fusing system shall be capable of allowing the rated maximum surge current to pass through without fuse operation. Systems utilizing a fusing system that opens below the maximum surge current level are unacceptable. The fusing system shall use thermal fuses and surge rated fuses, which shall be included in the surge current testing.

4. Use of plug-in modules, printed circuit boards in surge current-carrying paths, gas discharge devices or selenium rectifiers is unacceptable.

5. The maximum Continuous Operating Voltage (MCOV) for all voltage configurations shall be 115% of nominal.

6. The use of electronic grade MOV's is not acceptable. Systems using gas tubes, silicon avalanche diodes, selenium rectifiers, or printed circuit board technology in surge current path are not acceptable.

C FACTORY TESTING

TVSS shall be factory tested prior to shipment.

D. SHIPMENT, PROTECTION, AND STORAGE:

Ship the TVSS components with the electrical equipment in accordance with the requirements specified and protect the equipment from damage, dirt, dust, rain, and other elements.

E. WARRANTY:

Provide a product warranty for a period of not less than five years from date of installation. Warranty shall cover replacement of TVSS during the warranty period if operation of TVSS does not meet manufactures guide specification performance criteria and the requirements specified in this Section 26 04 45.

In addition to the warranty submitted, provide a copy of the warranty inside of each TVSS enclosure.

1.03 SUBMITTALS

Submittals should be required for the following conditions:

1. A copy of this specification section, with addendum updates included, and all referenced and applicable sections, with addendum updates included, with each paragraph check-marked to indicate specification compliance or marked to indicate requested deviations from specification requirements. Check marks shall denote full compliance with a paragraph as a whole.

2. If deviations from the specifications are indicated, and therefore requested by the Contractor, each deviation shall be underlined and denoted by a number in the margin to the right of the identified paragraph, referenced to a detailed written explanation of the reasons for requesting the deviation.

3. The Construction Manager, Arizona Water Company, shall be the final authority for determining acceptability of requested deviations. The remaining portions of the paragraph not underlined will signify compliance on the part of the Contractor with the specifications.

4. Failure to include a copy of the marked-up specification sections, along with justification(s) for any requested deviations to the specification requirements, with

the submittal shall be sufficient cause for rejection of the entire submittal with no further consideration.

5. A copy of the contract document control diagrams and process and instrumentation diagrams relating to the submitted equipment, with addendum updates that apply to the equipment in this section, marked to show specific changes necessary for the equipment proposed in the submittal. If no changes are required, the drawing or drawings shall be marked *"no changes required"*. Failure to include copies of the relevant drawings with the submittal shall be cause for rejection of the entire submittal with no further review."

6. Drawings: Electrical and mechanical drawings shall be provided by the manufacturer which show unit dimensions, weights, mounting provisions, connection notes, wire size and wiring diagram.

7. Installation instructions: Clearly state rating of an overcurrent device to maintain the system's UL 1449 listing.

PART 2--PRODUCTS

2.01 GENERAL REQUIREMENTS

A. The TVSS shall be 7 modes (connection paths) of protection using metal oxide varistors (MOV) technology; tested by UL (1449, 2nd Ed) Suppressed Voltage Rating (SVR).

B. Primary transient paths shall utilize copper wire, aluminum bus bar and lugs of equivalent capacity to provide equal impedance interconnection between phases. No plug-in module or components shall be used in surge current carrying paths.

C. Each protection module shall have a visual indicator that signifies that each phase is on line. The unit shall not be taken off-line to verify integrity of system. Redundant status indicators shall be mounted on the front of the door that monitors the system protection circuitry.

D. Replaceable modules are not acceptable. TVSS will be replaced in the event a phase indicating light has extinguished, alarm annunciation with the service alarm light on.

E. The TVSS device EMI-RFI noise rejection or attenuation value shall be measured in accordance with the procedures outlined in NEMA LS-1-1992/MIL STD 220A. Noise Filter Capability (100KHz, 1MHz, 10MHz and 100MHz) shall not be lower than –44db attenuation.

F. TVSS shall provide protection in the following modes.

1. Line to Neutral (L-N) (Wye)
2. Line to Ground (L-G) (Wye or Delta)
3. Neutral to Ground (N-G) (Wye)

G. Rate surge protective device for continuous operation under the following service

conditions:

1. Altitude: 0-12,000 ft.
2. Humidity: 95% RH, non-condensing atmosphere.
3. Surface Temperature: less than 55°C.
4. Operating Temperature -40° C to +60°C.
5. Frequency 50-60 Hertz.
6. No Audible Noise

2.02 ELECTRICAL EQUIPMENT TVSS APPLICATIONS

A. Service Entrance Equipment, Switchboards, Switchgear, and Motor Control Centers.

B. TVSS equipment shall be a multi-stage parallel protector rated for voltage, phase, and the wire, plus ground and be internally mounted by electrical equipment manufacturers.

C. The equipment's minimum surge current capacity shall be:

1. 200kA per mode (L-N, L-G, and N-G).

2.03 BRANCH CIRCUIT PANEL PROTECTION

A. TVSS equipment shall be a multi-stage parallel protector rated for voltage, phase, and the wire, plus ground and be bus-to-bus mounted by electrical equipment manufacturer or externally field mounted as indicated on the drawings provided by electrical equipment manufacturer of the branch panel board.

B. The equipment's minimum surge current capacity shall be:

1. 65kA per mode (L-N, L-G, and N-G).

2.04 MANUFACTURERS

Service Entrance System equipment, Switchboards, Switchgear, and MCC:
Acceptable Manufacturers and Models:

1. Cutler Hammer
2. Square D
3. No other Manufacturers will be accepted.

2.05 PRODUCT DATA

The following information shall be provided:

1. Operation and maintenance information as specified.
2. Warranty specified in paragraph 26 04 45-1.02 E.

PART 3--EXECUTION

3.01 GENERAL

Verify TVSS specified and ratings indicated are furnished. Manufacturer's representative shall visit the site, verify installation and testing, and verify that the TVSS equipment and TVSS installation meets intent of the Contract Documents and manufacturer's warranties and that the guarantees are in effect.

3.02 INSTALLATION

A. Install according to manufacturers recommendations.

B. Lead lengths shall not exceed 18"

C. Electrical equipment manufacturer shall provide integral TVSS.

D. Electrical equipment manufacturer shall authorize and perform all bus taps electrical connections, as necessary.

END OF SECTION

SECTION 26 04 50

GROUNDING SYSTEM

PART 1--GENERAL

1.01 DESCRIPTION

This section specifies the system for grounding electrical distribution and utilization equipment, including but not limited to cabinets, motor frames, manholes, instrumentation, metal surfaces of process/mechanical equipment that contain energized electrical components, metal structures and buildings, outdoor metal enclosures, fences and gates.

The Equipment Grounding Conductor shall ground or bond equipment, structures, or equipment frames to the Grounding Electrode System as defined in the National Electrical Code Article 250 and addressed herein.

The minimum size of the Equipment Grounding Conductors installed with the circuit conductors shall be per the National Electrical Code Table 250.122. The circuit grounding conductor size routed with a feeder or branch circuit conductors is as shown on the drawings.

1.02 REFERENCES:

This section contains references to the following documents. They are a part of this section as specified and modified. Where a referenced document contains references to other standards, those documents are included as references under this section as if referenced directly. In the event of conflict between the requirements of this section and those of the listed documents, the requirements of this section shall prevail.

Unless otherwise specified, references to documents shall mean the documents in effect at the time of Advertisement for Bids or Invitation to Bid (or on the effective date of the Agreement if there were no Bids). If referenced documents have been discontinued by the issuing organization, references to those documents shall mean the replacement documents issued or otherwise identified by that organization or, if there are no replacement documents, the last version of the document before it was discontinued. Where document dates are given in the following listing, references to those documents shall mean the specific document version associated with that date, regardless of whether the document has been superseded by a version with a later date, discontinued or replaced.

Reference	Title
IEEE 81	Guide for Measuring Earth Resistivity, Ground Impedance, and Earth Surface Potentials of a Ground System
IEEE Std 81.2-1991	Guide to Measurement of Impedance and Safety Characteristics of Large, Extended or Interconnected Grounding Systems
NETA - ATS	InterNational Electrical Testing Association Inc. - Acceptance Testing Specifications
NFPA 70	National Electric Code (NEC) Article 250

PART 2-- PRODUCTS

2.01 GROUND CONDUCTORS

The System Ground Conductor shall be soft-drawn, bare annealed copper, concentric stranded, as specified. The minimum sizes shall be as follows, where American Wire Gage (AWG) conductor sizes are not shown or specified:

5 and 15 kV switchgear	2/0 or 4/0 AWG
5 kV motor starters	2/0 or 4/0 AWG
15 kV-5 kV transformers	2/0 or 4/0 AWG
5 kV-480V transformers	2/0 or 4/0 AWG
480V switchgear	2/0 or 4/0 AWG
480V switchboards	2/0 or 4/0 AWG
480V MCC and	2/0 or 4/0 AWG
Cable tray	2/0 or 4/0 AWG
Large motors 250 hp & >	2/0 or 4/0 AWG
Lighting & Power panels	2 AWG
Exposed metal cabinets	2 AWG
Electrical equipment	2 AWG
Buildings and enclosure	2 AWG
Fences and gates	2 AWG
Motors 25 hp to 250 hp	2 AWG
Motors 1 hp to 25 hp	6 AWG

2.02 GROUND RODS

Ground rods shall be copper covered steel, 3/4-inch diameter and 10-feet long. Rods shall have threaded type removable caps so that extension rods of same diameter and length may be added where necessary.

2.03 COMPRESSION CONNECTORS

Compression connections shall be irreversible, cast copper as manufactured by Thomas and Betts, or equal.

2.04 BOLTED CONNECTORS

Bolted connectors shall be Burndy, O. Z. Gedney, or equal.

2.05 WELDED CONNECTORS

Exothermic welding products shall be Erico's Cadweld Plus system with a remotely operated battery powered electronic ignition device and moisture resistant weld metal cup for the required mold, or equal.

2.06 TEST WELLS

Provide concrete test well with cover and connect the ground grid extension using a removable connector.

2.07 EQUIPMENT GROUND BARS

Copper equipment ground bars shall be Erico Eritech EGB Series or equal, sized as required for the installation.

2.08 PRODUCT DATA

Ground resistance readings specified in paragraph 26 04 50-3.05 shall be submitted.

PART 3--EXECUTION

3.01 GENERAL

Grounding system shall be provided in compliance with the NFPA 70 National Electrical Code (NEC). Grounding conductor shall not be used as a system neutral.

Embedded and buried ground connections shall be made by compression connectors utilizing diamond or hexagon dies and a hand compression tool for wire sizes 2 AWG and smaller and a hydraulic pump and compression head for wire sizes 2/0 AWG and larger. Alternate method allowed: exothermic welding using a remote igniter device.

Tools and dies shall be approved for this purpose; dimple compressions are not acceptable. Compression connections shall be prepared in accordance with the manufacturer's instructions. Compression-type lugs shall be used in accordance with manufacturer's recommendations. Exposed ground connections to equipment shall be made by bolted clamps unless otherwise specified. No solder material shall be used in any part of the ground circuits.

Embedded ground conductors and fittings shall be securely attached to concrete reinforcing steel with tie wires and prevented from displacement during concrete placement.

Notify the Construction Manager, Arizona Water Company, two hours prior to backfilling, as each part of the grounding system installed below finished grade is complete and ready for inspection. Non-compliance shall effect the payment schedule for this work.

Grounding conductors extended beyond concrete surfaces for equipment connection shall be extended a sufficient length to reach the final connection point without splicing. Provide grounding fittings, pads, or plates as shown in the electrical details. Minimum grounding conductor extension shall be 3-feet.

Grounding conductors which project from a concrete surface shall be located as close as possible to a corner of the equipment pad, protected by rigid conduit bonded to the grounding conductors, or terminated in a flush grounding plate.

Exposed grounding conductors shall be supported by noncorrosive metallic hardware at 4-foot intervals or less. Grounding conductors for future equipment shall be terminated using a two-hole copper flush mounted grounding plate, Erico Cadweld, Burndy YGF Series, or equal.

Ground conductors entering electrical enclosures shall be bonded to a single ground bus or terminal strip in the enclosure and to metallic raceways within or terminating at the enclosure. Direct ground connections to enclosure chassis or back plate are not acceptable. Prior to making ground connections or bonds, the metal surface at the point of connection shall be cleaned.

Lightning arresters shall be directly connected to the ground grid system using lightning industry braided copper conductors, sized as specified.

Metallic sheaths or shields of shielded power cable shall be terminated by a copper ground bus provided with cable connection for connection to the grounding system.

3.02 RACEWAY GROUND

All service, feeder and branch circuit raceways shall contain a green insulated ground conductor sized per applicable NFPA 70 National Electrical Code (NEC) tables:

1. T250.66 - Grounding Electrode Conductor for Alternating-Current Systems or

2. T250.122 - Minimum Size Equipment Grounding Conductors for Grounding Raceways and Equipment.

Metallic conduits terminating at concentric knock-outs or reducing washers shall be bonded using insulated grounding bushings. Grounding bushings shall be connected to the grounding system using conductors sized in compliance with NEC.

Cable trays shall have 2/0 or 4/0 bare copper ground conductor run on the outside of each tray or tray group of tiered cable tray. Conductor shall be connected to each section or fitting using an approved ground-clamp and supported at 5 foot intervals.

3.03 EQUIPMENT AND ENCLOSURE BONDING

Electrical distribution and utilization equipment enclosure ground bus, motor frames, manholes, metal structures and buildings, outdoor metal enclosures, fences and gates shall be bonded to the grounding system with conductor sizes as specified. Connect the conductor to the metal enclosure using a UL listed connector, where the enclosure does not contain an internal ground bus

Non-electrical equipment with metallic enclosures, that are located outdoor and without a cover or a shade, shall be connected to the grounding system.

3.04 ISOLATED GROUNDING

An isolated ground system shall be installed where required by an equipment manufacturer. The isolated ground conductor shall have green insulation with a yellow stripe and shall be run in the same raceway as the power and neutral conductors. The isolated ground bus shall be kept isolated from neutral and grounding buses.

Where specifically directed by the Engineer and required by an equipment manufacturer, the Contractor shall provide an additional isolated ground conductor from the service or separately derived system to an isolated ground bus bar at each associated distribution point.

3.05 SERVICE AND SEPARATELY DERIVED SYSTEM BONDING

A neutral bonding jumper shall be installed in only one location for each service or separately derived system. The bonding jumper shall be located at the service source or the first immediate distribution point downstream from the source. The neutral and ground buses shall be kept isolated from each other accept where the bonding jumper is installed.

3.06 GROUNDING SYSTEM TESTS

The Contractor shall test the facility grounding system and the building grounding system to determine the ground resistance. The grounding test shall be IEEE Standard 81 using the NETA Fall-of-Potential procedure. A plot of ground resistance readings for each isolated ground rod, ground mat, or ground bus shall be submitted on 8-1/2 x 11 inch size graph paper. Point-to-point resistance measurements are not acceptable.

The current reference rod shall be driven at least 100 feet from the ground rod or grid under test or as recommended by IEEE Standard 81. The measurements shall be made at 10-foot intervals beginning 25 feet from the test electrode and ending 75 feet from it, in direct line between the ground rod or center of grid and the current reference electrode.

A grounding system that shows greater than 2 ohm resistance for the flat portion of the plotted data shall be considered inadequately grounded.

The Contractor shall add additional parallel connected ground rods and/or deeper driven rods until the ground resistance measurements meet the 2 ohm requirement. Additional ground rods will be paid for as extra work where the required numbers exceed that specified when authorized and approved.

Use of salts, water, or compounds to attain the specified ground resistance is not acceptable.

END OF SECTION

SECTION 26 04 60

DRY-TYPE TRANSFORMERS
(600 VOLTS AND LESS)

PART 1--GENERAL

1.01 DESCRIPTION

This section specifies dry-type transformers with primary winding rated 600 volts and less used for power distribution, lighting and control purposes as specified or shown.

This section specifies mini-power centers that include the primary transformer protection, transformer, secondary protection and a circuit breaker panel in one package.

This section specifies K-Rated transformer with electro-magnetic shielding.

1.02 REFERENCES

This section contains references to the following documents. They are a part of this section as specified and modified. In the event of conflict between the requirements of this section and those of the listed documents, the requirements of this section shall prevail.

Reference	Title
ANSI/IEEE C57.12.01	General Requirements for Dry-Type Distribution and Power Transformers
ANSI/UL 506	Specialty Transformers
NEMA ST20	Dry-Type Transformers for General Application

1.03 RATINGS AND STANDARDS

Transformers rated:

1. 10 kVA and smaller shall be single phase or as indicated.
2. 15 kVA and greater shall be 3 phase or as indicated.
3. Voltage, frequency, number of phases and kVA as indicated.
4. Conform to ANSI/IEEE C57.12.01 and ANSI/ UL 506.

PART 2--PRODUCTS

2.01 MANUFACTURERS

Manufacturers include:

1. ABB

2. Eaton Cutler-Hammer
3. Square D

2.02 INSULATION

Transformers temperature rise based on 40-degree C ambient temperature:

1. 15 kVA and above: Not exceed [80] [115] [150] degree C temperature rise.
2. below 15 kVA: Not exceed [80] [115] degree C temperature rise.

2.03 COILS

Transformer coils:

1. Copper.
2. 15 kVA and above: impregnated with varnish.
3. 10 kVA and below: encapsulated.

2.04 WINDING CONFIGURATION

Transformers shall have electrically isolated primary and secondary windings. Primary and secondary winding configurations shall be as specified or shown. Provisions shall be made to permit separate grounding of the neutral conductor and the enclosure. Single-phase transformers shall be the four winding type.

2.05 TRANSFORMER TAPS

Transformers 15 kVA and above shall be provided with two 2-1/2 percent full capacity taps above normal voltage and four 2-1/2 percent full capacity taps below rated voltage on the primary winding.

2.06 TERMINAL COMPARTMENTS

Terminal compartments shall be sized to permit termination of cables specified. Terminal connections shall be made in the bottom third of the enclosure. The terminals shall be copper and sized for the cable specified.

2.07 ENCLOSURES

Transformers enclosures:

1. 15 kVA and smaller: weatherproof, nonventilated enclosures.
2. Indoor over 15 kVA: dripproof, ventilated enclosures.
3. Outdoor: weatherproof enclosures.

2.08 MOUNTING

Transformers 25 kVA and below shall be suitable for wall mounting and include mounting brackets and hardware. Transformers over 25 kVA shall be floor mounting type.

2.09 NAMEPLATES

Nameplates shall be provided in accordance with the requirements of paragraph 26 00 00-2.04.

2.10 SOUND LEVELS

The sound levels shall not exceed the following values:

kVA	dB
0-9	40
10-45	42
50-450	45
225-300	50
500	54

2.11 MINI-POWER CENTERS

Mini-power center (MPC) consists of an encapsulated dry-type transformer, primary and secondary main circuit breakers, and secondary panelboard all in one enclosure.

A. TRANSFORMER RATING:

KVA, primary voltage, secondary voltage, frequency and number of phases shall be as shown on the Drawings.

B. BRANCH CIRCUITS:

Molded case circuit breakers, plug-in thermal magnetic type with number of poles and trip ratings as shown on the Drawings.

C. ENCLOSURE:

Weatherproof, NEMA 3R.

D. MANUFACTURER:

1. ABB
2. Acme Electric Corporation
3. Eaton Cutler Hammer
4. Siemens
5. Square D Company.
6. or equal

2.12 NON-LINEAR LOAD K-FACTOR RATED TRANSFORMER

A. TYPE:

100 percent non-linear load rated specifically designed to handle non-linear loads with double size neutral for harmonic load.

B. K FACTOR:

K= [4, 13, or 20].

2.13 SHIELDED ISOLATION TRANSFORMER

Provide self-cooled two winding type transformer with electrical ratings as shown.

Provide copper or aluminum metal shielding between primary and secondary windings.

Provide electro-static winding shield grounded to the transformer case.

2.14 PRODUCT DATA

The following information shall be provided:

1. Manufacturer's verification that the unit has been built and tested in accordance with the specified ANSI standards.

2. Manufacturer's verification of the sound levels, if different from the specified NEMA ST20 standards.

3. Applicable operation and maintenance information as specified.

4. Manufacturer's product literature.

PART 3--EXECUTION

3.01 GENERAL

Bond transformer enclosures and neutrals together and connect to the ground grid.

3.02 INSTALLATION

Install transformers on walls or floors at locations shown on the Drawings. Install floor mounted transformers on raised concrete bases. Provide sufficient access and working space for ready and safe operation and maintenance.

Mount transformers so that vibrations are not transmitted to the structural parts of the building or to other equipment. Make connections to transformers with flexible conduit.

Adjust tap settings to provide proper voltage at panelboards.

Ground transformer in conformance with the National Electrical Code.

3.03 TESTING

Transformers shall be tested in accordance with Section 26 00 30 – Electrical Acceptance Testing.

**END OF SECTION*

SECTION 26 04 70

LIGHTING AND POWER DISTRIBUTION PANELBOARDS

PART 1--GENERAL

1.01 DESCRIPTION

Three phase, four wire 208Y/120 or 480Y/277 volt, dead front, circuit breaker type panelboard with current rating of 600-amperes or less.

Single phase, three wire 120/240 volt, dead front, circuit breaker type panelboards with current rating of 400-amperes or less.

[Provide metal oxide varistor (MOV) surge protective device (SPD) integral within each panelboard that indicates the status and condition of the SPD, tested per NEMA LS-1, rated IEEE C3 Combined Wave of 20kV and 10kA with 200kAIC internal fusing and listed / labeled per UL 1449.]

1.02 REFERENCES

This section contains references to the following documents. They are a part of this section as specified and modified. In the event of conflict between the requirements of this section and those of the listed documents, the requirements of this section shall prevail.

Reference	Title
IEEE	Institute of Electrical and Electronic Engineers
NEMA	National Electrical Manufacturing Association
NFPA 70	National Electrical Code (NEC)
UL 50	Cabinets and Boxes
UL 67	Underwriters Laboratories, Electric Panelboards
UL 489	Molded-Case Circuit Breakers and Circuit Breaker Enclosures
UL 1449	Surge Suppression Devices

PART 2--PRODUCTS

2.01 MANUFACTURERS

Arizona Water Company and the Construction Manager believe the following candidate manufacturers are capable of producing equipment and/or products that will satisfy the requirements of this Section. This statement, however, shall not be construed as an endorsement of a particular manufacturer's products, nor shall it be construed that named manufacturers' standard equipment or products will comply with the requirements of this Section. Candidate manufacturers include:

A. Eaton / Cutler-Hammer: PRL1a and PRL3a Clipper Power Visor Surge Protective Device series

B. Square D: NQOD and NF with internal Surge Protective Devices

2.02 ARRANGEMENT AND CONSTRUCTION

The front of the panel shall have concealed trim clamps and hinges. The locks shall be flush with cylinder tumbler-type with spring loaded door pulls. The fronts shall not be removable with doors in the locked position. Panelboard locks shall be keyed alike.

Gutter space shall be provided on all sides of the breaker assembly to neatly connect and arrange incoming wiring.

Panelboard shall be composed of individually mounted circuit breakers designed to be removable without disturbing other breakers.

A directory holder with clear plastic plate and metal frame shall be mounted on the inside of the door.

2.03 BUS

Bus shall be tin-plated copper and shall have current ratings as shown on the panelboard schedules, sized in accordance with UL 67. Ratings shall be determined by temperature rise test.

The minimum bus size shall be 100 amperes. Panel fault withstand rating shall be not less than the interrupting rating of the smallest circuit breaker in the panel. Series rating is prohibited.

Panelboards shall be provided with a separate ground bus and, where specified, with a full capacity neutral bus. The neutral bus shall be mounted on insulated stand-offs.

2.04 CIRCUIT BREAKERS

Circuit breakers shall be molded-case type provided for the current ratings and pole configurations specified on the panelboard schedule. Circuit breakers shall be bolt-on type. Circuit breakers shall be listed in accordance with UL 489 for the service specified. Load terminals of circuit breakers shall be solderless connectors.

Circuit breakers rated 120/208 volt and 120/240 volt alternating current shall have a minimum interrupting current rating of 18,000 amperes symmetrical at 240 volt AC.

Circuit breakers rated 277/480 volt alternating current shall have a minimum interrupting current rating of 25,000 amperes symmetrical at 480 volt or as specified on the panelboard schedule.

Provide circuit breakers with special features such as ground fault interrupting (GFI), heating air conditioning and refrigeration (HACR) rating, or locking capability as shown on the Drawings or Schedules.

2.05 FINISH

Panelboard cabinet shall be fabricated from hot-dip galvanized steel in accordance with UL 50. Panelboard fronts shall have a gray, baked enamel finish.

2.06 NAMEPLATES

Nameplates shall be provided in accordance with the requirements of Section 26 00 00.

2.07 PRODUCT DATA

The following information shall be provided:

1. Manufacturer's certification that bus bracing is capable of withstanding the specified short circuit condition.

2. Operation and maintenance information as specified.

3. Quantity and rating of circuit breakers provided with each panelboard.

PART 3--EXECUTION

3.01 GENERAL

The Contractor shall type in the circuit description on the circuit directory as shown on the final record drawings or panelboard schedule.

Provide “Circuit Directory and Circuit Identification” in accordance with NEC 408.4. Each circuit shall be of sufficient detail to allow each circuit to be distinguished from other circuits. Circuit identification shall include load location and provide equipment or instrument Tag Number and Tag Description, where shown on the drawings.

3.02 TESTING

Panelboards shall be tested for proper operation and function.

END OF SECTION

SECTION 26 05 00

LUMINAIRES

PART 1--GENERAL

1.01 DESCRIPTION

This section specifies luminaries (lighting fixtures) features and installation.

1.02 REFERENCES

This section contains references to the following documents. They are a part of this section as specified and modified. In the event of conflict between the requirements of this section and those of the listed documents, the requirements of this section shall prevail.

Reference	Title
NFPA 70	National Electrical Code (NEC)

1.03 WARRANTY

A. EMERGENCY LIGHTING UNIT BATTERIES WARRANTY:

Manufacturer's standard form in which manufacturer of battery-powered emergency lighting unit agrees to repair or replace components of rechargeable batteries that fail in materials or workmanship within specified warranty period: [Two] [Three] years from date of Substantial Completion. Provide full warranty for first year and prorated warranty for the remaining warranty period.

B. FLUORESCENT BALLASTS WARRANTY:

Manufacturer's standard form in which ballast manufacturer agrees to repair or replace ballasts that fail in materials or workmanship within specified warranty period for Electronic or Electromagnetic Ballasts: [Two] [Three] years from date of Substantial Completion.

C. T8 FLUORESCENT LAMPS WARRANTY:

Manufacturer's standard form, made out to Owner, and signed by lamp manufacturer agreeing to replace lamps that fail in materials or workmanship, f.o.b. the nearest shipping point to Project site, within specified warranty period: [Two] [Three] years from date of Substantial Completion.

PART 2--PRODUCTS

2.01 LIGHTING MATERIALS

Lighting materials, including luminaries, lamps, accessories, and hardware, shall conform to the detailed requirements specified herein.

2.02 INTERIOR LUMINAIRES AND COMPONENTS

A. Incandescent, Fluorescent and HID Fixtures: Comply with UL 1598.

B. Sheet Metal Components: Steel, unless otherwise indicated. Formed and supported to prevent warping and sagging.

C. Doors, Frames, and Other Internal Access: Smooth operating, free of light leakage under operating conditions, and designed to permit relamping without use of tools. Designed to prevent doors, frames, lenses, diffusers, and other components from falling accidentally during relamping and when secured in operating position.

D. Diffusers, Covers, and Globes:

1. Acrylic Lighting Diffusers and Other Products: Provide 100 percent virgin acrylic plastic with high resistance to yellowing and physical changes due to aging, exposure to heat and UV radiation.

a. Lens Thickness: At least 0.125 inch minimum.
b. UV stabilized.

2. Glass Lighting Diffusers and Other Products: Provide annealed crystal glass, unless otherwise indicated.

2.03 EXTERIOR LUMINAIRES

Complying with UL 1598 and listed for installation in wet locations.

A. SHEET METAL COMPONENTS:

Corrosion-resistant aluminum, unless otherwise indicated. Formed and supported to prevent warping and sagging.

B. HOUSINGS:

Housings shall not warp, sag, or deform in use and shall be rigidly formed, weather- and light-tight enclosures. Provide filter/breather for enclosed luminaries.

C. DOORS, FRAMES, AND INTERNAL ACCESS:

Smooth operating, free of light leakage under operating conditions, and designed to permit relamping without use of tools. Designed to prevent doors, frames, lenses, diffusers, and other components from falling accidentally during relamping and when secured in operating position. Removable doors for cleaning or replacing lenses. Designed to disconnect ballast when door opens.

D. EXPOSED HARDWARE MATERIAL:

Stainless steel.

E. PLASTIC PARTS:

High resistance to yellowing and physical changes due to aging, exposure to heat, and UV radiation.

F. LENSES AND REFRACTORS GASKETS:

Provide heat-resistant and aging-resistant resilient gaskets to seal and cushion lenses and refractors in luminary doors.

2.04 FLUORESCENT ELECTRONIC BALLASTS

Ballasts for F32T8 lamps shall be:

1. High frequency solid state electronic.

2. Instant start, parallel operation.

3. Minimum starting temperature: 50 F.

4. Minimum 0.87 ballast factor.

5. Maximum total harmonic distortion (THD): 10%.

6. Power factor: 95% minimum.

7. Sound rated: A.

8. Ballast case temperature not to exceed 90 degrees Centigrade during normal operation in 30 degrees Centigrade ambient temperature.

9. Certified Ballast Manufacturers' Certification.

Built-in self-resetting thermal actuated device shall remove ballast from line when excessive ballast temperature is reached. UL Class P, CBM certified 100% output.

The conductors between ballasts and lamp holders shall have 1,000 volts insulation includes conductors to and from remote ballasts.

Manufacturers: Advance, MagneTek, Motorola, or equal.

2.05 HIGH-INTENSITY-DISCHARGE LAMP BALLASTS

Comply with NEMA C82.4 and UL 1029. Shall include the following features, unless otherwise indicated.

1. Type: Constant-wattage autotransformer or regulating high-power-factor type.

2. Minimum Starting Temperature: Minus 22 deg F (Minus 30 deg C) for single-lamp ballasts.

3. Normal Ambient Operating Temperature: 104 deg F (40 deg C).

4. Open-circuit operation: Shall not reduce average life.

5. Ballast Fuses: One fuse in each ungrounded power supply conductor, size per manufacturer recommendations.

A. INSTANT-ON QUARTZ SYSTEM:

Automatically switches quartz lamp on when fixture is initially energized and when momentary power outages occur. Automatically turns quartz lamp off when high-intensity-discharge lamp reaches approximately 60 percent light output.

B. LOW-NOISE BALLASTS:

Epoxy-encapsulated models designed to minimize audible fixture noise.

C. HIGH-PRESSURE-SODIUM BALLASTS:

Solid-state igniter/starter with an average life in pulsing mode of 10,000 hours at an igniter/starter-case temperature of 90 deg C.

D. METAL HALIDE BALLASTS:

Pulse start ballasts for lamps of 175 watt or for lamps with larger wattage with constant wattage auto transformer with a crest factor of 1.8 maximum. Provide regulated lag ballast with a crest factor or 1.5 with long life requirements.

2.06 EXIT SIGNS

Comply with UL 924 for sign colors and lettering size.

2.07 EMERGENCY LIGHTING UNITS

A. GENERAL:

Self-contained units complying with UL 924 with the following features:

1. Battery: Sealed, maintenance-free, with minimum 10-year nominal life.

2. Charger: Fully automatic, solid-state type with sealed transfer relay.

3. Wire Guard: Where specified or scheduled, heavy-chrome-plated wire guard.

4. Integral Time-Delay Relay: Holds unit on for fixed interval when power is restored after an outage; permits high-intensity-discharge lamps to restrike.

5. Operation: Turns lamp on when circuit voltage drops to 80 percent of nominal voltage. Lamp disconnects from battery when voltage approaches deep-discharge level. Disconnect lamps from battery, battery recharges, and floats on charger when normal voltage is restored.

2.08 EXTERIOR LIGHTING POLES

A. GENERAL:

Provide lighting poles with pole cap and the necessary fixture mounting hardware. Provide light switch and power outlet as shown on the drawings.

B. FIBERGLASS POLE:

Fiberglass pole finish shall be impregnated in the resin. Submit available colors for selection. Color shall be factory standard brown.

Manufacturer: Cem-Tec, W. J. Whatley, or equal.

C. CONCRETE POLE:

Concrete pole finish shall be natural mold concrete grey.

Manufacturer: Centrecon; Union Metal – Marbelite; or equal.

D. STEEL POLE:

[Tapered, Non-Tapered,] [Round, Square,] [Galvanized, Painted] [Color]

2.09 SITE JUNCTION BOXES

Junction boxes for the distribution of outdoor lighting circuits shall be precast concrete and set flush with the ground. Nominal size shall be approximately 10.5 x 17.25 x 12 inches deep. Lid shall be cast iron with cast inscription: "LIGHTING".

Boxes manufacture: Brooks Products, Christy Concrete Products, Forni Corporation, Utility Vault Company or equal. Example: Brooks catalog No. 3-1/2PB.

2.10 FIXTURE FINISHES

Manufacturer standard unless scheduled or shown.

1. Paint Finish: Applied over corrosion-resistant treatment or primer, free of defects.

2. Metallic Finish: Corrosion resistant.

2.11 PHOTOELECTRIC RELAYS

A. PHOTO-CELLS:

1. Provide UL 773 or UL 773A listed units. Factory mount units to the luminaries.

2. Provide time-delay relays that fail in the on-position, factory set to turn light unit on at 1.5 to 3 foot candles (16 to 32 lux) and off at 4.5 to 10 foot candles (48 to 108 lux) with 15-second minimum time delay. Provide directional lens in front of photocell to prevent fixed light sources to cause turnoff.

3. Provide a cadmium sulfide cell housed in a plug receptacle assembly, three-prong, polarized, locking type. Provide assembly for outdoor mounting and rated for 1800 VA at 120V maximum capacity.

a. Relay with locking-type receptacle shall comply with NEMA C136.10.

b. Adjustable window slide for adjusting on-off set points.

2.12 PRODUCT DATA

The following information shall be provided:

1. Operation and maintenance items as specified.

2. Polar plots on 8-1/2 x 11 inch paper providing candlepower vs. angle and foot-lamberts (brightness) vs. angle for longitudinal and transverse axis.

3. Table of utilization factors for calculation of illumination levels by the zonal cavity method.

4. Catalog information describing fixture make, materials, and dimensions.

5. Manufacturers' warranties as specified in paragraph 26 05 00-1.03.

PART 3--EXECUTION

3.01 GENERAL

The location and type of luminaries, associated poles, fixtures, and receptacles are as shown on the drawings.

Labels and marks, except the UL label, shall be removed from exposed parts of the fixtures. Fixtures shall be cleaned when the project is ready for acceptance. Photoelectric cells shall be oriented toward the north.

Raceways, wire, or cable shall be provided in accordance with Division 26. Raceways and wire shall be provided from the fixtures, switches and receptacles to the lighting panel in accordance with the NEC. Underground and outdoor wire splices shall be in accordance with Section 26 01 20.

Fixtures labeled to require conductors with a temperature rating exceeding 75 degrees C shall be spliced to circuit conductors in a separately mounted junction box. Fixture wire shall meet UL and NEC requirements. Fixture shall be connected to junction box using flexible conduit with a temperature rating equal to that of the fixture.

Fixtures shall be aligned and directed to illuminate an area as specified. Fixtures shall be directly and rigidly mounted on their supporting structures. The conduit system shall not be used to support fixtures.

Fixture supports that are welded to steel members shall be treated with rust-resistant primer and finish paint where brackets or supports for lighting fixtures.

Provide manufacturer recommended mounting hardware and brackets.

3.02 WIRE CONNECTIONS

Tighten electrical connectors and terminals according to manufacturer's published torque-tightening values or use torque values specified in UL 486A and UL 486B.

3.03 FIELD QUALITY CONTROL

Inspect each installed fixture for damage then replace damaged fixtures and components. Verify normal operation of each fixture after installation.

Test for Emergency Lighting: Interrupt power supply to demonstrate proper operation. Verify normal transfer to battery power source and retransfer to normal.

Prepare a written report of tests, inspections, observations, and verifications indicating and interpreting results. Retest to demonstrate compliance with specification requirements where adjustments are made. Replace fixtures with damage or corrosion during warranty period.

3.04 LIGHTING FIXTURE SPECIFICATION

Family group: Exit Sign

Description:	LED, self-diagnostic, dual-voltage emergency sign . Green letters and directional arrows.
Construction:	Housing: Molded black ABS. Stencil faceplate: Opaque 1/8-inch thick high-impact ABS, with stencil-cut letters 6 inches high and 3/4-inch stroke.
Lighting:	Signs shall meet UL visibility requirements. Effective life shall be listed as 10 years minimum. Initial brightness shall average 330 microlamberts (Scotopic). Sign shall be visible at 225 feet, legible at 140 feet. Diffusion panel: 1/8-inch thick acrylic, non-reflective matte surface.
Lamps:	LED.
Directional arrows:	Universal directional arrows--left, right, or both, adjusted as shown.
Electrical:	120/277 Dual voltage
Mounting:	Surface ceiling or wall mounting--see symbols. Provide hardware and canopies as required for back, ceiling, or end wall mounting.

Special: Mounting height: +80”-+96”AFF. Provide pendant mounts where necessary

Acceptable products:	Lithonia Quantum type, Dual-Lite SLX-60 series or equivalent.

3.04 LIGHTING FIXTURE SPECIFICATION

Family group:	Fluorescent, Corrosion-resistant
Group description:	Industrial indoor, enclosed, surface and pendent, waterproof and chemical-resistant. Nominal 1 foot wide by 4 feet long.
Family members:	FCl: Two 32-watt energy-saving T-8 lamps. FC2: Two 32-watt standard T-8 lamps. Pendent mounted from 1/2 inch RSC threaded stems. Outlet boxes for pendants shall be cast metal with threaded conduit entries. Ball aligners shall be provided. FC-EM: Same as FCl, plus integral emergency power supply.
Construction:	Housing: Nonmetallic housing, injection-molded, high-impact thermoplastic. Finish: Any interior metallic parts shall be stainless steel or zinc-phosphated steel painted with powder-coat white epoxy finish. Gasketing: Between housing and diffuser.
Lighting:	Distribution: General downward. Lens: Impact-resistant patterned acrylic diffuser.
Lamps:	3,500K T-8
Electrical:	Input voltage: [120] [277] Ballasts: (Per Section 26 05 00).
Mounting:	Surface or pendant stems.

Special: UL Damp Location label.

Acceptable products:	RAL NMF type, Columbia LUN series, Holophane HES series or equivalent.

3.04 LIGHTING FIXTURE SPECIFICATION

Family group:	Fluorescent, Hazardous location
Group description:	2-lamp wide fluorescent, nominal 1 foot wide by 4 feet long.
Family members:	
FHl:	Class I, Division 1, explosion-proof. Materials: Copper-free aluminum (0.4 percent) hood, housing, and reflector. Lens: Impact- and heat-resistant clear glass lamp protectors.

Finish: Gray epoxy hood, housing and reflector exterior. White baked enamel reflector interior.
Mounting: Wall. Provided with wall mounting brackets for 45 degree angle mounting. RAL Catalog No. XP265-4-2L-A, or equivalent.

FH2: Same as Type FH3, except pendant mounting.

FH3: Class I, Division 2, enclosed and gasketed, vaportight.
Materials: 20-gage steel reflector housing, 14 -gage steel door frame, die-cast aluminum suspension hubs, white urea plastic lamp holders.
Lens: 3/16-inch clear tempered glass.
Finish: White plasticized reflector housing inside and out.
Mounting: Pendant. RAL Catalog No. HEF265-4-2L-TM-A or equivalent.

FHE____: Same as Type FH3, plus integral emergency power supply.

Lamps: 3,500K T8

Electrical: Input voltage: [120] [277]

Ballasts: (Per Section 26 05 00).

Acceptable products: RAL (see above); LDPI 380 series (FH); Guth Codetite series (FH3); or equivalent.

3.04 LIGHTING FIXTURE SPECIFICATION

Family group: Fluorescent, Industrial

Group description: Bare lamp industrial with downlight reflector. Indoor use, nominal 1 foot wide by 4 feet long. Surface and pendent mounted.

Family members: FIl: 2 lamps wide, 4 foot length.
FI2: 2 lamps wide, 8 foot length (4 lamps).
FIE: Same as Type FIl, plus integral emergency power supply.

Construction: Housing: Die-formed code gage steel housing.
Finish: White, dry polyester powder finish over phosphate pretreatment.

Lighting Distribution: General downlight.
Reflector: Apertured, with 10 percent uplight.
Accessories: [None] [Wireguard] [Chain Kit,]

Lamps:	3,500K T8
Electrical:	Input voltage: [120] [277] Ballasts: (Per Section 26 05 00).
Mounting:	Surface : Ceiling or unistrut with 1/2-inch RSC threaded stems. Suspended: Factory chains or threaded conduit entries with ball aligners.
Acceptable products:	Lithonia-LA series; Holophane HSM Series; Columbia CSR series; or equivalent.

3.04 LIGHTING FIXTURE SPECIFICATION

Family Group:	Fluorescent, Wrap-around
Group Description:	Surface and pendant fluorescent, wraparound lens.
Family members:	FPl: 2-4' lamps, nominal 6" wide by 4 foot size. FP2: 2-4' lamps, nominal 10" wide by 4 foot size. FP3: 2-4' lamps, nominal 16" wide by 4 foot size. FP4: 2-4' lamps, nominal 16" wide by 4 foot size.
Construction:	Housing: Die-formed code gage steel. Finish: White high gloss baked enamel.
Lighting:	Distribution: General downlight Reflector: Baked white enamel Lens: Flat bottom, refractor low brightness, extruded, 100 percent acrylic prismatic, nominal 0.125 inch thick, linear side prisms, pyramidal bottom prisms.
Lamps:	3,500K T8
Electrical:	Input voltage: [120] [277] Ballasts: (Per Section 26 05 00).
Mounting:	Surface, tight to ceiling. Ceiling: Gypsum board/plaster with flush J-box
Acceptable products:	Lithonia-SC type, Columbia EWN series, Holophane HW- series or equivalent.

3.04 LIGHTING FIXTURE SPECIFICATION

Family Group:	Fluorescent, Striplight
Group Description:	Surface fluorescent bare lamp striplight.
Family members:	FSl: 1 lamp wide, 4 foot long (1 lamp) FS2: 1 lamp wide, 8 foot long (2 lamps) FS3: 2 lamps wide, 4 foot long (2 lamps) FS4: 1 lamp wide, 8 foot long (4 lamps)
Construction:	Housing: Die-formed code gage steel channel. Finish: White high gloss baked enamel.
Lighting:	Distribution: General Reflector: None--channel only Lens: None Accessories: [None, Wireguard, Chain Kit,]
Lamps:	3,500K T8
Electrical:	Input voltage: [120] [277] Ballasts: (Per Section 26 05 00).
Mounting:	Surface : Ceiling or uni-strut with 1/2-inch RSC threaded stems. Suspended: Factory chains or threaded conduit entries with ball aligners.
Acceptable products:	Lithonia C type, Holophane HSM series, Columbia CS series or equivalent.

3.04 LIGHTING FIXTURE SPECIFICATION

Family group:	Incandescent, Emergency
Group description:	Battery-powered emergency lighting unit. Resistant. 90-minute minimum light from integral batteries.
Family members:	IEl: Power unit with batteries, power supply and charger and two lighting heads mounted on top. IE2 Single remote head and single head mounting plate. IE3: Double remote head and double head mounting plate.

Lighting:	Distribution: Adjustable light heads.
Lamps:	5.4 watt, 12 volt sealed-beam krypton, one per head.
Electrical:	Input voltage: 120/277. Integral 12 volt transformer and battery charger.
Mounting:	Power unit wall mounted in custom angle iron bracket assumbly with bottom at +7-1/2 feet.
Acceptable products:	Lithonia ELM2 series; Dual-Lite EDC/SRH series; Holophane Navigator series; or equivalent.

3.04 LIGHTING FIXTURE SPECIFICATION

Family group:	Incandescent, Emergency/Exit
Group description:	Battery-powered combination emergency/exit lighting unit. Resistant. 90-minute minimum light from integral batteries.
Lighting:	Distribution: Adjustable light heads.
Lamps:	5.4 watt, 12 volt sealed-beam krypton, one per head.
Electrical:	Input voltage: 120/277. Integral 12 volt transformer and battery charger.
Mounting:	Power unit wall mounted in custom angle iron bracket assembly with bottom at +7-1/2 feet.
Acceptable products:	Lithonia HQM type, Highlite 'P' series, Dual-Lite HLE series or equivalent.

3.04 LIGHTING FIXTURE SPECIFICATION

Family group:	HID, Corrosion-resistant
Group description:	Enclosed and gasketed industrial fixture for highly corrosive and hazardous areas. Pendant and wall bracket installations.
Family members:	HC1: Surface ceiling mount. Cast housing base with threaded conduit entries and lugs for mounting anchors. Corrosion-resistant enclosed and gasketed. HC2: Same as HCl, except wall bracket mounting.

HCE: Same as HCl, plus incandescent quartz lamp that will automatically light for emergency standby.

Construction: Housing: Cast aluminum.
Finish: Polyester powder paint suitable for severe corrosive environments.

Lighting: Distribution: General downward.
Reflector: Symmetrical, patterned borosilicate glass. 1/8-inch minimum wall thickness.
Shielding: Full-cutoff (Wall mounted only).

Lamps: High pressure sodium: 1,900K, CRI 22 (minimum), wattage as scheduled, burning position per manufacturer. .
Metal Halide: 4,000K, CRI 70 (minimum), wattage as scheduled, burning position per manufacturer.

Electrical: Input voltage: [120] [208] [277] [480]
Ballast: See Section 26 05 00.

Mounting: Surface mount, with threaded conduit entries.

Special: All screws shall be stainless steel and captive. Special plant fiber gasketing shall be provided mechanically held in place.

Acceptable products: RAL SAF series; Holophane Petrolux series; Hubbell Kemlux III series; or equivalent.

3.04 LIGHTING FIXTURE SPECIFICATION

Family group: HID Downlight

Group description: Exterior HPS cylinder downlights. Nominal 6 inch round, 12-inch high cylinder.

Family members: HDl: One [xx]-watt lamp.
Mounting: Wall bracket.
Catalog No.: NRG-221.

HD2: One [xx]-watt lamp.
Mounting: Surface ceiling.
Catalog No.: NRG-231.

Construction: Housing: Extruded aluminum.
Finish: [xxx].

Lighting Distribution: Downward cone, strict cutoff.

Reflector: Polished parabolic.

Lamps: High pressure sodium: 1,900K, CRI 22 (minimum), wattage as scheduled, burning position per manufacturer. .
Metal Halide: 4,000K, CRI 70 (minimum), wattage as scheduled, burning position per manufacturer. .

Electrical: Input voltage: [120] [208] [277] [480]
Ballasts: High power factor for 0 degree F starting.

Mounting: Wall: Surface mounted bracket
Ceiling: [surface, solid pendant, cord with strain relief]

Acceptable products: Gotham CC series; Prescolite LFHL series; or equivalent.

3.04 LIGHTING FIXTURE SPECIFICATION

Family group: HID, Floodlight

Group description: Exterior pole-mounted adjustable floodlights, two per pole. Extended and gasketed.

Construction: Housing: Cast aluminum.
Finish: Brown baked enamel finish.

Lighting Distribution: Controlled flood beam.
Reflector: One-piece hydro-formed, polished aluminum, parabolic shape.
Shielding: Full-cut-off.

Lamps: High pressure sodium: 1,900K, CRI 22 (minimum), wattage as scheduled, burning position per manufacturer. .
Metal Halide: 4,000K, CRI 70 (minimum), wattage as scheduled, burning position per manufacturer.

Electrical: Input voltage: [120] [208] [277] [480]
Ballasts: High power factor rated at -40°C operation.

Mounting: Pole: Tapered, round, pre-cast spun concrete, with hollow raceway core, for direct bury in earth. 16 foot 4 inch mounting height above finished grade. Concrete aggregate and finish shall be Sonora Gold. Provide pole cap, twin fixture mount, and all necessary mounting hardware.

Special: Integral photocell at each pole. Provide flush, ground junction box at each pole.

Acceptable products:	Lithonia TFA type; Holophane Preditor series; Kim AFL series; or equivalent.

3.04 LIGHTING FIXTURE SPECIFICATION

Family group:	HID Hazardous location
Group description:	Class I, Division 2, explosion-proof industrial fixture for corrosive and hazardous areas.
Family members:	HH1: Ceiling/surface mounted HH2: Pendant mounted from 3/4 inch RSC threaded stems. Outlet boxes for pendants shall be cast metal with threaded conduit entries. Ball aligners shall be provided
Construction:	Housing: Cast aluminum. Finish: Polyester powder paint suitable for severe corrosive environments.
Lighting:	Distribution: General downward. Reflector: Symmetrical, patterned borosilicate glass. 1/8 inch minimum wall thickness. Shielding: Enclosed and gasketed optical assembly.
Lamps:	High pressure sodium: 1,900K, CRI 22 (minimum), wattage as scheduled, burning position per manufacturer. . Metal Halide: 4,000K, CRI 70 (minimum), wattage as scheduled, burning position per manufacturer.
Electrical:	Input voltage: [120] [208] [277] [480] Ballast: See Section 26 05 00.
Mounting:	Surface mount, with threaded conduit entries.

Special: All screws shall be stainless steel and captive. Special plant fiber gasketing shall be provided mechanically held in place.

Acceptable products:	RAL SAF series; Holophane Petrolux series; or equivalent.

3.04 LIGHTING FIXTURE SPECIFICATION

Family group:	HID Pole-mounted
Group description:	Exterior pole-mounted area light.
Family members:	HPl: One 100 watt lamp. HP2: Same as HPl, plus receptacle. HP3: Same as HPl, plus integral photocell.
Construction:	Housing: Cast aluminum housing and hooded top. Finish: Natural anodized finish.
Lighting:	Distribution: Controlled downlight, IES Type V symmetrical. Shielding: Full cut-off.
Lamps:	High pressure sodium: 1,900K, CRI 22 (minimum), wattage as scheduled, burning position per manufacturer. . Metal Halide: 4,000K, CRI 70 (minimum), wattage as scheduled, burning position per manufacturer.
Electrical:	Input voltage: [120] [208] [277] [480] Ballasts: -20 degree F operation.
Mounting:	Pole, 12-foot mounting height, straight, 4-inch OD round steel pole. See paragraph 26 05 00-2.04. Finish to match fixture. Provide anchor bolts, template, form, and reinforcing. Install anchor bolts in concrete structure prior to pour.
Special:	120 volt receptacle at base, where shown.
Acceptable products:	Lithonia KAD series; Holophane Crestwood CW Series; Hubbell Cimarron series or equivalent.

3.04 LIGHTING FIXTURE SPECIFICATION

Family group:	HID Wall-pack
Group description:	Exterior wall bracket area light.
Family members:	HWl: One xx-watt lamp. HW2: Same as HWl plus integral photocell.
Construction:	Housing: Cast aluminum Finish: Bronze

Lighting:	Distribution: Widespread area distribution. Shielding: Full cut-off.
Lamps:	High pressure sodium: 1,900K, CRI 22 (minimum), wattage as scheduled, burning position per manufacturer. . Metal Halide: 4,000K, CRI 70 (minimum), wattage as scheduled, burning position per manufacturer.
Electrical:	Input voltage: [120] [208] [277] [480] Ballasts: High power factor premium ballast for -40° C operation.
Mounting:	Surface wall mounting over a cast box in concrete or concrete block wall, with gasketing between box and fixture.
Acceptable products:	Lithonia TWA type; Holophane Wallpack II Series; Hubbell PVL series or equivalent.

END OF SECTION

SECTION 26 07 54

480 VOLT SERVICE ENTRANCE SECTION

PART 1--GENERAL

1.01 DESCRIPTION

This section specifies outdoor rated, 480Vac, four-wire, Service Entrance Section (SES) with [(name of utility)] power utility metering equipment and main disconnecting means as shown on the drawings.

The SES shall consist of the following:

1. Enclosure Section-1: Power utility metering compartment that meets the [EUSERC] or [_____] standards in an outdoor NEMA-3R, non-walk-in enclosure.

2. Enclosure Section-2:
   [a. Includes the fixed insulated-case power circuit breaker with solid state trip "Main" circuit breaker]

   [a. Manual operated spring assist power interrupting air switches with fuses]
   [b. Ground fault interrupting system initially set to the maximum setting]

   [c. Transient voltage surge suppresser (TVSS)]

1.02 QUALITY ASSURANCE

A. REFERENCES:

This section contains references to the following documents. They are a part of this section as specified and modified. In the event of conflict between the requirements of this section and those of the listed documents, the requirements of this section shall prevail.

Reference	Title
ANSI/IEEE	Definitions and Requirements for 600 Volt Air Switches, Insulators, and Bus Supports
ANSI C37.46	Specifications for Power Fuses and Fused Disconnecting
ANSI C37.47	Specifications for Distribution Fuse Disconnecting Switches, Fuse Supports, and Current-Limiting Fuses
NEMA PB 2	Deadfront Distribution Switchboards
UL 489	Underwriters Laboratory – Molded-Case Circuit Breakers, Molded-Case Switches, and Circuit-Breaker Enclosures
UL 891	Underwriters Laboratory - Deadfront Switchboards

Reference	Title
UL 943	Underwriters Laboratory – Ground-Fault Circuit-Interrupters
UL 977	Underwriters Laboratory – Fused Power-Circuit Devices
UL 1066	Underwriters Laboratory – Low Voltage AC and DC Breakers used in Enclosures

B. FACTORY TESTS:

Switchboards shall be tested for operation at the specified voltage and current ratings after assembly. The main circuits shall be given a dielectric test of 2200 volts for 1 minute between live parts and ground, and between opposite polarities. The wiring and control circuits shall be given a dielectric test of 1500 volts for 1 minute between live parts and ground.

Instrument transformers shall have ratio and phase angle tests made in conformance with ANSI C57.13.

1.03 SUBMITTALS

A. The following information shall be submitted. The submittal shall contain a cover sheet, indexed by item, and cross-referenced to the appropriate specification paragraph, and be organized in the following order:

1. A copy of this specification section, with addendum updates included, and all referenced and applicable sections, with addendum updates included, with each paragraph check-marked to indicate specification compliance or marked to indicate requested deviations from specification requirements.

   A <u>check mark</u> shall denote full compliance with a paragraph as a whole. If deviations from the specifications are indicated, and therefore requested by the Contractor, each deviation shall be underlined and denoted by a number in the margin to the right of the identified paragraph, referenced to a detailed written explanation of the reasons for requesting the deviation.

   The Construction Manager, Arizona Water Company, shall be the final authority for determining acceptability of requested deviations. The remaining portions of the paragraph not underlined will signify compliance on the part of the Contractor with the specifications.

   Failure to include a copy of the marked-up specification sections, along with justification(s) for any requested deviations to the specification requirements, with the submittal shall be sufficient cause for rejection of the entire submittal with no further consideration.

2. A copy of the contract document single line diagrams, plan drawing showing SES location, and SES elevation relating to the submitted equipment, with addendum updates that apply to the equipment in this section, marked to show specific changes necessary for the equipment proposed in the submittal. If no changes are required, the drawing or drawings shall be marked *"no changes required"*.

Failure to include copies of the relevant drawings with the submittal shall be cause for rejection of the entire submittal with no further review.

3. A copy of Specification Sections with addendum updates included, with each paragraph check-marked to indicate specification compliance. *Failure to include copies of the marked-up specification sections with the submittal shall be cause for rejection of the entire submittal with no further review.*

4. Electrical single line, schematic diagrams, and conductor connection diagram.

5. Layout drawings indicating arrangement, dimensions, cable entries, and weights.

6. Manufacturer's product and catalog data indicating equipment specifications and features including interrupting, withstand, and continuous current ratings of all relevant equipment and components. Catalog data shall be edited or "arrowhead" to indicate only the models and options to be provided as part of this specification.

7. Manufacturer's procedure for ground-fault performance test.

B. The SES submittal information shall also be submitted to Power Utility Metering Department for their approval.

C. After Power Utility approval, submit one approved copy with Utility comments to the Engineer.

1.04 PROJECT / SITE CONDITIONS

The equipment shall be designed and manufactured to meet the specified requirements of the environmental and seismic conditions for the Project location.

PART 2--PRODUCTS

2.01 MANUFACTURERS

Manufacturers include:

1. Eaton Cutler-Hammer
2. Square D Company

2.02 SERVICE ENTRANCE SECTION

A. GENERAL:

Coordinate with Power Utility for the correct meter socket, test devices, potential transformers, current transformers, and other items installed in the metering section. Refer to Power Utility Electric Service Requirements, latest edition.

Equipment and materials shall be new and free from defects.

Continuous Current Ratings: [As shown] [600] [800] [1200] [2600] [2000] [2500] [3000] [4000] [amperes] at 600Vac.

B. POWER DISCONNECT – FUSED SWITCH DEVICE TYPE:

The high-pressure contact-switch shall provide a stored energy operating mechanism, Class-L fuse coordination for 200,000-ampere root mean squared (rms) interruption and isolation, and self-powered ground-fault protection with time and current field adjustments.

The following components shall be provided:

1. Emergency switch-open button that triggers the stored energy operating mechanism with positive "On-Off" indication and with an entrance door - power disconnect switch safety interlock.

[2. Electric trip for remote control or for ground-fault protection].

[3. Blown Fuse-Protection: Provide single-phase protection when only one fuse is blown].

[4. Test Buttons:

[a. No-trip Ground Fault Test Button: Permits ground fault test without tripping the SES switch].
[b. Test Button: Simulates ground-fault occurrence and trips the SES switch].
[c. Provide an external 120Vac control power source for test function].

B. POWER DISCONNECT - CIRCUIT BREAKER TYPE:

The circuit breaker with adjustable solid-state trip with sizes as indicated. The circuit breaker settings shall be confirmed with a protective device coordination study provided by others.

1. GENERAL: Circuit breakers shall be stored energy type mechanism to provide quick-make, quick-break, trip-free operation:

a. Insulated case UL listed 100 percent continuous current capacity.
b. Ground fault protection shall be provided as specified or indicated.

Circuit breakers shall provide manual switching operation by means of a low-torque handle or pushbutton on the front of the unit. Automatic operation during overload and short circuit conditions shall be provided by solid state or thermal magnetic tripping devices located in the circuit breaker frame as specified on the drawings.

Circuit breakers shall be front accessible, stationary, individually mounted, and shall have short circuit capabilities equal to or greater than the system in which they are installed. Unless otherwise noted, circuit breakers shall have a minimum interrupting current of 65,000 amperes symmetrical RMS at 480 Vac.

2. STATIC TRIPPING DEVICES: Solid state static tripping devices shall consist of current sensors, logic assembly, magnetic latch release, and required interconnecting wiring. Tripping devices shall be automatic and self-contained within the breaker frame and shall not require any external relaying or power supplies.
Tripping functions shall be field adjustable and contain the following tripping characteristics:

a. Overload tripping:

1) Adjustable ampere setting
2) Adjustable long-time delay

b. Short circuit tripping:

1) Adjustable short-time pickup
2) Adjustable short-time delay
3) Adjustable instantaneous pickup

c. Ground fault tripping:

1) Adjustable ground fault pickup
2) Adjustable ground fault delay

C. POWER BUS:

The bus shall be insulated tin-plated copper bus bar. Unless otherwise specified, buses shall be braced to withstand short circuit stresses up to 65,000 RMS amperes.

D. ENCLOSURE:

The enclosure shall be designed for outdoor installation. Each of the enclosure sections shall have a full-length flanged front door.

The structure supporting current carrying parts shall be flame retardant non-tracking glass polyester or porcelain.

E. SAFETY INTERLOCKING:

The inner door shall be hinged and interlocked with the main circuit breaker or fused switch so that the power disconnecting device opens before internal access is possible and the door must be closed before the power disconnecting device may be closed.

F. LIGHTNING ARRESTOR AND SURGE CAPACITOR:

Provide a lightning arrestor and surge capacitor for 480Vac service entrance sections cabinets:

1. Silicon Oxide Varistor (SOV)
2. Energy Rating: 3000 joules per pole.
3. Time Rating: 5 nanoseconds.
4. Resistors: Prohibited.

5. Manufacture and Models:

   a. Delta LA-603 for 3-phase, 3-wire or equal.
   b. Delta LA-603 for 3-phase, 4-wire or equal.
   c. Delta CA-603 for 3-phase, 3 or 4-wire rated at 650 Vac, or equal.

G. TVSS SURGE DEVICE:

Refer to Section 26 04 45 for additional TVSS requirements. Provide a transient voltage surge suppressor (TVSS) rated at:

1. 480Y/277 Vac
2. 150,000 ampere per phase with 5-nanosecond response time
3. Five-year manufacturer warrantee with UL Label.
4. Features:

   a. Fault monitoring.
   b. Trouble monitoring.
   c. Strike counter.

Manufacturer: Eaton/Cutler Hammer or Square D.

H GROUNDING:

A common ground bus shall extend the entire length of the assembly with ground lugs furnished at each end where multiple enclosures are attached together. A ground lug, sized for a 4/0 bare copper ground wire, shall be bolted to the interior of the enclosure.

I. NEUTRAL:

A neutral bus shall extend the entire length of the assembly with lugs furnished at each end where multiple cabinet enclosures are attached together.

J. FINISH:

The finish shall comply with in accordance with Section 26 00 00.

K. NAMEPLATES:

In addition to the manufacturer's identification, an external nameplate shall be provided with equipment number and name as shown.

Each section compartment shall be provided with nameplates indicating utility meter, main breaker circuit name with equipment number and description of load, pull sections, TVSS, and any additional designations describing the compartment function or usage.

Provide machine engraved laminated white phenolic nameplates with black lettering for panel-mounted equipment with the instrument tag number/description in 3/32-inch minimum size lettering and attach to the panel or enclosure with a minimum of two self-tapping 316 stainless steel screws.

Provide nameplates for power sources indicating the power loads and nameplates for power loads that indicate the power sources, in accordance with these specifications and the NEC.

L. WIRING:

Internal switchboard wiring shall consist of single conductor SIS 90 degree C copper wire and UL listed for panel wiring. The wire shall be sized to suit load requirements. Minimum size shall be No. 14 AWG.

2.03 PRODUCT DATA

The following product data shall be provided:

1. Applicable operation and maintenance information shall be provided in the product submittal, including:

   a. As-built drawings.

   b. Final, complete, reviewed submittal information.

   c. Manufacturer's [Circuit Breaker] [Fused Switch Ground-Fault Trip and Single Phase Protection equipment] instructions.

   d. Manufacturer's TVSS instructions.

2. Results of factory tests conducted.

3. Results of field tests conducted.

[4. Ground-fault protection performance test].

PART 3--EXECUTION

3.01 INSTALLATION AND INSPECTION

Coordinate the SES conduit installation with the power utility and request their inspection of the work prior to covering up the work.

[3.02 PROTECTIVE DEVICE SETTING COORDINATION

Refer to Section 26 04 31 for Short Circuit and Protective Device Coordination Studies and Section 26 00 30 for device setting implementation requirements and Arc Flash labeling requirements].

3.03 PROTECTIVE DEVICE SETTINGS

The power utility metering instrument transformer ratios shall be confirmed with the power utility metering department.

The protective devices shown on the drawings are preliminary and are subject to confirmation with the coordination study in Section 26 04 31.

The ground fault protective device and the fuses or tripping devices shall be adjusted to the settings specified in the protective device coordination study in Section 26 04 31 prior to energizing the SES.

3.04 FIELD TESTING

The SES equipment shall be tested in accordance with Section 26 00 30 – Acceptance Testing. Verify the ground fault setting and trip functions. Perform ground-fault protection performance test per Manufacturer instructions. Provide written successful test results.

END OF SECTION

SECTION 26 09 20

600 VOLT MOTOR CONTROL CENTERS

PART 1--GENERAL

1.01 DESCRIPTION

A. SCOPE:

This section specifies freestanding, factory assembled 600 (480) volt Motor Control Centers (MCC) with digital power monitors to display the voltage and current load parameters.

B. EQUIPMENT LIST:

MCCs specified herein shall be furnished by a single manufacturer.

1.02 QUALITY ASSURANCE

A. REFERENCES:

This section contains references to the following documents. They are a part of this section as specified and modified. In the event of conflict between the requirements of this section and those of the listed documents, the requirements of this section shall prevail.

Reference	Title
ANSI/NEMA ICS 1	Industrial Control Systems: General Requirements
ANSI/NEMA ICS 18	Motor Control Centers
NFPA 79	Electrical Standards for Industrial Machinery
UL 845	Motor Control Centers

B. CODES AND STANDARDS

Motor Control Centers and all components shall be Underwriters Laboratory listed to UL 845 and shall conform to NEMA ICS-1 and ICS-18 standards.

1.03 SUBMITTALS

The following information shall be provided:

1. A copy of this specification section, with addendum updates included, and all referenced and applicable sections, with addendum updates included, with each paragraph check-marked to indicate specification compliance or marked to indicate requested deviations from specification requirements.

A check mark shall denote full compliance with a paragraph as a whole. If deviations from the specifications are indicated, and therefore requested by the Contractor, each deviation shall be underlined and denoted by a number in the margin to the right of the identified paragraph, referenced to a detailed written explanation of the reasons for requesting the deviation.

The Construction Manager, Arizona Water Company, shall be the final authority for determining acceptability of requested deviations. The remaining portions of the paragraph not underlined will signify compliance on the part of the Contractor with the specifications.

Failure to include a copy of the marked-up specification sections, along with justification(s) for any requested deviations to the specification requirements, with the submittal shall be sufficient cause for rejection of the entire submittal with no further consideration.

2. Elementary connection and interconnection diagrams, in accordance with NFPA 79 and/or NEMA ICS 18 Part 1 standards.

3. Time current curves for all protection devices.

4. List of starters and feeder tap compartments indicating the size and type of circuit protection.

5. Interrupting, withstand, and continuous current rating of:

    a. Bus bars
    b. Feeder tap units
    c. Starter units
    d. Main incoming units

6. Nameplate schedule
7. Dimensioned drawings showing conduit access locations
8. Front view elevation with starter and component schedule

PART 2--PRODUCTS

2.01 MANUFACTURERS

Motor Control Centers shall be as manufactured by Cutler Hammer or Square D.

2.02 SERVICE

Motor control centers shall be rated 480 volts, 60 Hertz, 3 phase, 3 wire [(no neutral bus) or 4 wire (neutral bus)] as specified or indicated, suitable for operation at the specified voltages and short circuit capacities.

2.03 STRUCTURE AND CONSTRUCTION

A. STRUCTURE:

Motor control centers shall be made of No. 14 gage steel minimum and, unless otherwise shown, each section shall be 90 inches high by 20 inches wide by 20 inches deep. The individual unit compartments shall be a minimum of [12] [18] inches high.

Each section shall have 72 inches for stacking starter units into the sections. [Size NEMA 1 through 3 FVR and FVNR starter units shall be provided with an additional 6 inches of vertical space.]

The compartments shall have pan-type doors with a minimum of two quarter-turn hold-down latches; and neoprene gaskets.

A full height vertical wireway, 4 inch wide minimum, but not less than 30 square inches in cross section, shall be provided for each vertical motor control center section. The wireway shall contain full height removable doors. Horizontal wireways shall be provided top and bottom, extending the length of motor control centers.

Bottom channel sills shall be mounted front and rear of the vertical sections extending the full length of the motor control center lineup. A removable lifting angle shall be mounted on top and shall extend the width of the motor control center lineup.

B. CONSTRUCTION:

Motor control centers located indoors shall have NEMA 1, gasketed enclosures.

Motor control centers located outdoors shall be NEMA 1 gasketed in a NEMA-3R weatherproof [walk-in] [non-walk-in] enclosure.

Starter units, size 4 and smaller, and feeder tap units less than 225 amperes shall be drawout plug-in construction with hardened, tin-plated copper free-floating stabs, steel spring backups. The door shall have interference tabs which prevent door closure if unit is improperly installed.

Units shall be latched in the position to assure proper bus contact. The unit disconnect device shall be interlocked to prevent removal or reinsertion of a unit when the disconnect is in the "ON" or "TRIPPED" positions.

Fusible switch or circuit breaker disconnect operators shall be capable of accommodating three padlocks for locking in the "OPEN" position.

Hardware for mounting future starter and feeder tap units shall be provided at compartments specified as "FUTURE."

2.04 CONTROL SECTION

[A separate vertical section shall be provided where specified and contain relays or a programmable controller and Operator Interface Station.

The door shall be full height and have a keyed handle with a three-point latch. All control sections shall be keyed alike.]

The control section shall be completely barriered and contain an equipment mounting panel made of 10-gage steel which is supported off the back of the enclosure by mounting studs. The usable depth shall be minimum 17 inches. Width shall be [30] [36] inches, or as specified.

Slotted plastic wire ways shall be provided as required to contain the wiring in a neat appearance.

The control section shall include a 115 Vac utility power receptacle for maintenance and an internal switched fluorescent light and provide a separate 115 Vac branch circuit for the programmable controller as shown on the Drawings

2.05 FINISH AND COLOR

The finish and color shall be manufacturer's standard.

2.06 BUS

A. GENERAL:

Bus shall be tin-plated copper with bolted connections between vertical and horizontal bus bars. Access for tightening these connections shall be from the front, without the need for tools on the rear of the connection. Insulated horizontal and vertical bus barriers shall be provided. Barriers shall be fabricated from high-strength, glass-filled polyester resin.

The bus shall be braced to withstand a fault current of [42,000] [65,000] amperes, RMS, symmetrical.

B. HORIZONTAL BUS:

The main horizontal bus shall be rated a minimum 600 amperes continuous. Refer to the drawings for ratings.

C. VERTICAL BUS:

The vertical bus shall be [insulated and] rated a minimum 300 amperes continuous.

D. NEUTRAL BUS:

Where show or specified, the neutral bus shall be provided and have the same rating as the main horizontal bus.

E. GROUND BUS:

A 1/4-inch by 2-inch ground bus shall be provided the full length of the motor control center. Ground bus shall be located at the bottom of the motor control center. Provide a lug to terminate a bare 4/0 AWG copper ground conductors at each end of the ground bus.

2.07 WIRING

A. GENERAL:

Motor control centers shall be provided with NEMA ICS 18 Class [I] [II], Type [A] [B] [C] wiring. All starter units shall have terminal blocks for control wiring. Terminal blocks shall be provided for power wiring for starters size 2 and smaller.

Motor control centers shall be provided with all necessary interconnecting wiring and inter-locking. [When a MCC control section is specified on the drawings or schedules, wire directly to the relays or programmable controller's input/output modules as part of the interconnecting wiring.]

Provide elementary and connection diagrams for each starter unit and an interconnection diagram for the entire motor control center.

B. POWER WIRE:

Power wire shall be copper 90 degrees C insulated, sized to suit load; minimum power wire size shall be No. 12 AWG copper stranded.

C. CONTROL WIRE:

Control wire shall be No. 16 AWG stranded copper wire, rated 90 degrees C machine tool wiring (MTW) and UL listed for panel wiring.

D. TERMINATIONS AND CABLE CONNECTIONS:

1. TERMINALS: Control wiring shall be lugged with ring-tongue or locking spade crimp type terminals made from electrolytic copper, tin-plated.

2. CABLE CONNECTORS: Cable connectors for use with stranded copper wire, sizes No. 8 AWG to 1000 kCmil shall be UL listed. Dished conical washers shall be used for each bolted connection. Connectors shall be reusable and shall be rated for use with copper conductors. Incoming line and outgoing feeder compartments shall be provided with crimp type lugs, 3M Company, Burndy Company, or equal.

E. CONDUCTOR MARKERS:

Markers used for identification shall meet the requirements of Section 26 00 00.

2.08 MAIN AND FEEDER CIRCUIT PROTECTION

A. GENERAL:

Main and feeder tap units shall consist of fused disconnect switches or circuit breakers, as specified or shown. Series ratings for overcurrent devices to meet specified short circuit withstand ratings is prohibited.

B. NOT USED

C. CIRCUIT BREAKERS (THERMAL MAGNETIC):

Thermal-magnetic circuit breakers shall be molded case equipped with toggle type handle, quick-make, quick-break over center switching mechanism that is trip-free so that breaker cannot be held closed against short circuits and abnormal currents. The tripped position shall be clearly indicated by breaker handle maintaining a position between "ON" and "OFF." All poles shall open, close, and trip simultaneously. Minimum short circuit capacity shall be 42,000 or 65,000 amperes symmetrical.

D. CIRCUIT BREAKERS (MAGNETIC ONLY):

Magnetic circuit breakers shall be molded-case equipped with toggle type handle, quick-make, quick-break over center switching mechanism that is trip-free so that breaker cannot be held closed against short circuits and abnormal currents. The tripped position shall be clearly indicated by breaker handle maintaining a position between "ON" and "OFF." All poles shall open, close, and trip simultaneously. Minimum short circuit capacity shall be [42,000] [65,000] amperes symmetrical.

2.09 MOTOR STARTER UNITS

A. GENERAL:

Motor starter units shall be combination type with contactor and thermal magnetic circuit breaker, or motor circuit protector, and solid-state overload unit as indicated on the drawings or specified in the MCC schedule. The starter units shall have a minimum combination UL listing of 42,000 or 65,000 amperes RMS symmetrical or as indicated or specified in the schedule.

B. NOT USED

C. MOTOR CIRCUIT PROTECTORS:

The molded case motor circuit protector (MCP) shall operate on the magnetic principle with a current sensing coil in each of the three poles to provide an instantaneous trip for short circuit protection. The trip setting shall be adjustable from 700 to 1300 percent of the motor full load amperes from the front of the MCP. The motor circuit protector shall be set at its lowest position at the factory.

D. CONTROL TRANSFORMERS:

Each control transformer shall be rated 480/240-120V, single phase, 2-wires, 60 Hertz. The transformer shall be sized for the load it feeds but shall not be less than the minimum ratings as follows:

NEMA starter size	Minimum transformer volt-ampere rating
1	100
2	150
3	200
4	300

Each control transformer shall be provided with time-delay, slow-blow secondary fuse rated to interrupt 10,000 amperes short circuit at 250 volts AC. Two primary fuses rated to interrupt 200,000 amperes at 600 volts shall be provided on all starters.

Fuse holder for secondary fuse shall be drawout indicating type and mounted on the door of the compartment. Fuse holders for primary fuses shall be fuse clips with full barriers between fuses.

E. CONTACTORS:

Unless otherwise specified or shown, contactors shall be full voltage, 3-pole, 600 volt AC, NEMA Size-1 minimum. Contacts shall be double break, silver-cadmium oxide, and weld resistant. Contacts shall be isolated to prevent arcing. Coils and magnets shall be capable of being removed or replaced without special tools. IEC contactors are prohibited.

Reversing, multispeed, and reduced voltage starters shall have additional contactors, overload relays, and auxiliary relays as required, and shall have mechanically interlocked contactor coils to prevent simultaneous engagement.

F. TRANSIENT VOLTAGE SURGE SUPPRESSOR:

[Refer to Section 26 04 45].

[Provide metal oxide varistor (MOV) surge protective device (SPD) integral within each motor control center that indicates the status and condition of the SPD, tested per NEMA LS-1, rated IEEE C3 Combined Wave of 20kV and 10kA with 200kAIC internal fusing and listed / labeled per UL 1449. Minimun surge rating: 160kA per phase.]

Provide a factory selected transient surge suppressor rated for each motor starter and power contactor encapsulated in a small module and mounted directly to the starter or contactor coil.

G. AUXILIARY CONTACTS:

Contactors shall be equipped with auxiliary contacts, rated 10 amperes at 120 volts AC. Refer to drawings for actual quantities required. As a minimum, each contactor shall be equipped with two normally open and two normally closed electrically isolated auxiliary contacts with the used and auxiliary contacts wired out to terminal blocks.

H. OVERLOAD RELAY:

The solid-state overload relay shall protect the power wiring and motor from excessive overcurrents. The relay shall be ambient compensated and have adjustment from 90 to 110 percent of the normal rating.

The sensing element shall be adjustable Class 20 tripping time of 20-seconds at 600-percent of current setting. The faster overload trip Class 10 (10-seconds at 600-percent of current setting) and the longer overload trip Class 30 (30-seconds at 600-percent of current setting) shall be field set by the installer during the driven equipment startup with the overload settings that are required by the type of motor driven load.

I. TERMINAL BLOCKS:

Terminal blocks shall be screw type rated 600 volts; 20 amperes for control wiring and 30 amperes power wiring with starters Size 3 and larger shall terminate the power leads directly to the contactor.

The number of terminal blocks shall be specified on the drawings. Terminal blocks shall be provided with integral marking strips and shall be permanently marked with the conductor number as specified on the drawings. Internal wiring shall be connected on one side of the terminal block; outgoing conductors shall be connected to the other side.

2.10 MISCELLANEOUS

A. GENERAL:

Control devices such as pushbuttons, selector switches, indicating lights and overload reset pushbuttons shall be mounted on the unit compartment door.

The control devices shall comply with the requirements of Section 26 01 75.

B. ELAPSED TIME INDICATOR:

Where shown or specified, the elapsed time indicator shall be as specified in Section 26 01 75. The indicator shall be mounted on the unit compartment door.

C. NAMEPLATES:

Nameplates shall be provided in accordance with the requirements of Section 26 00 00. Nameplates shall be provided for all cubicles and compartments and identify the load per NEC. A Nameplate shall be provided identifying the motor control center. Provide equipment tag numbers and descriptions as shown.

2.11 SPACE HEATERS AND THERMOSTATS

Motor control centers located outdoors or in a corrosion rated area shall be provided with space heaters and thermostats to maintain the interior temperature at more than 45 degrees F. Space heaters

and thermostats shall be rated 120 volts AC. Space heater shall be powered from a control power transformer.

[Where indicated, the space heater circuit shall be wired to terminal blocks to facilitate the connection of an external power supply when the MCC is in storage. Provide a disconnect for isolation of the external power supply.]

2.12 DRY-TYPE TRANSFORMERS

Dry-type power transformers shall [meet the requirements of Section 26 04 60] [MCC standard product with bolt-on circuit breakers]. The size and voltage shall be as specified.

2.13 PANELBOARDS

Where specified, panelboards mounted in motor control centers shall be flush mounted and shall have the quantity and size of branch circuit breakers specified. The panelboard shall meet the requirements of Section [26 04 70] [MCC standard product with [15][20]] ampere breakers.

2.14 ADJUSTABLE FREQUENCY DRIVES

[AFDs mounted in motor control centers shall be flush mounted and shall meet the following requirements.

1. AFD, ASD, VFD, VSD are interchangeable terms.

2. Provide variable or constant torque PWM type drives for motors as indicated on the Drawings. MCC mounted AFD's shall not be applied for motors exceeding 40 horsepower. Include circuit breaker disconnecting means, 3-percent line reactors and cooling fans as required to dissipate the heat into the room.

3. Provide a motor terminator to trim the reflected-wave voltage spike from reflected waves from the motor where indicated on the Drawings.

4. Provide ratings as indicated.

5 Provide microprocessor Operator Interface Station (OIS) on the AFD door.

6. EMI/RFI shielding as required for products and wiring.

7. Provide current limiting fuses for short circuit protection.

8. Provide factory technician for setup, startup services, and training.

9. Data communication: None.

10. Provide four Form-C relays with 5-ampere contacts for interlocks.

11. Provide four programmable relay outputs for on-off status, alarm, “Remote” mode.

12. Provide isolated 4-20madc analog input for speed control.

13. Provide isolated 4-20madc analog output for speed indication.

14. Provide a harmonics filter for the MCC bus. Meet IEEE-519 for voltage and current harmonics with Point-of-Common-Coupling at the MCC bus.]

2.15 REDUCED VOLTAGE SOLID STATE STARTERS (RVSS)

[RVSS mounted in motor control centers shall be flush mounted and shall meet the following requirements.

1. Provide ratings as indicated and circuit breaker.

2. Provide full-voltage operating contactor. Provide cooling fan and filter, as required.

3. Provide EMI/RFI shielding as required for products and wiring.

4. Provide current limiting fuses for short circuit protection, as required.

5. Provide factory technician for setup, startup services, and training.

6. Data communication: None.

7. Provide [one] [two] [three][four] Form-C relays with 5-ampere contacts for interlocks.

8. Provide selectable kick start and adjustable ramp up and ramp down speeds.

9. Provide overload protection with selectable classes of 10, 15, 20, and 30 with three-phase current sensing, initially set for 20 and field adjusted as required for the application by the Factory Engineer.

10. Provide the following selectable protection:

    a. Under-load
    b. Under-voltage
    c. Over-load
    d. Over-voltage
    e. Voltage Unbalance
    f. Excessive Starts Per Hour
    g. Phase Reversal
    h. Stall and Jam

11. Provide microprocessor Operator Interface Station (OIS) on the SSS door and display as a minimum:

    a. Three-phase current
    b. Three-phase voltage
    c. Power in kW
    d. Power usage in kWh
    e. Power factor
    f. Elapsed time

12. Provide programmable relay outputs for:

    a. Fault alarm
    b. On-Off status
    c. Auto mode or Remote mode status
    d. Ready status
    e. Full-Speed-Bypass status]

2.16 SPARE PARTS

One set consisting of the following spare parts shall be provided:

1--set each fuse size and type
10--indicating light bulbs

2.17 PRODUCT DATA

The following information shall be provided:

1. Manufacturer's certification that the following items are capable of interrupting and/or withstanding the specified short circuit condition:

    a. Bus bar bracing
    b. Feeder tap units
    c. Starter units

2. Operation and maintenance information.

3. Dimensions and weights.

4. Installation instructions.

5 Manufacturer's product data.

PART 3--EXECUTION

3.01 GENERAL

The motor control centers shall be erected in accordance with the recommendations of the manufacturer and with the details specified herein.

Cables larger than No. 6 AWG which hang from their vertical connections shall be supported within 2 feet of the connection.

The solid-state overload relay settings shall be implementned by the Contractor with the settings selected based on the actual full load amperes of the motor connected to the starter and the requirements of the motor driven equipment. Refer to the manufacturer's literature for setting the overload relays. Refer to the overload relay paragraph 26 09 20-2.09H for the setting options that available in the overload relay.

The motor circuit protectors shall be adjusted by the Contractor to the lowest setting not causing false tripping.

[Install motor control centers level and plumb on 3-1/2-inch concrete housekeeping pads per the manufacturer's installation instruction.]

3.02 FIELD TESTS

Motor control centers shall be tested in accordance with Section 26 00 30.

END OF SECTION

SECTION 26 09 22

ADJUSTABLE FREQUENCY DRIVES

PART 1--GENERAL

1.01 DESCRIPTION

A. SCOPE:

This section specifies 480 Vac rated adjustable frequency drive motor controller systems using insulated gate bipolar transistors (IGBT) for pulse width modulation technology (PWM).

The AFDs specified in this section shall be the product of a single vendor and mounted in the specified cabinet enclosure.

The terms AFD (adjustable frequency drive), ASD (adjustable speed drive), VFD (variable frequency drive), and VSD (variable speed drive) are interchangeable for the purposes of this specification.

Refer to the drawings for control and monitoring requirements including special interlocking requirements. Refer to the Control Specification for the control description for the AFD system.

B. SYSTEM REQUIREMENTS:

The AFD system shall convert 460 volt, 60-Hertz nominal input to a suitable voltage and frequency to cause a premium efficient, inverter duty, squirrel-cage induction motor to run at a speed proportional to an external input analog 4 to 20 ma dc or digital input command as specified for the required AFD speed range.

The AFD system shall include rectifier units, inverter units, control circuitry, protective equipment, input line reactors and output load reactors and other filters and accessories as necessary to provide the specified functions to meet voltage and current harmonics at the specified point of common connection and to mitigate the motor reflected voltage wave. Unless otherwise specified, the point of common connection for AFDs shall be the 480 distribution bus (motor control center, distribution panel, etc.) immediately upstream of the AFD.

The AFD system torque requirement shall match the pump torque requirement. Verify the pump type and select variable torque (VT) or constant torque (CT) as specified in the AFD Schedule. Select 6-Pulse units for small pump motors and 18-Pulse units for large pump motors.

C. AFD SCHEDULE:

Equipment Name & Tag Number	Drive Number	Drive Horse Power	Drive Speed Range	Driven Equipment Specification	AFD Type	AFD Enclosure & Mounting	Distance (ft) from AFD to Driven Equipment Motor

Equipment Name & Tag Number	Drive Number	Drive Horse Power	Drive Speed Range	Driven Equipment Specification	AFD Type	AFD Enclosure & Mounting	Distance (ft) from AFD to Driven Equipment Motor
[Name Pump-1 P-1000	AFD-1000	100	900-1800	11XXX	[VT][CT] [6P][18P]	NEMA-1 Gasketed, Floor Mount	100
Name Pump-22 P-2022	AFD-2022	500	300-1200	11XXX	[VT][CT] [6P][18P]	NEMA-3R Gasketed, Wall Mount	20]

1.02 QUALITY ASSURANCE

A. REFERENCES:

This section contains references to the following documents. They are a part of this section as specified and modified. In the event of conflict between the requirements of this section and those of the listed documents, the requirements of this section shall prevail.

Reference	Title
IEEE 519	IEEE Recommended Practices and Requirements for Harmonic Control in Electrical Power System
NEMA 250	Enclosures for Electrical Equipment (1000 Volts Maximum)
NEMA ICS 2	Industrial Control and Systems: Controllers, Contactors, and Overload Relays Rated 600 Volts
NEMA ICS 6	Industrial Control and Systems: Enclosures
NEMA ICS 7	Industrial Control and Systems: Adjustable-Speed Drives
NEMA ICS 7.1	Safety Standards for Construction and Guide for Selection, Installation, and Operation of Adjustable-Speed Drive Systems
NFPA 70	National Electrical Code (NEC)
UL Standard 508	Industrial Control Equipment

B. INDUSTRY STANDARDS:

The AFD shall be UL 508 listed and shall conform to the requirements specified in NEMA ICS 2, 6, 7 and 7.1.

C. UNIT RESPONSIBILITY:

The Contractor shall submit letters of certification with the shop drawings from the AFD manufacturer, the motor manufacturer, and the driven equipment manufacturer stating that they have

reviewed each application and that the combination will satisfy the application duties required, for the actual motor sizes required.

1.03 PRODUCT HANDLING

AFD units shall be shipped in air-cushion vans to ensure against shipping damage and packed in suitable protective containers. The units shall be inspected upon receipt for damage.

1.04 SUBMITTALS

The following information shall be provided:

1. A copy of this specification section, with addendum updates included, and all referenced and applicable sections, with addendum updates included, with each paragraph check-marked to indicate specification compliance or marked to indicate requested deviations from specification requirements.

   Check marks shall denote full compliance with a paragraph as a whole. If deviations from the specifications are indicated, and therefore requested by the Contractor, each deviation shall be underlined and denoted by a number in the margin to the right of the identified paragraph, referenced to a detailed written explanation of the reasons for requesting the deviation.

   The Construction Manager, Arizona Water Company (AWC), shall be the final authority for determining acceptability of requested deviations. The remaining portions of the paragraph not underlined will signify compliance on the part of the Contractor with the specifications.

   Failure to include a copy of the marked-up specification sections, along with justification(s) for any requested deviations to the specification requirements, with the submittal shall be sufficient cause for rejection of the entire submittal with no further consideration.

2. A copy of the contract document control diagrams and process and instrumentation diagrams relating to the submitted equipment, with addendum updates that apply to the equipment in this section, marked to show specific changes necessary for the equipment proposed in the submittal.

   If no changes are required, the drawing or drawings shall be marked *"no changes required"*. Failure to include copies of the relevant drawings with the submittal shall be cause for rejection of the entire submittal with no further review.

3. Certificate of Unit Responsibility attesting that the Contractor has assigned, and that the manufacturer accepts, unit responsibility in accordance with the requirements of this Section and paragraph 11000-1.02 C. No other submittal material will be reviewed until the certificate has been received and found to be in conformance with these requirements.

4. Catalog and technical data including outline dimensions, shipping section dimensions, weight, and foundation requirements for all assemblies.

5. Schematic diagrams and wiring connection diagram showing functions and identification of terminals.

6. Voltage and current Total Harmonic Distortion (THD) calculations with line reactors or filter design to mitigate harmonics to meet IEEE-519, if applicable.

PART 2--PRODUCTS

2.01 MANUFACTURES

AFDs shall be installed in the custom enclosures as specified and manufacturers include:

1. Toshiba Series:

   a. W7 18-Pulse for centrifugal fan and pump motors
   b. G7 18-Pulse for slow speed and high-torque motors
   c. Or preapproved equal.

2.02 ENCLOSURES

Provide AFD in NEMA enclosures with fan cooling and conformal coating protection on circuit boards for corrosive atmosphere protection.

A. GENERAL:

Provide enclosures with AFDs and custom control as required for the project and as indicated on the drawings. Each drive shall be designed for stand-alone operation and multiple drives shall not utilize shared components. Review the project site location, elevation, temperature, humidity, plant atmosphere, and load current-torque requirements to size the AFD and its associated enclosure with requirements specified herein and the control and monitoring devices and interlocks as indicated.

Enclosures shall be designed for indoor service. Each AFD system shall be mounted in a NEMA 250 internally force ventilated enclosure with UL approved Class 1 filters on ventilation openings. Enclosures shall be fabricated from 12-gage minimum thickness sheet steel with an interior frame or formed to provide a rigid structure.

Provide enclosure size to allow entry of power source and motor load cables as indicated on the drawings. Submit drawing of the source and load power cable location within the enclosure and indicated barriers from control and instrument wiring.

Door width shall not exceed 30 inches and shall be hung on removable-pin hinges, with three-point latch hardware, and handle latch for 3/8-inch-shackle padlock.

B. FINISH AND COATINGS:

AFD systems enclosures shall be finished with corrosion protection coatings inside and outside for hydrogen sulfide atmospheres. The electrical and electronic assemblies shall have conformal coatings.

2.03 AFD ASSEMBLIES

A. GENERAL:

AFDs shall include the following assemblies:

1. Power disconnect using a thermal magnetic circuit breaker or fused disconnect sized for the specific application by the manufacturer.

2. Line input harmonic filter, as required, for harmonic mitigation.

3. A load reactor for dV/dT mitigation or motor terminator units for addressing dv/dt effects at the motor.

4. Rectifier, direct current bus filter, and inverter.

5. Control circuitry interface with Operator Interface Unit.

6. Output protection including phase overload.

B. AFD FEATURES:

Provided with the following features:

1. Fused control circuit transformer and microprocessor for system logic sequencing functions. Provide fuses with blown fuse indicator lamps.

2. Accept [4 to 20 mAdc] [digital command input] speed reference signal.

3. A [4 to 20 mAdc] [digital] output signal proportional to inverter output frequency for the speed range specified.

4. Adjustable minimum/maximum frequency limits:

   a. Minimum frequency shall be adjustable from 6 to 40 Hertz.
   b. Maximum frequency shall be adjustable from 48 to 90 Hertz.

5. Adjustable and independent timed linear acceleration and deceleration functions, adjustable from 6 to 20 seconds.

6. Current limiting.

7. Automatic restart.

8. Control Wiring:

   a. 600 volt stranded copper
   b. 90 degrees C color-coded insulation
   c. No. 16 AWG

9. Wiring Identification and Termination: Crimp type wire lugs with sleeve type markers at each termination point and numbered terminal blocks for external connections.

10. [Electrically isolated discrete output contacts] [Digital signal output] for ready, running, remote mode status and trouble alarm.

11. Conformal coated terminal blocks for control and signal wires entering and leaving the controller.

12. Control Power: Provide a 120 Vac, triple fused, control power transformer for cooling fans and external control circuits when required. Control circuits shall be isolated from power circuits by distance and by insulated barriers.

13. Provide 120 Vac or 24 Vdc as required for Operator Interface Unit.

C. FUNCTIONAL REQUIREMENTS:

1. SUPPLY POWER: Operate continuously with supply power of 480 volts plus or minus 10 percent, 60 Hertz plus or minus 3 percent and remain on line and operate without damage to the AFD or connected load during a supply power under-voltage variation to the drive up to 85% of its nominal value for 30 milliseconds at full load.

2. ENVIRONMENTAL CONDITIONS:

   a. Ambient temperature: 0 to + 40 degrees C / 104 degrees F
   c. Elevation: 3,300 feet
   d. Atmosphere: Hydrogen Sulfide

3. LOAD: Capable of driving the specified maximum motor load continuously and under the following conditions:

   a. Deliver 110 percent of the specified load for up to 60 seconds in variable torque applications.

   b. Deliver 150 percent of the specified load for up to 60 seconds in constant torque applications.

4. EFFICIENCY: Not less than 95 percent at 60 Hertz output driving the specified maximum load at rated torque and speed at 40 degrees C ambient based on measured input power versus output power with all specified components in the system.

5. FREQUENCY AND VOLTAGE REGULATION: Output frequency regulated to within 0.6 Hertz of the signal/output frequency relationship. Output voltage regulated to within 1.0 percent to produce minimum motor heating at any operating frequency within the specified range.

6. FREQUENCY RANGE: AFD shall be capable of continuous operation with the specified load at any frequency between 6 and 60 Hertz unless noted otherwise.

7. SPACE AND AFD ACCESS:

a. Enclosure size shall not exceed the size allotments specified on the drawings nor shall any portion of the AFD system exceed a height of 90 inches.

b. Front accessible only and shall not require rear access.

c. Mount against the wall without any clearance for ventilation or other purposes.

d. Submit AFD in the enclosure drawing with the detail of front door and the internal arrangement, including the feeder and motor cables, and the control cables, and the instrument cable location and terminations.

8. AMBIENT NOISE: Free field noise generated shall not exceed 85 dBA at 3 feet out from any point on the AFD enclosure under any normal operating condition.

9. MOTOR COORDINATION: AFDs shall be configured as required to maintain output voltage peaks at the connected motor windings from reaching levels damaging to the motor insulation. Provide protection integral to the AFD or as protective hardware to be installed at the motors.

Where motor terminator units are provided, they shall be rated for the environment in which they are located. Motor terminator units shall be:

a. Cutler Hammer Reflected Wave Trap (RWT) with the maximum carrier frequency of 12 kilohertz.

b. Square D equal product.

D. PROTECTION AND ANNUNCIATION:

1. OVERCURRENT PROTECTION: Electronic current limit at 150 percent of motor nameplate current and provide motor running overcurrent protection in compliance with NFPA 70.

2. SHORT CIRCUIT PROTECTION: Protected against load faults: bolted faults, phase to phase or phase to ground shall not damage the unit. Fault protection based on a power source short circuit

capacity of 42,000 amperes RMS symmetrical at the AFD power input terminals with impedance or current limiting device provided.

3. LINE VOLTAGE: Protected against high and low line voltage on one or more phases.

4. INTERNAL FAULTS: Internal fault monitoring system to detect malfunctions to protect from transient and sustained faults and to limit damage that may be caused.

5. MOTOR OVER TEMPERATURE: Interface to motor over temperature device 2-ampere output contact to shut down and alarm if the motor becomes overheated.

6. FAULT ALARM: Indicates the cause of any shutdown visible on the AFD keypad/display without opening the AFD enclosure. As a minimum, the following faults shall be alarmed:

a. Motor over-temperature
b. Motor overcurrent
c. Incoming power line over/under/unbalanced-voltage
d. AFD over-temperature
e. AFD over-voltage
f. AFD control failure

7. SAFETY FEATURES: The AFD shall include:

a. Padlock main disconnect handle in the “OFF” position.

b. Mechanical interlock to prevent opening enclosure door with disconnect in the “ON” position while the unit door is open.

c. Auxiliary contact on main disconnect to isolate 120Vac control power when fed from external source.

d. Barriers and warning signs on terminals that are energized with the power disconnect “OFF”.

e. Separation and insulated barriers between the power and control and instrument products.

f. External emergency stop input

8. REVERSE DIRECTION PROTECTION: Provide protection from inadvertent operation in reverse where reverse rotation can damage the driven equipment.

9. CRITICAL SPEED BYPASS: Provide capability to program speed bypass for minimum two critical speed points.

9. TRANSIENT VOLTAGE PROTECTION: Provide solid state transient voltage protection to meet or exceed ANSI C37.90.

2.04 CONTROL AND MONITORING DEVICES

A. Front door mounted on the AFD enclosure between 36 inches and 72 inches above the floor for each unit:

1. Digital Operator keypad/display.
2. Local-Off-Remote door mounted selector switch.
3. Manual speed control: [Potentiometer] [OIU] function
4. Internal terminal strips for remote monitoring:

a. Run status
b. Trouble / Fail alarm
c. Auto Mode status
d. Additional devices as indicated on the drawings.

B. OPERATOR INTERFACE UNIT:

1. Digital keypad/display for monitoring and controlling the drive and to input drive parameter settings with a backlit LCD or equally visible display with a minimum of 16 characters per line.

2. Digital keypad for numerical settings in English engineering units and a guide to parameter settings. Setup operations and adjustments stored in non-volatile EEPROM memory transferable to new and spare boards. Settings shall be protected from unauthorized tampering, revision, or adjustment by a personal lockout code.

3. The digital keypad to provide programming of the drive and include:

a. Up and Down arrow keys: Increase or decrease output frequency or data values.

b. Monitor key: Selection of control mode.

c. Run and Stop keys: Starting and stopping in the manual mode.

d. Fault clear / Enter keys: Reset fault conditions and enter change

e. Program key: Enter the program mode and adjust parameters.

f. Remote / Local Location keys: Operation location and local speed control.

g. Auto / Manual Mode keys: Program mode.

h. Number keys: 0 through 9 keys to access specific parameters.

i. Keypad digital illustrations: English and display the last 5 faults.

j. Frequency / Motor Speed Indication: Calibrated in Hertz and RPM.

k. Run Status Indication.

l. Ready Status Indication.

m. Fault Alarm Indication.

[C. CONTROL AND MONITORING COMMUNICATION

None or:

1. Additional analog I/O as required for the project
2. Additional discrete I/O as required for the project
3. Thermistor inputs
4. RS-485 serial ports
5. DH-485 serial ports
6. DeviceNet Network Communication Card
7. Profibus Communication Card
8. Modbus Communication Card
9. Modbus RTU Communication Card
10. Interbus Communication Card
11. LonWorks Communication Card
12. EtherNet Communication Card]

2.05 KEYPAD FUNCTIONS AND OPERATION

A. Adjustment of the following parameters through the OIU digital keypad:

1. Current limit and torque boost.

2. Maximum voltage level.

3. Minimum/Maximum speed, Volts/Hertz, Upper and Lower limit.

4. Adjustable acceleration rate and deceleration rate.

5. Electronic thermal overload setting.

6. Coast, controlled ramp or DC injection selectable modes of stopping.

7. PID setpoint and time-function selection.

8. Critical frequency avoidance: Three set points selectable from 0 to maximum frequency with set points adjustable from 0-30 Hertz.

2.05 SPARE PARTS

The following spare parts shall be supplied with each type or frame size AFD:

1. Three sets of all replaceable fuses.

2.06 PRODUCT DATA

The following information shall be provided:

1. Operation and maintenance information as specified.

PART 3—EXECUTION

3.01 FIELD INSTALLATION

Each adjustable speed controller shall be installed and tested by the Contractor with the assistance of factory-trained pump manufacturer engineer/technician and AFD engineer/technician in accordance with the manufacturer's specifications and Section 26 09 22, and witnessed.

Manufacturers' factory representatives shall provide field testing for devices including the setup of the Operator Interface Unit and the setup of the data communication devices, where used. Upon satisfactory completion of the testing, the Contractor shall submit two certified copies of the test report.

Component failure during testing will require repeating any test associated with the failure or modified components to demonstrate proper operation.

1. Adjust drive and perform "start-up" tests as recommended by manufacturer. Set parameters and carrier frequency for existing motors to avoid insulation damage.

2. Establish proper direction of rotation for the motor controlled by the drive. Verify that the AFD is precluded from operating in a direction that can damage the driven equipment. Change motor or AFD power lead connection and not the AFD direction, where rotation is incorrect.

3. Verify that the drive will operate properly both in the "manual speed control mode" and in the "remote or automatic mode" from a remote speed signal input.

4. Set the maximum "locked rotor" current drawn during start-up recommended by the manufacturer and approved.

5. Set the minimum and maximum speeds and the acceleration and deceleration "ramps" recommended by the Construction Manager, AWC.

6. Verify the motor high temperature switch contacts are wired into the AFD 120 Vac control circuit and will trip on high winding temperature. Test or simulated the alarm and trip feature at the motor for high temperature and for high vibration, where used.

7. Operate the drive at 100 percent speed for one hour and monitor output current. The output current shall remain below the full load current listed on the motor nameplate.

8. Check for excessive heating of the drive and motor. Report any discrepancies.

3.02 HARMONIC TESTING

The Testing Firm shall perform a harmonics acceptant test with all AFD motor controllers operating to verify compliance with IEEE-519 of less than 5 percent voltage THD and 12 percent current THD at the defined point of common connection when running from Power Utility power source with a BMI-Dranetz or equal harmonic test set that provides a hard-copy record of the test results.

The test shall also be run with power sourced from the standby generator where such a power source is being used at the project site. THD shall be limited to a maximum level of 8 percent voltage THD on standby generator operation.

Submit the test performance per latest version NETA ATS Acceptance Testing Specifications. Refer to the electrical testing specification Section 26 00 30.

3.03 TRAINING

A. Two hours of onsite AFD operation and maintenance training shall be provided for AWC's Operation and Maintenance Staff.

B. Manufacturers' factory representative shall conduct the training, upon acceptance of a resume submitted by the trainer.

END OF SECTION

SECTION 27 00 00

GENERAL REQUIREMENTS FOR
INSTRUMENTATION AND CONTROL

PART 1--GENERAL

1.01 DESCRIPTION

A. SCOPE:

Contractor shall retian the services of a Qualified System Inegrator.

This section specifies general requirements which are applicable to providing a complete, functional [process control, instrumentation, communication, and signal systems for the _____]. The requirements of this section are applicable to all work specified in Division 27 of these specifications.

Electrical requirements applicable to this work include those specified in [Section 16000 for general electrical requirements; Section 16175 for electrical devices; and Section 16176 for control panels.]

B. DESCRIPTION OF WORK:

1. INSTRUMENTATION AND CONTROL SYSTEM: The work consists of [_____].

2. PROGRAMMING: Programming shall be [provided per Section _____].

C. DEFINITIONS:

1. GENERAL: Definitions of terminology related to Instrumentation and Industrial Electronic Systems used in the specifications shall be as defined in IEEE 100, ISA S51.1, and NEMA ICS 1.

2. TWO-WIRE TRANSMITTER: A transducer which derives operating power supply from the signal transmission circuit and requires no separate power supply connections. A two-wire transmitter produces a 4 to 20 milliampere current regulated signal in a series circuit with a 24 volt direct current driving potential and a maximum circuit resistance of 600 ohms.

3. FOUR-WIRE TRANSMITTER: A transducer which derives operating power from separate power supply connections. A four-wire transmitter produces a 4 to 20 milliampere current regulated signal in a series circuit with a maximum circuit resistance of 600 ohms. Four-wire transmitters typically require 120Vac or 24Vdc input power supply.

4. GALVANIC ISOLATION: Electrical node having no direct current path to another electrical node. Galvanic isolation refers to a device with electrical inputs and/or outputs which are isolated from ground, the device case, the process fluid, and separate power supply terminals. Inputs and/or outputs may be externally grounded without affecting the characteristics of the devices or providing path for circulation of ground currents.

5. PANEL: An instrument support system which may be a flat surface, a partial enclosure, or a complete enclosure for instruments and other devices used in process control systems including consoles, cabinets and racks. Panels provide mechanical protection, electrical isolation, and protection from dust, dirt, moisture, and chemical contaminants which may be present in the atmosphere.

6. DATA SHEETS: Data sheets shall refer to ISA S20 or ISA TR20.00.01.

7. SIGNAL TYPES: Used in systems specified in Division 27:

a. LOW-LEVEL ANALOG: Signal with full output level of 100 millivolts or less including thermocouples and resistance temperature detectors.

b. HIGH-LEVEL ANALOG: Signals with full output level greater than 100 millivolts but less than 30 volts, including 4 20 mA transmission.

c. DIGITAL CODE: Coded information from the output of an analog to digital converter or digital transmission terminal.

d. PULSE FREQUENCY: Counting pulses emitted from speed or flow transmitters.

e. MODULATED SIGNALS: Signals from modems or low level audio signals. Normal signal level: plus 4 dBm to minus 22 dBm. Frequency range is 300 to 10,000 Hertz.

f. DISCRETE CONTROL OR EVENTS: Dry contact closures and signals monitored by solid state equipment, relays, or control circuits.

g. LOW VOLTAGE DISCRETE CONTROL OR EVENTS: Dry contact closures and signals monitored by solid state equipment, relays, or control circuits operating at less than 30 volts and 250 milliamperes.

h. HIGH-LEVEL AUDIO SIGNALS: Audio signals exceeding plus 4 dBm, including loudspeaker circuits.

i. RADIO FREQUENCY SIGNALS: Continuous wave alternating current signals with fundamental frequency greater than 10 kilohertz.

8. SYSTEMS INTEGRATOR: A firm engaged in the business of detailed control system design and engineering, instrumentation component purchase, system and panel assembly, programming, and implementing the specified process control and industrial automation systems.

1.02 QUALITY ASSURANCE

A. REFERENCES:

This section contains references to the following documents. They are a part of this section as specified and modified. In the event of conflict between the requirements of this section and those of the listed documents, the requirements of this section shall prevail.

Reference	Title
IEEE 100	Standard Dictionary of Electrical and Electronics Terms
ISA S5.4	Instrument Loop Diagrams
ISA S20	Specification Forms For Process Measurement and Control Instrumentation, Primary Elements, and Control Valves
ISA S51.1	Process Instrumentation Terminology
ISA TR20.00.01	Specification Forms for Process Measurement and Control Instruments Part 1: General Considerations
NEMA ICS 1	General Standards for Industrial Control and Systems

B. SYSTEMS INTEGRATOR RESPONSIBILITY:

1. GENERAL

a. The specified control system and instrumentation integration including panel building, instrument calibration, testing, start-up, operational testing, and training shall be performed by a Systems Integrator staffed with qualified personnel, possessing necessary equipment and experience in performing similar installations.

b. The control system components shall, as far as practical, be of one manufacturer.

c. The components, modules, devices, and control system equipment shall be recognized industrial quality products. Recognized commercial or office grade products are prohibited.

d. The overall system performance shall be demonstrated to and accepted by AWC.

e. The application software packages shall be latest versions available, or compatible with existing software currently in use, as specified in Division 27.

2. SYSTEMS INTEGRATOR QUALIFICATIONS:

a. The following Systems Integrators are pre-qualified to perform the work specified in Division 27 without the need to provide Evidence of Experience:

1) Keller Equipment Company, Phoenix, AZ

2) DLT&V, AZ
3) Brown and Caldwell, AZ

b. Contractor-proposed Systems Integrator shall be evaluated based on submittal of the following Evidence of Experience:

1) Submit evidence of experience in performing three similar successful projects in the last five years with one project currently in progress or competed within the last two years.

2) Submit project descriptions with contact names, addresses, and telephone numbers from the project AWC, General Contractor, and Principal Design Firm.

3). Submit organization chart and resumes for proposed project personnel.

4) Submit Training and Certification information. Completion of the following training courses or appropriate portions thereof or possession of the following certifications included with the Systems Integrator's personnel experience requirements described above:

a) PROJECT MANAGER: Control System Engineer (CSE) registration, Professional Engineer (PE) registration.

b) SYSTEMS ENGINEER: Control System Engineer (CSE) registration, Professional Engineer (PE) registration, or completion of the relevant core courses in the Engineering Skills Training program.

c) PROGRAMMER: Control System Engineer (CSE) registration, Professional Engineer (PE) registration.

d) FIELD INSTRUMENT TECHNICIAN: Certified Control Systems Technician (CCST) registration or completion of the relevant core courses in the Technical Skills Training program.

e) Certified training programs, as offered by ISA.

5) Submit financial data for Systems Integrator division when subsidiary to a parent corporation. Include two years of financial data.

a) Financial Statement.
b) Balance Sheet.
c) Dun & Bradstreet Report.

3. PRE-SUBMITTAL CONFERENCE:

a. Schedule a pre-submittal conference with AWC and Construction Manager within 30-calendar days after Contract award to discuss the work, equipment, submittal format, and establish the framework for project coordination and communication.

b. Provide materials 10-days prior to the conference:

1) Instrument Index that lists the devices and instruments specified in Division 27 identify each by tag number, description, function, manufacturer, and model number.

2) Product descriptive literature with a statement that the item is as specified.

3) Proposed equal products with comparative listing of the published specifications for the specified item and the proposed item.

4) Project schedule with deliverables and milestones.

5) Project Control System Block Diagram, when specified.

6) Submit a sample portion of documented PLC and Operator Interface program, when specified.

7) A copy of this specification section, with addendum updates included, and all referenced and applicable sections, with addendum updates included, with each paragraph check-marked to indicate specification compliance or marked to indicate requested deviations from specification requirements.

A check mark shall denote full compliance with a paragraph as a whole. If deviations from the specifications are indicated, and therefore requested by the Contractor, each requested deviation shall be underlined and denoted by a number in the margin to the right of the identified paragraph, referenced to a detailed written explanation of the reasons for requesting the deviation.

The Construction Manager, AWC, shall be the final authority for determining acceptability of requested deviations. The remaining portions of the paragraph not underlined will signify compliance on the part of the Contractor with the specifications.

c. The pre-submittal conference will not replace the Product and Shop Drawing Submittal review process.

C. PROCESS EQUIPMENT COORDINATION:

1. Division 27 specified equipment shall be coordinated for proper operation with equipment related process equipment specified in other Divisions.

2. Equipment shall be integrated, furnished, and installed in conformance with the drawings, specifications, and the recommendations of the equipment manufacturer and the related processes equipment manufacturers.

3. Systems Integrator shall obtain manufacturer's technical information for items of equipment not provided with, but directly connected to, the control system. Provide the necessary coordination and components for correct signal interfaces between specified equipment and the control system.

4. Systems Integrator shall coordinate with project subcontractors and equipment suppliers.

5. Systems Integrator shall provide installation supervision for the duration of the project, a minimum of 24 man-weeks on-site.

6. Conflicts between the plans, specifications, manufacturer/vendor drawings and installation instructions, etc., shall be presented for resolution before proceeding.

[D. FACTORY ACCEPTANCE TEST (FAT):

Refer to Section _____.]

1.03 ENVIRONMENTAL CONDITIONS

A. GENERAL:

Specified data communication and process control equipment shall suitable for operation in indoor locations and in outdoor locations.

B. CORROSIVE LOCATIONS:

Corrosive locations shall be as specified in Division 26.

C. HAZARDOUS (CLASSIFIED) AREAS:

Hazardous areas shall be as specified in Division 26.

D. SEISMIC:

Equipment and supports shall be braced for the seismic zone where the Project is located.

1.04 FUNCTIONAL REQUIREMENTS

A. GENERAL:

The instrumentation and control system functions are shown on the drawings and specified in subsequent sections of Division 27. The Systems Integrator drawings and integration practices shall be as defined in IEEE 100, ISA S51.1, and NEMA ICS 1.

B. SUBMITTAL DRAWINGS:

1. GENERAL: The drawings included in the project manual are functional in nature and do not show exact locations of equipment or interconnections between equipment. The Contractor's Systems Integrator shall prepare detailed installation drawings as specified below.

Drawings prepared in the current version of AutoCAD with borders and title blocks identifying the project, system, revisions to the drawing, and type of drawing.

Each revision of a drawing shall include the date and description of the revisions. Drawing prints shall be 11" x 17" with a minimum lettering size of 1/8". [Drawings shall be generated using AWC furnished drawing borders and title blocks, and in adherence to AWC's drawing standards_____]

Diagrams shall carry a uniform and coordinated set of wire numbers and terminal block numbers in compliance with panel wiring, Section 26 01 76 and Section 27 01 10, to permit cross-referencing between contract documents and the drawings prepared by the Contractor.

2. CONNECTION DIAGRAMS: Show components of a control panel in an arrangement similar to the actual layout of the panel including internal wiring between devices within the panel. Show terminal blocks used for internal wiring or field wiring, identified as such. Indicate insulation color code, signal polarities, and wire numbers and terminal block numbers.

3. INTERCONNECTION DIAGRAMS: Show panels, panel devices, and field devices with wire numbers, cable numbers, raceway numbers, terminal box numbers, terminal block numbers, panel numbers, and field device tag numbers.

4. ELEMENTARY OR SCHEMATIC DIAGRAM: Shows, by means of graphic symbols, the electrical connections and functions of a specific circuit arrangement. Provide schematics for internal panel power distribution, lighting, and any panel HVAC.

5. ARRANGEMENT, LAYOUT, OR OUTLINE DRAWINGS: Show the dimensioned external and interior control panel views with components and Bill of Material. Provide panel heat load calculations, and indicate cooling or ventilation provisions as required.

6. [NETWORK BLOCK DIAGRAM: A network block diagram is a diagram of the overall SCADA system, with annotated boxes to show the primary network components (controllers, hubs, switches, computers, displays), and annotated interconnecting lines that show the system communication media and communication protocols].

7. [LOOP DIAGRAMS: Provide loop diagrams for analog and discrete loops interconnected into the control system circuits:

a. Prepare per ISA S5.4 – Loop Diagrams using the Example Loop Diagrams where included.

b. Show device element wiring of the system.

c. Show circuits for hardwired device interlocks.

d. Show circuit cable and wire cable numbers, signal polarities, and terminal block numbers.]

1.05 SUBMITTALS

The following information shall be provided:

1. A copy of this specification section, with addendum updates included, and all referenced and applicable sections, with addendum updates included, with each paragraph check-marked to indicate specification compliance or marked to indicate requested deviations from specification requirements. A check mark shall denote full compliance with a paragraph as a whole.

   If deviations from the specifications are indicated, and therefore requested by the Contractor, each requested deviation shall be underlined and denoted by a number in the margin to the right of the identified paragraph, referenced to a detailed written explanation of the reasons for requesting the deviation.

   The Construction Manager, AWC shall be the final authority for determining acceptability of requested deviations. The remaining portions of the paragraph not underlined will signify compliance on the part of the Contractor with the specifications.

   Failure to include a copy of the marked-up specification sections, along with justification for requested deviations from the specification requirements, with the submittal shall be sufficient cause for rejection of the entire submittal with no further consideration.

2. Detailed product literature, showing product specifications and model number breakdown. Mark to denote features and options included. Include only the applicable pages.

3. Manufacturer's installation manual excerpts, as to be used for this project:

   a. Installation details/drawings.
   b. Electrical connection diagrams
   c. Calibration procedures.

4. Drawings and diagrams specified in paragraph 27 00 00-1.04 B.

5. Nameplate list with material, tag number and description as specified herein.

6. Systems Integrator Evidence of Experience per paragraph 27 00 00-1.02 B 3.

7. Data Sheets in accordance with ISA 20 for each instrument. Identical instruments may be submitted with one common ISA Data Sheet and accompanying tag list.

Review the submittal requirements specified in other Division 27 Sections.

PART 2--PRODUCTS

2.01 MATERIALS AND QUALITY

Equipment material shall be new, free from defects, and industrial-grade, as specified. Each type of instrument, instrument accessory, and device used throughout the work shall be manufactured by one firm, where possible.

Electronic equipment shall be of solid-state construction with printed or etched circuit boards of glass epoxy of sufficient thickness to prevent warping.

Printed circuit boards in field mounted equipment shall be coated with 2 mils of conformal coating in compliance with MILSPEC MIL-I-46058C.

2.02 NAMEPLATES

Nameplates shall be provided for all field mounted instrument, analyzer, or equipment specified in Division 27. Nameplate lettering shall include the equipment or instrument loop title and the instrument or equipment tag number, where nameplate engraving is not specified or shown. Nameplates shall be [machine engraved black phenolic with white] [stamped stainless steel with] 5/32-inch high lettering, as minimum, unless otherwise specified or shown. Nameplate wording may be changed without additional cost or time, if changes are made prior to commencement of engraving.

Nameplates shall be attached to support hardware with a minimum of two self-tapping type 316 stainless steel screws in a readily visible location so the nameplate will remain to identify the service when the device is removed. Field instrument namplates shall be attached with braided stainless steel straps where not stand mounted.

2.03 PRODUCT DATA

The following Product Data shall be provided.

1. Record drawings specified by paragraph 27 00 00-1.04 B and the schedules included in Division 27 shall be provided in the latest AutoCAD format and PDF format on CD.

Provide record drawing prints of all drawings following project start-up, but prior to acceptance of the work showing the final constructed state of the instrumentation and control systems.

2. Operating and maintenance information shall be provided. Include the following in each Operation and Maintenance manual:

a. Final reviewed Submittals, including revised as-built record drawings.

b. Manufacturer's operation and maintenance instructions, edited for this project.

c. Written record of menu configuration, jumpers, switch settings, and other configurable parameters for each instrument.

PART 3--EXECUTION

3.01 INSTALLATION

A. GENERAL:

Equipment shall be installed in locations that are accessible for operation and maintenance services. Equipment not accessible shall be reinstalled at no cost to AWC.

Installation, calibration, settings, and testing procedures are specified in Section 27 00 00, Section 27 02 00 – Instrument Index Part 3 Execution, and subsequent sections of Division 27

B. FIELD EQUIPMENT:

Equipment shall be provided with ports and adjustable items accessible for in-place testing and calibration. Install equipment between 48 inches and 60 inches above the floor or permanent work platform. Equipment shall be mounted to avoid shock or vibration that may impair operation. Equipment shall be mounted for unobstructed access and walkways. Equipment support systems shall not be attached to handrails, process piping or mechanical equipment.

Instruments and cabinets supported by concrete walls shall be spaced 5/8 inch by framing channel between instrument or cabinet and wall. Block wall shall have additional installation supports, as required, to avoid damage to the wall. Equipment supports shall be hot-dip galvanized after fabrication or shall be 316L stainless steel, as shown or specified.

Support systems including panels shall be designed to prevent deformation greater than 1/8 inch in any direction under the attached equipment load and under an external load of 200 pounds.

In wet or outdoor areas, conduit penetrations into instrument housing shall be made through the bottom (preferred) or side of enclosures to minimize water entry from around or from inside of conduits. Provide conduit hubs for connections and waterproof mastic for moisture sealant.

Nameplates shall be provided for all field mounted equipment. Nameplates shall be attached to support hardware with a minimum of two self-tapping Type 316 stainless steel screws in a readily visible location, but such that if the field device is changed out, the nameplate will remain to identify the service.

C. ELECTRICAL POWER CONNECTIONS:

Equipment electric power wiring shall comply with Division 26. Power disconnect switches shall be provided within sight of equipment and labeled to indicate the specific equipment served and the power source location. "Within sight of" is defined as having an unobstructed view from the equipment served and within 50 feet of the equipment served.

Equipment power disconnect switches shall be mounted between 36 inches and 72 inches above the floor or permanent work platform. Where equipment location requirements cannot be met by a single disconnect switch, provide two disconnect switches: one at the equipment and one at the work platform.

Provide a surge arrestor on each 120 volt AC disconnect switch serving equipment located outdoors. Surge arrestor shall be Telematic, LP Series or equal.

D. SIGNAL CONNECTIONS:

Equipment electric signal connections shall be made on terminal blocks or by locking plug and receptacle assemblies. Flexible cable, receptacle and plug assemblies shall be used where shown or specified.

Jacketed flexible conduit shall be used between equipment and rigid raceway systems. Flexible cable assemblies may be used where plug and receptacle assemblies are provided and the installation is not subject to mechanical damage in normal use. The length of flexible conduit or cord assemblies shall not exceed 2 feet, except where sufficient length is required to allow withdrawal of instruments for maintenance or calibration without disconnection of conduit or cord assemblies.

3.02 FIELD TESTS AND INSPECTIONS

A. DELIVERY INSPECTION:

The Contractor shall notify the Construction Manger, AWC upon arrival of any material or equipment to be incorporated into the work. The Contractor shall remove protective covers or otherwise provide access in order that AWC's Representative may inspect such items.

B. INSPECTION AND INSTALLED TESTS:

Refer to Section 27 00 30 – Process Instrumentation and Control System Testing.

END OF SECTION

SECTION 27 00 30

PROCESS INSTRUMENTATION AND CONTROL SYSTEM TESTING

PART 1--GENERAL

1.01 DESCRIPTION

This section specifies Contractor and Systems Integrator performance in testing and documentation of process instrumentation and control system materials and equipment (PICS).

The term instrumentation covers field and panel instruments, analyzers, primary sensing elements, transmitters, power supplies, and monitoring devices.

Provide the labor, tools, material, power, and services necessary to provide the process instrumentation and control system inspection and testing specified herein:

A. Factory Acceptance Testing (FAT)

B. Pre-Operational Performance Testing Sequence:

1. Wiring Testing
2. Network and Bus Cable System Inspection and Testing
3. Piping Testing
4. Installation Inspection
5. Instrumentation Calibration
6. Loop Testing

C. Functional Testing Sequence:

1. Process Control Strategy Testing
2. Control System Closed Loop Commissioning
3. Functional Checkout

D. Operational Testing:

1. System Acceptance Testing (SAT)

1.02 QUALITY ASSURANCE

A. PICS TESTING MANAGER:

The Contractor or Systems Integrator shall appoint a startup engineer or qualified specialist as PICS Testing Manager to manage, coordinate, and supervise the testing work.

The PICS Testing Manager shall have at least 5 years of total experience, or experience on at least five separate projects, in managing the testing and startup of similar electrical and instrumentation control systems. The quality assurance program shall include:

1. Definition of process areas and systems, with testing executed on an area by area basis, based on the P&ID drawings.

2. Testing for each process area executed in sequential tasks.

3. Regularly updated testing status tracking by process area, system, and task.

4. Regularly updated separate testing documentation for each process system.

B. REFERENCES:

This section contains references to the following documents with additional references listed in Section 27 00 00.

All references shall be to the current edition of the document unless specifically stated otherwise. They are a part of this section as specified and modified. In case of conflict between the requirements of this section and those of the listed documents, the requirements of this section shall prevail.

Unless otherwise specified, references to documents shall mean the documents in effect at the time of Advertisement for Bids or Invitation to Bid (or on the effective date of the Agreement if there were no bids). If referenced documents have been discontinued by the issuing organization, reference to those documents shall mean the replacement documents issued or otherwise identified by that organization or, if there are no replacement documents, the last version of the document before it was discontinued.

Where document dates are given in the following listing, reference to those documents shall mean the specific document version associated with that date, whether or not the document has been superseded by a version with a later date, discontinued or replaced.

Reference	Title
ISA RP7.1	
ISA S51.1	Process Instrumentation Terminology

D. PROJECT LABELING

The items specifying project labeling herein shall include the following as a minimum: Owner's name, facility name, project name, and project number.

1.03 SUBMITTALS

Submittal material, to be submitted, shall consist of the following:

A. QUALIFICATION SUBMITTAL:

Provide the following submittal:

1. [PICS Testing Manager Qualifications and resume per paragraph 17030-1.02A.]

2. [Proposed process area and process system breakdowns.]

3. Example test forms to show Project Labeling per paragraph 27 00 30-1.02 D.

4. Example I/O interface summary per paragraph 27 00 30-2.02 D.

[B. NETWORK TESTING QUALIFICATION SUBMITTAL:

1. Qualifications of independent industrial network testing firm and staff performing the inspection and testing.]

C. DEFINITION SUBMITTAL:

Provide the following submittal after review of the Qualification Submittal. [Separate submittals may be provided for each process area]:

1. Control descriptions per paragraph 27 00 30-2.02 C.

2. I/O Interface Summaries per paragraph 27 00 30-2.02 D.

3. Testing status spreadsheets per paragraph 27 00 30-2.02 A. 3.

4. Test procedures per paragraph 27 00 30-3.01 D.

5. Proposed test forms per PART 3 of this Section 27 00 30, detailed for each test for this project.

[6. Certified Factory Calibration Reports.]

7. Provide a copy of this specification and the referenced and applicable sections with addenda updates included with each paragraph check-marked to indicate specification compliance or marked to indicate requested deviations from specification requirements.

8. Provide a copy of Section 27 02 00 Instrument Index with Addenda updates included, marked to indicate requested deviations from specified requirements.

9. Provide a copy of all referenced and applicable Instrumentation Drawings with addenda updates included, marked to indicate requested deviations from specified requirements.

10. Provide a copy of all referenced and applicable Electrical Drawing's Control Diagrams with addenda updates included, marked to indicate requested deviations from specified requirements.

11. Failure to include a copy of the specifications and drawings with the submittal shall be cause for rejection of the entire submittal with no further consideration.

[D. FAT:

1. FAT schedule and location.]

PART 2--PRODUCTS

2.01 GENERAL

The PICS Testing Manager shall provide test forms, documentation, and records as specified in the following paragraphs.

2.02 TESTING DOCUMENTATION

A. DOCUMENTATION RECORDS:

The PICS Testing Manager shall develop a records keeping system to document progress and completion for each task in each process area or system. The following shall be kept current and available for inspection on-site at all times in a location designated by Arizona Water Company (AWC):

1. PICS Testing Manager's qualifications, project startup and testing history, including resume per paragraph 27 00 30-1.02 A.

2. List of names of Contractor's and System Integrator's personnel associated with final construction and testing, and normal and emergency contact telephone numbers

3. Testing Status spreadsheet with breakdown for each process area and process system, with percentage complete on each testing sequence task.

4. Test Report Volumes.

B. TEST REPORT VOLUMES:

The Contractor shall develop and maintain testing documentation for each process area in separate volumes. Each volume shall be kept current and available for inspection on-site at all times in a location designated by the AWC. Each volume shall include the following as a minimum:

1. Three-ring binder with front cover and spine labeled: "Testing Documentation [For (applicable) Process Area / Process System"] including Project Labeling per paragraph 27 00 30-1.02 D.

2. Table of Contents with same labeling as the volume cover with tabs for each section:

3. Section 1 – Control Description

4. Section 2 – I/O Interface Summary

5. Section 3 – Instrument Index

6. Section 4 – Test Forms

[7. Section 5 – Certified Factory Calibration Reports]

[8. Section 6 – Final Test Report]

C. CONTROL DESCRIPTION

Provide a control description outlining operation for each process area's system. The Control Description Specification Section 27 09 00 may be used as a basis.

D. I/O INTERFACE SUMMARY

Provide I/O spreadsheets for each process area's system, per Section 27 09 90. Spreadsheets to include the following for each I/O point:

1. Signal number/tag

2. Annotation description that may be logically abbreviated and that is subject to approval.

3. Complete physical I/O channel designation and addressing or communication I/O register designation.

4. True/False status designations for digital I/O.

5. Process range; engineering units and any multipliers; and raw signal range count for analog I/O.

6. Signals: Fixed point and scaled at the Controller with minimum four significant implied digits of scaling. E.g.: 0 to 1400 at Controller for a pH range of 0 to 14 at Operator Interface.

7. Provide Operator Interface scaling to display decimal digits required.

E. INSTRUMENT INDEX

Provide a detailed Instrument Index. The Instrument Index from Section 27 02 00 may be used as a basis. Provide details on calibration ranges, setpoints, and deadbands.

2.03 PRODUCT DATA

Provide the following product data submittal after completion of testing.

The following information shall be provided:

1. Completed test forms per PART 3. [Separate submittals may be provided for each process area.]

2. [List of factory calibrated items and calibration certificates.]

3. [Documentation of network data communication nodes for network type instruments, devices, and variable frequency drives.]

[4. Final Test Report assembled in a three-ring binder and submitted at the completion of the inspection and testing activities for a process area.

The binder cover and spine shall be labeled to identify the project name and process area. Test report shall include the applicable test procedures for the process area and the completed inspection and test report forms associated with the equipment and systems of that area.

Test results shall be organized by equipment item or system with individual, labeled tab dividers to identify each. System deficiencies and non-compliant test results identified in the final test report shall be acknowledged by the responsible testing entity as corrected.]

PART 3—EXECUTION

3.01 GENERAL

A. GENERAL REQUIREMENTS:

Materials, equipment, and construction included under this specification shall be inspected in accordance with this section and subsequent sections of this division. Testing shall be performed by the Contractor in accordance with this and subsequent sections of this division.

No required test shall be applied without prior notice to Between 60 and 70 days before the commencement of any testing activity, the Contractor shall provide a detailed step-by-step test procedure complete with forms for the recording of test results, testing equipment used, and a place for identification of the individual performing or, if applicable, witnessing the test.

B. TECHNICIAN QUALIFICATIONS:

Field instruments and analyzers shall be calibrated and set up by a certified instrument technician qualified to calibrate the instrumentation.

Technicians shall be qualified by completion and certification from training courses offered by The Instrumentation, Systems, and Automation Society (ISA), the instrumentation and analyzer manufacturer's training courses, or technician training courses at a recognized trade school that specializes in instrumentation calibration.

C. TEST EQUIPMENT AND MATERIALS:

Provide test equipment to conduct the specified tests that simulate inputs and read outputs with a rated accuracy at the point of measurement at least three times greater than the component under test.

Test instruments shall have a current calibration sticker showing date of calibration, deviation from standard, name of calibration laboratory and technician, and date recalibration is required. Certified calibration reports traceable to the National Institute of Standards and Technology shall be included with the final test report.

Provide a documenting calibration system to conduct process instrumentation calibration activities that consist of a documenting process calibrator and an instrumentation data management software system that captures the calibration results and electronically document instrument data, date of calibration, calibration procedures, and as-found and as-left instrument calibration data.

Provide an instrument calibration system such as [Fluke 743B with Fluke DPC/Track Instrumentation Management software] or similar system. Calibration files shall be submitted with the final test report in hard copy and electronic formats that does not require specialized equipment or software to read and print the files.

Provide buffer solutions and reference fluids for tests of analytical equipment.

[Provide a communications and software package to record final configuration parameters and settings for variable frequency drives with the parameters acquired by connection to the network that record the configuration settings without manual data entry or transcription of values.

Vendor software tools may document the systems where a licensed copy of the identical software including connectors, cables, keys, interface cards and devices required for operation is submitted with the final documentation files.]

D. FIELD TEST PROCEDURE DOCUMENTATION:

Test procedures submitted for approval within [60] [90] [180] days from the date of Notice to Proceed.

Test procedures for each analog and discrete loop in the process control system shall be organized and assembled in separate volumes for each process area. Final test records shall be submitted in electronic form by scanning and converting the records and files to Adobe PDF format, to preserve actual signatures and signoffs.

Test procedure documentation shall include a detailed, step-by-step description of the required test procedure, panel and terminal block numbers for points of measurement, input test values, expected resultant values, test equipment required, process setup requirements, and safety precautions.

Test report forms for each loop, including forms for wiring, piping, and individual component tests, shall be included with the test procedure documentation. The actual test results shall be recorded on these forms and a final test report assembled as specified in paragraph 27 00 30-3.[05].

Test report forms shall be preprinted and completed to the extent possible prior to commencing testing. Test report forms that document the field test procedures shall include the following information:

1. Project name

2. Process area associated with the equipment under test.

3. Instrument loop description.

4. Instrument loop identification number.

5. Instrument nameplate data.

6. Instrument setup and configuration parameters.

7. Time and date of test.

8. Inspection checklist and results.

9. Reference to applicable test procedure.

10. Expected and actual test results for each test point in the loop including programmable controller data table or register values.

11. Test equipment used.

12. Space for remarks regarding test procedure or results, unusual or noteworthy observations, etc.

13. Name, date, and signature of testing personnel.

[14. Test witness' name and signature.]

E. PERFORMANCE DEVIATION TOLERANCES:

Tolerances shall be specified in Division 27. Where tolerances are not specified, refer to the manufacturer's published performance specifications.

Overall accuracy requirements for loops consisting of two or more components shall be the root-summation-square (RSS) of the component accuracy specifications. Tolerances for each required calibration point shall be calculated and recorded on the associated test report form.

F. INSTALLED TESTS:

Provide Equipment and System Performance and Operational Testing of the mechanical, electrical, instrumentation and HVAC systems. The Contractor's Quality Assurance Manager shall coordinate, manage, and supervise the quality assurance program that includes:

1. Testing plan with the sequence for the test work.
2. Calibration program for all instruments and analyzers.
3. Documentation program that records tests results.
4. Performance testing program systems.

G. WITNESSING:

AWC reserves the right to observe factory and field instrumentation testing and calibration procedures. AWC shall be notified prior to testing, as specified herein.

3.02 FACTORY TEST

A. FACTORY ACCEPTANCE TEST (FAT):

1. GENERAL: Control system equipment shall be subject to a Factory Acceptance Test [with the factory acceptance tests and subsequent retests witnessed by the Construction Manager and AWC]. Control system panel programmable logic controllers shall be loaded with the PLC software, Operator Interface software and the programming and graphic configuration application software at the control system equipment supplier's factory prior to the FAT.

Equipment, panel instruments, panels, or cabinets shall be inspected with factory testing performed. Provide written notice to AWC thirty working days before the commencement of the FAT activity and include:

a. Schedule for the FAT.

b. Location of the FAT.

c. Testing equipment used.

d. Detailed test procedure with forms for the recording of test results.

e. Sign-off spaces for the individuals performing and witnessing the tests.

2. FACTORY ACCEPTANCE TEST PROCEDURES: Panels provided shall be interlocked or networked as applicable, operated, and checked-out by the equipment supplier prior to the FAT. Submit certification indicating that the panels are ready for the FAT.

The FAT shall include the following:

a. Visual inspection of equipment, instruments, control panels, and graphic displays.

b. Validation of each input loop and output loop by simulated signals for analog inputs and by shorting discrete inputs.

c. Validation shall include:

1) Monitoring state changes on operator interface screens based on the inputs state change.

2) Observation of online PLC programming application software with the associated PLC outputs state change.

3) Outputs triggered by operator interface software devices (pushbuttons, sliders, manually-entered values, etc.)

4) Calibration and operation of instruments on or in the control panels.

d. Repair of loops which do not pass validation.

e. Retest of the FAT at no additional cost.

Panels that pass the FAT may be shipped to the site upon shipping schedule and storage accommodation approval.

3.03 PRE-OPERATIONAL PERFORMANCE TESTING

A. GENERAL REQUIREMENTS:

In general, tests shall be performed in the following order:

B. WIRING TESTS:

Electrical power and signal cable ring-out and resistance testing. Conducted in accordance with Sections 26 00 00 and 26 00 30. Wiring tests shall not be conducted until cables have been properly terminated, tagged and inspected.

1. Power and Control: Per Section 26 00 30.
2. Signal: Contractor supplied Test Form.

[C. NETWORK AND BUS CABLE INSPECTION AND TESTING:

Inspected and tested by independent industrial network testing firms.

Proprietary bus systems may be tested by the manufacturer's qualified field services technician. Manufacturer’s sales personnel are not considered to be qualified technicians unless qualifications are documented and certified by the manufacturer.

Standardized networks and buses may be tested by a qualified independent network testing service. The following types of cabling and networks shall be tested and certified by the independent industrial network testing firm:

1. Ethernet system cabling

2. DeviceNet trunk and branch cabling

3. Other networks provided as a part of a packaged monitoring or control system.

Control and instrumentation bus cabling shall be tested and verified using the standards that apply to the specific cable and bus type as follows:

1. Ethernet Category 5E and Category 6: per TIA/EIA-568B standards

2. Modbus RTU.

PRE-ACTIVE TESTING: Prior to energizing, cabling shall be inspected and tested to verify the following:

a. Media type and specifications.

b. Physical routing and project specific cable identification tagging.

c. Correct termination installation and connection of conductors to pins at terminations.

d. Record cable run length and compare to the manufacturer or industry standards to verify lengths are within specifications.

e. Locations and values of network termination resistance.

f. Integrity and grounding of cable shields.

g. Values of transient protection (surge) elements.

h. Firmware revision level of network devices available prior to energization.

i. Settings of dip switches and configuration parameters.

ACTIVE SYSTEM TESTING: After the cable or network system has been activated for testing, provide diagnostic monitoring and signal analysis for the bus network system to evaluate network and bus integrity and data transfer quality. The following parameters shall be measured, verified, and recorded:

a. Node addressing.

b. Signal attenuation before and after any repeater device and at the farthest point in the network.

c. Total network trunk voltage and current loading as applicable.

d. Baud rate, message traffic rate, percent bandwidth used, error rate, lost packet count.

e. Firmware revision level of the network devices.

f. Pre-active and active testing shall fall within the specified range of values established by the referenced standards.

g. Correct the functionality of networks and devices connected to the network.]

D. PIPING TESTS:

1. Pneumatic Piping Systems: Tested for leaks. Pneumatic piping systems shall be tested for leaks in compliance with ISA RP7.1, except performed at ten times the normal system operating pressure.

2. Liquid Piping Systems: Tested for leaks.

[E. INSTRUMENT AND COMPONENT INSPECTION:

PICS components inspection activities include the following:

1. Compare and validate instrument type and nameplate data with the drawings, specifications, and data sheet.

2. Validate instrument identification tag.

3. Confirm instrument installation conforms to drawings, specifications, and manufacturer’s instructions.

4. Verify proper conductor termination and tagging.

5. Visual check for physical damage, dirt accumulation, and corrosion.

6. Verify including isolation amplifiers, surge protection, and safety barriers are properly installed.

7. Report deficiencies identified within 24 hours of discovery. No instrument or system component shall be tested until all deficiencies are addressed.]

F. INSTRUMENTATION CALIBRATION:

1. Instruments and final elements shall be field calibrated in accordance with the manufacturer's recommended procedures and tested in accordance with the Contractor's test procedure.

2. Individual Component Calibration and Testing shall not commence until Instruments and Component Inspections are completed and documented to the satisfaction of AWC.

3. Analog instrument calibrated at 0, 10, 50, 90, and 100 percent of the specified full scale range. Each signal sensing trip and process sensing switch shall be adjusted to the required setting. Test data recorded on test forms as specified herein

4. Final element alignment tested and adjusted to verify that each final element operates smoothly over the full range in response to the specified process control signals

5. Test data shall be entered on the applicable test forms at the time of testing: Alarm trips, control trips, and switches shall be set to initial values specified in Section 27 02 00 Instrument Index at this time. Final elements shall be checked for range, dead-band, and speed of response.

6. Any component that fails to meet the required tolerances shall be repaired or replaced by the manufacturer. Repeat the specified tests until the component is within tolerance.

7. Install a calibration sticker on each instrument following successful calibration that indicates the date of calibration, the name of the testing company, and personnel who calibrated the instrument.

8. Contractor provided Test Forms.

9. CERTIFIED TEST REPORTS: Field test and inspection activities include verification of instrument parameter setup, verification of instrument zero, and performance at three operating points within the instrument range. Instrument which fail to demonstrate proper performance shall be returned for re-calibration or replaced as agreed depending on the impact to the project as determined by the AWC.

Where instrument field calibration is not feasible, certified factory calibration reports may be submitted that includes the name and address of the laboratory that conducts the calibration testing and the Certified Factory Test Reports may be submitted in lieu of field calibration.

F. LOOP TESTING:

1. Loop Testing shall not commence until the Individual Component Calibration and Testing has been completed and documented to the satisfaction of AWC.

2. Each instrument loop shall be tested as an integrated system. Check operation from field instruments to transmitter to receiving components to the vendor panel or the Plant Control System Operator Interface Station. Test signals shall be injected at the process impulse line connection where the measuring technique permits, and otherwise at the most primary signal access point.

3. Testing of loops with an interface to a programmable logic controller shall include verification of the programmable logic controller input/output assignment and verification of operation of the input/output system and processor. Inspect the data table or register in the programmable logic controller memory to verify proper operation.

4. If the output control or monitoring device fails to indicate properly, corrections to the loop circuitry or device shall be made. The test shall be repeated until devices and instruments operate as required.

5. Correct loop circuitry and repeat the test until the instruments operate properly.

3.04 FUNCTIONAL TESTING

A. PROCESS CONTROL STRATEGY/FUNCTIONAL TESTING:

1. Control Strategy Testing shall not commence until the Loop Testing has been completed and documented to the satisfaction of AWC.

2. Control Strategy Testing is performed by the [Contractor] [Programmer] and consist of installing and debugging the PLC control logic program, verifying the interface points between the PLCs and field devices and equipment, and exercising the control strategies. Control Strategy Testing will be performed on one PLC at a time.

3. Provide qualified personnel to immediately correct any deficiencies in the Work that may be encountered during Control Strategy Testing. Failure of the

Contractor to provide such personnel in a timely manner may prolong the time allotted to complete Control Strategy Testing.

B. CONTROL SYSTEM CLOSED LOOP TESTING:

1. Closed-Loop Commissioning shall not commence until the Control Strategy Testing has been successfully completed and documented to the satisfaction of AWC.

2. Closed-loop commissioning tests, performed as part of the system tests, shall demonstrate stable operation of each loop under operating conditions. Tests shall include adjustment of loop tuning parameters.

3. Tuning parameters: gain (or proportional band), integral time constant, and derivative time constant for each control loop, adjusted to provide 1/4-amplitude damping, unless otherwise specified.

4. The loop response to a step disturbance shall be provided for each loop. Two graphs shall be made for cascaded control loops, one showing the secondary loop response with its set point in manual, and the second showing overall loop response.

5. Control loops with "batch" features shall be adjusted to provide optimum response following start-up from an integral action saturation condition.

6. Graph recording shall be provided showing the response and made at sufficient speed and amplitude to show 1/4 amplitude damping. Label to show loop number and title, and settings of parameters and set point.

7. Where a loop is controlled under the direction of a programmable logic controller, AWC will perform the necessary adjustment of loop tuning parameters and setpoints; Contractor shall record the loop response, adjusting final elements, and assuring total integrated loop performance as specified.

C. FUNCTIONAL CHECKOUT:

Conducted to verify the operation of discrete and hardwired control devices. Exercise the operable devices and energizing the control circuit. Operate control element, alarm device, and interlocks to verify the specified action occurs.

3.05 OPERATIONAL TESTING

System Acceptance Test (SAT) shall be performed after component and subsystem tests have been completed. The test of the completed system shall be performed in full operation and shall demonstrate that all functional requirements of this specification have been met. SAT shall demonstrate the following:

1. Each component of the system operates correctly with all other components of the system.

2. Analog control loops operate in a stable manner.

3. Hard-wired and software equipment interlocks perform correctly.

4. Process control sequences perform correctly.

5. PLC application program performs monitoring and control functions correctly.

6. Operator interface graphics represent the monitoring and control functions correctly.

END OF SECTION

SECTION 27 01 10

INSTRUMENT AND CONTROL PANELS

PART 1--GENERAL

1.01 DESCRIPTION

A. SCOPE:

This section specifies requirements for [panels, cabinets, consoles, termination cabinets, and 19-inch electronic racks] for [instrument, control, and communication] equipment for the [_____] Project per the Panel Schedule herein.

Provide the instrument, control, and monitoring features indicated on the P&ID and electrical drawings. Panels shall be arranged to separate control and instrument devices from power wiring. Panel shall be arranged for dedicated field wiring terminations rated for 600 Vac or less for power, control, and instrument signal wiring shall be fabricated by a UL-508A recognized facility and shall bear the appropriate UL 508A Industrial Control Panel label. Panels for Hazardous (Classified) Locations shall bear the appropriate UL 698A label.

Transmitters, Analyzers, signal conditioning modules and other equipment or devices as specified in the other Division 27 sections.

Panels that contain programmable logic controllers (PLC) and operator interface stations (OIS) units shall be as indicated in the Panel Schedule. Specific panel devices are specified herein and in Section 26 01 75 – Miscellaneous Electrical Devices.

PLC and OIS shall comply with the specified products in Division 27. Panels that do not comply with the specified products and specified logic method, hardwired or PLC logic, shall not be accepted. Cost to retrofit the panel as specified shall be borne by the panel supplier. Corrections or modifications to UL 508A Industrial Control Panels shall be transported to the panel supplier's facility for corrections, testing, relabeling and inspection.

Field modifications require a UL inspector site inspection for approval of panel corrections and to re-label the panel after the field modifications are completed.

Refer to Local Control Panels - Section 26 01 76 that specifies requirements for manufacturer, vendor, and Contractor provided panels that include motor controllers, combination motor starters, control devices, and logic devices as shown on the electrical drawings.

B. PANEL SCHEDULE:

	Panel No.	Spec / P&ID	Features *	Enclosure Type	Panel Title	E-Dwgs / Notes

1	[MCP-10	17110 / P-10	1, 2, 5	NEMA-1	Plant Control Center Main Control Panel	Admin Building
2	PNL-100	11345 / P-100	3, 4	NEMA-4X	Headworks Remote I/O Panel	Outdoor
3	PNL-900	13111 / P-900	1, 2, 4, 5	NEMA-12	Odor Area Plant Control Panel	In Odor Building]
4	Remote I/O-4	17110 / P 200	1, 2, 5	19-inch rack cabinet	Blower I/O Cabinet	Blower Building]

1* - Programmable Logic Controller (PLC) or Remote I/O devices
2* - Panel mounted Operator Interface Station (OIS)
3* - Hardwired control logic required
4* - Windowed outer door and inner door for displays or devices.
5* - UPS
6* - Fans
7* - Heating
8* - Air Conditioning
9* - Sun/Rain Hood

C. PANEL DESIGN:

1. GENERAL: Panel hardware and software is specified in other Division 27 sections.

2. CONTROL POWER DISTRIBUTION: Panel containing 120-volt powered equipment shall use the din-rail power distribution method with fuses and blown fuse indication. Power is restricted to [120 Vac] [120 Vac and 24 Vdc].

3. POWER SUPPLIES: Panel containing direct current powered instruments or serving as the termination point for transmission loop powered field instruments shall contain direct current power supply system as specified herein.

4. AIR SUPPLIES: Each panel containing pneumatically operated instruments shall be provided with a dual service regulator and distribution manifold, and all other devices necessary to perform the functions specified.

5. ELECTRICAL CONTROL DEVICES: Pushbuttons, indicating lights, relays, and similar equipment located in panels specified in this section shall comply with the requirements of Section 26 01 75.

6. UNINTERRUPTIBLE POWER SUPPLIES: Panel mounted 120 Vac input and 120 Vac output are specified herein.

1.02 QUALITY ASSURANCE

A. REFERENCES

This section contains references to the following documents that are part of this section as specified and modified. In the event of conflict between the requirements of this section and those of the listed documents, the requirements of this section shall prevail.

Reference	Title
EIA RS-310C	Racks, Panels, and Associated Equipment
NEMA 250	Tests for Flammability of Plastic Materials for Parts in Devices and Appliances
UL 94	Tests for Flammability of Plastic Materials for Parts in Devices and Appliances
UL 508A	Industrial Control Panels
UL 698A	Industrial Control Panels Relating to Hazardous (Classified) Locations

This Section references other sections with associated work specified therein:

1. Contractor's Quality Assurance Manager is responsible for startup commissioning of system including mechanical, HVAC, electrical, and instrumentation system.

2. Section 26 00 00 specifies raceways, conductors, and device requirements.

3. [Section 27 00 30 Instrumentation and Control System Testing

4. Section 27 03 10 Programmable Logic Controller, Operator Interface Stations, and software requirements.

5. [Control Specifications _____]

B. LISTED PRODUCTS:

Equipment and components shall be Underwriters Laboratory (UL) listed for the purpose per Section 26 00 00 or UL recognized.

The control panels shall have factory applied UL 508A labels. Where intrinsic safety barriers are used within a control panel, provide UL 698A factory applied label as required by UL.

C. FACTORY TESTING:

Prior to shipment, the manufacturer shall test the functional operation of the control panel as described in the control description Section 27 00 30.

D. SHIPMENT, PROTECTION AND STORAGE:

Equipment shipment, protection and storage shall conform to the requirements [_____]

E. WARRANTY:

In addition to the guarantee specified in the General Conditions, [_____].

1.03 SUBMITTALS

A. GENERAL:

Submittals shall include drawings, information and technical data for equipment and as required in Section 27 00 00. Submittal information shall be included in one complete submittal.

1. A copy of this specification section, with addendum updates included, and all referenced and applicable sections, with addendum updates included, with each paragraph check-marked to indicate specification compliance or marked to indicate requested deviations from specification requirements.

   A check mark shall denote full compliance with a paragraph as a whole. If deviations from the specifications are indicated, and therefore requested by the Contractor, each deviation shall be underlined and denoted by a number in the margin to the right of the identified paragraph, referenced to a detailed written explanation of the reasons for requesting the deviation.

   The Construction Manager, Arizona Water Company (AWC), shall be the final authority for determining acceptability of requested deviations. The remaining portions of the paragraph not underlined will signify compliance on the part of the Contractor with the specifications.

   Failure to include a copy of the marked-up specification sections, along with justification(s) for any requested deviations to the specification requirements, with the submittal shall be sufficient cause for rejection of the entire submittal with no further consideration.

2. A marked copy of specification section 27 00 00.

3. A marked copy of specification section 27 00 30.

4. A marked copy of specification section 26 01 75.

5. A marked copy of specification section 26 01 76.

7. A copy of the contract document Process and Instrumentation diagrams relating to the submitted equipment, with addendum updates that apply to the equipment in this section, marked to show specific changes necessary for the equipment proposed in the submittal. If no changes are required, the drawing or drawings shall be marked "no changes required".

   Failure to include copies of the relevant drawings with the submittal shall be cause for rejection of the entire submittal with no further review.

8. Marked contract document Control Schematic diagrams related to the submitted equipment.

9. Marked contract document Control Single Line diagrams related to the submitted equipment.

10. Marked product literature of all the enclosure electrical devices and components mounted on or within the control panel.

11. List of miscellaneous items, cables, spare and replenishment parts, and chemicals to be provided, including MSDS information.

12. Dimensioned drawings:

    a. Exterior panel and layout
    b. Interior devices and layout
    c. Door-in-door construction devices, where required

13. Panel assembly drawings including sections showing clearances between face and rear mounted equipment.

14. Nameplate engraving schedule:

    a. Indicate engraving by line
    b. Character size
    c. Nameplate size
    d. Panel and equipment tag number and description

15. Heat load calculations for each cabinet based on the highest ambient temperature listed in Section 27 00 00 for the area in which the subject panel will be located.

16. Wiring drawings:

    a. Schematic diagrams
    b. Internal wiring diagrams
    c. Connection diagrams

1.04 ENVIRONMENTAL CONDITIONS

Refer to Section 27 00 00.

PART 2--PRODUCTS

2.01 FABRICATION

A. GENERAL:

Panels shall be designed for the seismic requirements of Section 27 00 00. Structures, equipment, and devices shall be braced to prevent damage from specified forces. Equipment panels shall be capable of operation following a disturbance.

Nameplates with tag number and equipment description shall identify face-mounted instruments. Instruments shall be mounted for access to components and ease of removal. Cutouts for future equipment shall be blanked off with suitable covers. Instrument tag numbers shall be identified on the panel rear.

Face-mounted equipment shall be flush or semi-flush with flat-black escutcheons. Face-mounted instruments that are more than 6 inches deep, weigh more than 10 pounds, or exert more than a 4 ft-lb moment force on the face of the panel shall be supported underneath at the rear by a 1-inch x 1/8-inch thick steel angle.

Panels less than 60 inches high shall be provided with floor stands to raise the top of the panel to 60 inches above the floor or work platform. Panels that weigh less than 100 pounds may be wall mounted.

Panels with specified requirements including stainless steel or aluminum mounting requirements that are indicated on the project drawings or on the project details take precedence over the panel types or panel features indicated herein.

B. PANEL LAYOUT:

1. Provide 20 percent spare contiguous sub-panel area for future expansion.

2. Provide minimum of 20 percent spare terminal blocks, with a minimum of 10 analog, discrete, power.

3. Provide minimum of 12 inches clear space from the bottom of the panel to the bottom of the subpanel.

2.02 HEATING, VENTILATING AND COOLING

Forced air ventilation shall be provided for panels where indicated in the Panel Schedule and if the cabinet's heat load calculations indicate that the interior temperature of the cabinet will exceed 115 degrees-F, under worst case conditions.

Ventilation for panel racks shall be venturi fans provided on 5-1/2-inch high-notched panel. Ventilation for consoles shall be similar to that for panel racks except EIA RS-310 mounting is not required. Fans shall be equipped with UL-approved washable filters and provide at least 240 cubic feet per minute (CFM). Fans shall be thermostatically controlled. Noise level at 3 feet from exterior wall and 30 degrees off axis shall not exceed 60 NC units.

Outdoor panels shall also be provided with thermostatically controlled space heaters. Space heater surface temperature that exceeds 120 degrees F requires an expanded metal guard. Thermostats shall be Honeywell T631B1013, Penn Controls A28AA-4, or equal.

Panel air conditioning cooling requirements shall be a cooling system that does not exchange cabinet interior air with ambient air. The cooling system shall be either a closed glycol loop heat exchange system or a CFC-free refrigeration system as required for the specified equipment and instrument complement and ambient temperature conditions.

Panel air conditioner shall be NEMA rated based on the installed area environment and the coils shall be Heresite, or equal coated and protected from corrosion.

2.03 PROTECTION COATING AND FINISH

Panels located outdoors or located in corrosive areas shall be bottom coated with waterproof coatings.

2.04 NAMEPLATES

External door-mounted components and the panel description shall be identified with plastic nameplates. Machine embossed metallic adhesive labels shall identify tag number of instruments inside panels. Nameplates shall be attached to panel surfaces, not to instruments.

The machine engraved laminated [black phenolic nameplates with white lettering] [white phenolic nameplates with black lettering] shall be provided for panel-mounted equipment. Nameplate engraving shall include the instrument tag number and description in 3/32-inch minimum size lettering.

The machine embossed metallic adhesive labels shall identify tag number of instruments inside panels. Nameplates shall be attached to panel surfaces, not to instruments.

The nameplates shall be attached to the panel with a minimum of two self-tapping 316 stainless steel screws. Provide RTV sealant for nameplates for stainless steel panels.

The nameplate wording may be changed without additional cost or time prior to commencement of engraving. Submit nameplate legend with the panel submittal.

2.05 PANEL FEATURES

A. INTERCONNECTION WIRING:

Panel Interconnecting Wiring:

1. Panel control wiring: Single conductor stranded copper NFPA No. 70 Type MTW No. 16 AWG minimum, with an exception for factory supplied PLC wiring harnesses that are U.L. approved.

2. Panel instrument wiring: Twisted No. 16 AWG shielded pair or tri conductors.

3. Panel power wiring: Conductors specified in Division 26 and meet the NFPA No. 70 NEC requirements for power including phase, grounded, and grounding conductors.

4. Wiring shall be supported independently of terminations by lacing to panel support structure or by slotted flame retardant plastic wiring channels.

5. Wiring channels shall comply with UL 94, Type V.

6. Wiring channel fill shall not exceed 50 percent.

B. CONDUCTOR IDENTIFICATION:

Wiring shall be tagged at terminations with machine printed plastic sleeves with three-part wire numbers for instrument and control panel internal conductors:

1. Part-1: Prefix of the wire number shall be the instrument loop number or equipment tag number.

2. Part-2: Code letter and wire colors per the following tables.

3. Part-3: Number that identifies individual circuit conductor [Rung Number] [Terminal Number].

Code	120 Vac Conductor	Color
L	Power	Black, Blue
C	Control	Black
N	Neutral	White
PG	Ground	Green

Code	V dc Conductor	Color
PS	24 Vdc Power	Blue / Blue-White
PS	12 Vdc Power	
S+	Signal (+)	Black
SG	Signal Ground	White
EG	Equipment Ground	Green
FV	Panel Foreign Voltage	Orange

C. CONDUCTOR INSTALLATION AND PROTECTION:

1. Power and control wiring shall be carried in covered channels separate from low voltage signal circuits. An interior steel barrier shall be provided between AC control devices and the electronic equipment.

2. Terminal blocks shall be strap screw type rated for 600 volts. Each terminal trip shall have a unique identifying alphanumeric code at one end and a vinyl-marking strip running the entire length of the terminal strip with a unique number for each terminal. Numbers shall be machine printed and 1/8 inch high.

3. No more than two connections shall be made to one terminal.

4. Wire connectors shall be locking fork tongue or ring tongue insulated crimp type terminals.

5. Terminal blocks shall be;

   a. Cutler Hammer or Square D 600 V 30-amperes, finger-safe terminal block and 600 V 35-amperes with #8 screw terminal block for ring or spade terminals.
   b. Phoenix Contact or Weidmuller equal products.

D. FIELD WIRING:

Field wiring shall be connected to separate dedicated terminal blocks in a dedicated part of the panel where the field cables enter the panel.

E. FUSE AND FUSE HOLDERS:

1. Fuses for 120 Vac circuits shall have a minimum of 12,000-amperes interrupting capacity and blown fuse indicators.

2. Fuses for 24 Vdc circuits shall be fast acting glass tube type rated 1/8 or 1/10 amp for 4-20 mA loops.

3. Fuses for 24 Vdc circuits shall be 1/2 amp for the power supply to individual instruments.

4. Fuse holders shall be tip-out or draw-out type.

5. Provide Phoenix Contact or equal products.

F. CONTROL POWER:

120 Vac control power source: Single power source for all control and DC power. Dual power sources, one for control power and one for DC power. Dual power sources, one for PLC and DC power and one for PLC output [and input] control power.

1. Provide control power transformers, as required for the load.

2. Provide direct current power supplies, as required for the load.

3. Provide UPS for PLC and derived loop power as defined above, as required for the load.

G. PANEL POWER:

Panel power source:

1. Provide a 120 Vac circuit for the panel light, receptacle, heating, fan, heat exchanger[, or air conditioner] cooling load as required.
2. [Provide a [240 Vac][208 Vac][120 Vac] circuit for air conditioning load as required.]

H. ACCESSORIES:

1. [Panels greater than 24” high x 24” wide shall include GFCI convenience receptacles and fluorescent utility lights.

2. Receptacles and utility lights shall not be powered by the UPS, where included.

3. Print pocket.

4. Fold-up shelf of sufficient size, sufficient weight capacity, and the proper angle for supporting a laptop computer.]

2.06 SURGE PROTECTION

Surge protectors shall be multi-stage, plug-in type selected to protect the equipment. Surge protectors shall be removable without changing the impedance of the circuit. Surge protectors product manufactures shall be:

1. Circuit Components Inc: Din Rail SDD-400 Series for Data or Analog Signals.

2. Circuit Components Inc: SPD-Series at the 120 AC incoming power.

3. Joslyn Model 1663-08

4. Taylor 1020FA

5. Phoenix Contact

6. Telematic

7. Edco

8. Or equal.

2.07 PANEL GROUNDING

A. Each panel shall be provided with two copper ground bars.

1. One bar (NEC required) shall be bonded to the panel or panel frame or back-plate and to the facility grounding system.

2. Second (signal) ground bar shall be mounted on insulated stand-offs and shall be bonded to the panel ground bar only at one point.

B. Signal circuits, signal cable shields, and low-voltage DC power supply commons shall be bonded to the signal ground bar.

C. Field analog wiring shields shall only be grounded at the signal ground bar. Test to verify that single ground point at panel signal ground bar.

D. Surge protectors and separately derived AC power supplies shall be bonded to the frame ground bar.

E. Panels exceeding 36-inches width shall contain ground bars shall be 1/4- by 1-inch copper bars extending the entire length of the panel interior at the bottom of the panel.

2.08 PANEL DRAWING PROTECTION

Provide wiring diagrams in accordance with Section 01300. Provide a panel-wiring diagram and schematic for each panel in a plastic bag or plastic container to avoid water damage and aging.

2.09 DIRECT-CURRENT POWER SUPPLIES

Nominal 24-volt direct-current instrumentation and control power supply:

1. Convection-cooled linear type or switching type.
2. Line regulation: 0.4 percent for line variations from 105 to 132 volts
3. Load regulation: 0.4 percent for load variations from 0 to full load.
4. Ripple and noise: Not exceed 100 mV peak-to-peak.
5. Hold-up time at maximum load: Not less than 16 milliseconds.
6. Continuous duty from 0 to 50 degrees C at rated load.
7. Output electronically current limited.
8. Over-voltage crowbar shutdown.
9. Output voltage:

    a. Rated 28 Vdc
    b. Adjustable plus or minus 5 percent
    c. Set to provide 26.4 volts to the panel direct current bus.

10. Power Supply: Lambda LZS series, or equal.

2.10 UNINTERRUPTIBLE POWER SYSTEM (UPS)

The UPS shall be on-line, computer-grade with electrical isolation including output neutral. UPS shall be packaged for panel enclosure mounting using a back-panel bracket or holder:

1. Nominal input voltage: 120Vac.
2. Nominal output voltage: 120Vac.

The online UPS system shall be provided with integral sealed no maintenance batteries, sized to provide full capacity backup power for [10] [30] minute minimum at connected load with integral battery charger.

The panel supplier shall calculate the required kVA rating at 150 percent of connected load. Submit load calculations, schematic diagrams, and wiring connection diagrams. Provide battery cabling and other required cabling for a complete system.

The UPS shall be mounted within the panel on a pedestal or tray with stainless-steel legs to provide space for wire entry and passage.

Uninterruptible power supply systems shall be as manufactured by Best Power Technology, Inc., Necedah, American Power Conversion, Wisconsin, or equal.

2.11 SPARE PARTS

The following spare parts shall be provided:

1. Ten each of each type of light bulb used in the panels.
2. Five each of each type and rating of fuse used in the panels.

2.12 PRODUCT DATA

The following data shall be provided in accordance with Section 01300:

1. Manufacturer's operation and maintenance information as specified in Section 01730. Manual shall include final reviewed submittal and separate record of all final configuration, jumper, and switch settings.

2. Test results as specified in Section 27 00 30-Part 2.

3. [Manufacturer's certification for the performance of features of the specified equipment that cannot be readily inspected.

4. Special requirements for delivery of the information such as time, manner, place, or quantity.

5. Installation and training forms specified in Part 3.]

PART 3--EXECUTION

3.01 GENERAL

Floor mounted cabinets shall be mounted and shimmed to precise alignment so doors operate without binding. Sealant shall be provided for conduit entering the panels.

Floor-mounted panels except in dry control rooms or electrical equipment rooms shall be mounted on 3-1/2-inch minimum height concrete pads or grouted bases as specified. Coating shall be provided for outdoor panels in contact on concrete. Field panels and cabinets shall be mounted in compliance with paragraph 27 00 00-3.01 B.

Terminals and terminal blocks shall be sprayed after all terminations have been completed with a silicone resin similar to Dow Corning R-4-3117 conformal coating.

Provide panels with the Record As-built schematic, connection, and interconnection diagrams mounted behind plexiglass holder on the inside of the door. Place documentation in a water proof clear bag in the panel document holder.

3.02 OUTDOOR PANEL SHADE COVERS

Fabricate the custom aluminum panel shade cover and mount the panels facing away from the prevailing sun or wind.

3.03 PANEL POWER SUPPLY

Power supply and conditioning equipment shall be mounted and connected in compliance with the manufacturer's instructions.

Line side disconnect switches shall be provided for power supply and conditioning equipment. Line and load side overcurrent protection shall be provided for power supply and conditioning equipment in compliance with NFPA 70. Disconnect switches shall comply with Section 26 01 75.

Small power supply and conditioning equipment may be mounted in the panel served. Larger units shall be mounted adjacent to the equipment served. Where unconditioned power is brought into control panels, it shall be enclosed in metallic raceways within the panel.

Power supply and conditioning equipment larger than 5 kVA load capacity supported from surfaces other than concrete shall be provided with sound isolators.

Final raceway connections shall be a flexible conduit in compliance with Division 26.

3.04 FACTORY TESTING

The control panel shall be assembled, interconnected, and functionally tested at the assembly shop prior to shipment.

The AWC shall have the option of witnessing the functional shop test. The Contractor shall notify the AWC at least two weeks in advance prior of the scheduled functional shop test.

3.05 FIELD TESTING

Field verify the following for Instrument and Control Panels:

1. Control circuits grounded with one terminal of each load device connected to the grounded conductor.
2. Control contacts installed in the ungrounded side of the circuit.
3. Signal and control wiring installed in separate wireways.
4. Barriers between the power wiring and the signal and control wiring.
5. Connected to the plant grounding system, as specified.
6. Center-line of wall-mounted panels shall be 48 inches above the floor.
7. Inner door contains a copy of the Record elementary and wiring diagrams.
8. Inner door contains a protected drawing holder.
9. Drawings enclosed in a transparent, protective jacket.
10. Functions as specified.
11. Mounted with stainless steel unistrut, fittings, and fasteners.
12. Tested in accordance with Section 26 00 30 and Section 27 00 30.

END OF SECTION

SECTION 27 02 00

INSTRUMENT INDEX

PART 1--GENERAL

1.01 DESCRIPTION

A. SCOPE:

This section specifies the Instrument Index and general requirements applicable to process instrumentation and analyzer systems consisting of process sensors, process indicators, signal conditioning module, control and monitoring devices, transmitters, and accessories.

The Contractor shall provide, calibrate, and test the complete process instrumentation and analyzer systems and place in operation and test the system. Testing includes tuning loops and making final adjustments to instruments and analyzers during facility start-up.

The Contactor shall provide the services of certified instrument technicians for testing and adjustment activities as specified in Section 27 00 00.

The Contractor shall examine the mechanical drawings and specifications to determine actual locations, sizes, materials and ratings of process connections.

1.02 REFERENCES

Refer to Section 27 00 00 – General Requirements for Instrumentation and Control.

Refer to Section 27 00 30 – Process Instrumentation and Control System Testing.

1.03 SUBMITTALS

Refer to Sections 27 00 00 and 27 00 30.

PART 2--PRODUCTS

2.01 INSTRUMENT INDEX

The Instrument Index, paragraph 27 02 00-3.03, lists instruments and analyzers required for the project. Instrument functions specified on this list shall be provided by the Contractor.

Additional instrumentation devices such as process taps, seals, and other items required to complete the instrument loops due to characteristics of the equipment selected by the Contractor and not specified in the instrument index or on the contract drawings shall be provided at no additional cost to provide a complete working system.

2.02 PRODUCT DATA

Test results as specified in paragraph 27 02 00-3.02 B shall be provided. Refer to Section 27 00 00 and 27 00 30 requirements. Specified instrument, analyzer, and device product data shall be provided for products that meet the specified application requirements.

PART 3--EXECUTION

3.01 GENERAL REQUIREMENTS

Materials, equipment, and installation shall be tested and inspected per Sections 27 00 00, 27 00 30, and herein.

Provide buffer solutions and reference fluids for analytical equipment test procedures.

3.02 INSTALLED EQUIPMENT - TESTS AND INSPECTION

A. Refer to Section 27 00 30 – Process Instrumentation and Control System Testing.

3.03 INSTRUMENT INDEX

The following is an index of the instrumentation equipment, analyzers, and devices.

A. DESCRIPTION OF HEADINGS:

1. TAG NUMBER: Tag Number appears as a heading (PREFIX and NUMBER) and consists of a two, three or four letter prefix indicating the instrument function followed by a number identifying the process loop with which the instrument is associated. Tag Number provides an identification of the instrument, analyzer, or device.

2. DESCRIPTION: Provides the functional description of the instrument, analyzer, or device.

3. P&ID NUMBER: Lists the Process and Instrumentation Diagram on which the instrument, analyzer, or device appears.

4. SPECIFICATION: Provides the specification reference and designation for the instrument, analyzer, or device.

5. SIZE: Provides the application data relative to sizing the instrument; flow tube diameter, probe length, associated pipe sizes, etc.

6. RANGE: Provides the calibrated instrument range for each application.

7. SETPOINT: Provides the calibrated switch setpoint.

8. COMMENTS: Provides the features, interlocks, and information applicable to the instrument, analyzer, or device.

INSTRUMENT INDEX [(SORTED BY P&ID)]							
TAG NO.	DESCRIPTION	P&ID	SPEC	SIZE	RANGE	SETPOINT	COMMENTS

END OF SECTION

SECTION 27 02 12

TRANSMITTERS

PART 1--GENERAL

1.01 DESCRIPTION

This section specifies requirements for process parameter transmitters, associated indication devices, and accessories.

The application requirements are specified in the Instrument Index - Section 27 02 00.

1.02 REFERENCES

References shall be as specified in Section 27 00 00.

1.03 SUBMITTALS

Submittals shall be provided: including:

1. A copy of this specification section, with addendum updates included, and all referenced and applicable sections, with addendum updates included, with each paragraph check-marked to indicate specification compliance or marked to indicate requested deviations from specification requirements. Referenced and applicable sections to be marked up and submitted include:

   a. Training
   b. Operation and Maintenance Information

   A check mark shall denote full compliance with a paragraph as a whole. If deviations from the specifications are indicated, and therefore requested by the Contractor, each deviation shall be underlined and denoted by a number in the margin to the right of the identified paragraph, referenced to a detailed written explanation of the reasons for requesting the deviation.

   The Construction Manager, Arizona Water Company shall be the final authority for determining acceptability of requested deviations. The remaining portions of the paragraph not underlined will signify compliance on the part of the Contractor with the specifications.

   Failure to include a copy of the marked-up specification sections, along with justification(s) for any requested deviations to the specification requirements, with the submittal shall be sufficient cause for rejection of the entire submittal with no further consideration.

2. A copy of the contract document Control Diagrams and Process and Instrumentation Diagrams relating to the submitted equipment, with addendum updates that apply to the equipment in this section, marked to show specific changes necessary for the equipment proposed in the submittal. If no changes are required, the drawing or drawings shall be marked *"no changes required"*. *Failure to include copies of the relevant drawings with the submittal shall be cause for rejection of the entire submittal with no further review.*

3. Marked Contract Document Mechanical and/or Electrical Plan drawings, sections, and details showing sensor installation locations and details. *Failure to include copies of the relevant drawings with the submittal shall be cause for rejection of the entire submittal with no further review.*

4. Marked product literature of all equipment and features to be provided.

5. Installation drawings for only the transmitters, sensors, and mounting accessories to be provided.

6. Electrical and signal connection drawings for only the transmitters and sensors to be provided.

7. List of miscellaneous items, cables, spare parts, that will be provided in accordance with transmitter requirements.

8. Marked product literature for surge protectors.

PART 2--PRODUCTS

2.01 GENERAL

Measuring elements and transmitters shall comply with the following requirements:

1. Measured parameter output indicators complying with paragraph 27 02 12-2.02 shall be provided with any transmitter that does not include an integral indicator. Indicators, whether integral or separate, shall be calibrated in process units, and engraved on the indicator scale plate.

2. The two-wire type transmitters shall have operating power derived from the signal transmission circuit.

3. Transmitters shall meet specified performance requirements with load variations within the range of 0 to 600 with the power supply at a nominal 24 volts DC with the default range of 0 to 100% corresponding to 4 to 20 madc.

4. Transmitter output shall increase with increasing measurement.

5. Time constant shall be adjustable from 0.5 to 5.0 seconds for transmitters used for flow, level transmitters used for flow measurement, or pressure measurement.

6. Transmitter output shall be galvanically isolated via electro-mechanical or optical technology.

7. Transmitter enclosures shall be rated NEMA 250, Type 4, unless otherwise specified.

8. Transmitters located outdoors shall be provided with surge protectors:

   a. Signal: Emerson/Rosemount Model 470 D, Emerson/EDCO SS64-036-2, CCI SPN-42 FS28 Series, or accepted equal.

   b. AC Power: UL 1449, LED indicator, screw terminal connections, NEMA 4X. EDCO HSP121A or accepted equal.

9. Two-wire transmitter located in a facility area classified as hazardous per the NFPA and the NEC shall be made safe by means of an intrinsic safety barrier as specified in paragraph 27 02 12-2.03.

10. Four-wire transmitters shall be isolated from the process and power or provided with a loop-powered signal current isolator connected in the output signal circuit.

2.02 PROCESS PARAMETER OUTPUT INDICATOR

Provide digital LED or LCD indicators that integral to the instrument housing where available from the manufacturer. Displays shall be scaled in engineering units, over the calibrated range of the instrument. Calibrate the indicator scale in process units.

Analog output indicators shall be 2.5-inch milli-ammeter with 90-degree movement enclosed in a NEMA 7/9 rated meter case. Provide indicators with accuracy within two percent of span. Provide a diode to maintain loop continuity for indicator removal.

2.03 INTRINSIC SAFETY BARRIERS

Intrinsic safety barriers for two-wire transmitters shall be of the active, isolating, loop powered type. Barrier shall be [Measurement Technology LTD] [Type MT3042] [Stahl Series 9000], Accepted equal.

2.04 INSTRUMENTATION SPECIFICATION SHEETS

General requirements for instruments specified in this section are listed on INSTRUSPEC sheets in paragraph 27 02 12-3.03.

Application requirements are specified in the Instrument Index, paragraph 27 02 00-2.03, and/or on the drawings.

2.05 SIGNAL CURRENT ISOLATOR

Isolator shall provide galvanic isolation of milliampere transmission signals from transmitters. Isolator shall be housed in a NEMA 250, Type 4/7 conduit body and derive operating power from the signal input circuit.

Input and output signals shall be 4 to 20 milliamperes, and error shall not exceed 0.1 percent of span. Input resistance shall not exceed 550 ohms with an output load of 250 ohms.

[Isolator shall be Moore Industries SCX 4-20madc to 4-20madc / 5.5VPL / -RF [DIN rail mounted] with maximum 250 ohm output impedance], or equal.

2.06 PRODUCT DATA

The following data provided in accordance with Section 01300:

1. Operating and maintenance information as specified in paragraph 27 00 00-2.03. Include final reviewed submittal and separate record of all final configuration, jumper, and switch settings for each analyzer.

2. Test results as specified.

PART 3--EXECUTION

3.01 INSTALLATION

Installation requirements are specified in paragraph 27 00 00-3.01.

3.02 TESTING

Testing requirements are specified in Section 27 00 30.

3.03 INSTRUMENT SPECIFICATION SHEETS

General requirements for instruments specified in this section are listed on transmitter specification sheets herein. Application requirements are specified in the Instrument Index, paragraph 27 02 00-3.03, and/or on the drawings.

3.03 INSTRUMENT SPECIFICATION

Instrument Function:	Flow Measurement
Instrument Description:	Magnetic Flow Metering System
Signal Input:	Process

Signal Output:	Analog signal as specified in paragraph 37212-2.01 [and scaled pulse frequency] [HART Protocol]
Process Connection:	Flange, ANSI B16.5, Class 150, raised face.
Product Requirements:	Magnetic flow meter provided as a system consisting of a flow tube with separate or integral converter / indicating transmitter, as scheduled in the Section 27 02 00 Instrument Index, complete with interconnecting cables Remote mounted indicating transmitter for full-scale flow rates from 1.0 to 30 feet per second. System error shall not exceed the greater of 0.5 percent of flowrate or 0.1 foot per second from 3 to 30 feet per second.
Flow Tube:	Flow tubes manufacturer shall provide grounding rings fabricated from the same metal as for the electrodes below. Flow tube sizes below 2 inches may be wafer-style ductile-iron or full-body flanged construction. Electrodes: 316L stainless steel unless otherwise specified in Section 27 02 00. Liner: Polyurethane unless otherwise specified in Section 27 02 00.
Transmitter:	Contain electronics associated with the magnetic flow meter system. Enclosure rating NEMA-4, cast aluminum or metal compartment for power, field connections and calibration adjustments separate from digital circuitry. Means to calibrate the metering system without use of external calibration units. Transmitter self-diagnostics. Traceability certificate of actual flow lab certification provided with each flowtube. Integral 4-digit LCD flow indication calibrated in process units. Data retained in non-volatile memory.
Execution:	
Installation:	Install in accordance with manufacturer's instructions and the specified functional requirements.
Cable:	Signal cable between the flow tube and transmitter provided by the system manufacturer with sufficient length of cable for

continuous installation between the flow tube and the transmitter.

Manufacturers:
[ABB Magmaster MFE
Endress + Hauser Promag 50W/53W]
Krohne Optiflux 4000
Accepted equal]

3.03 INSTRUMENT SPECIFICATION

Instrument Function:	Flow Measurement
Instrument Description:	Propeller Flowmeter Indicating Transmitter
Power Supply:	Transmitter: 24 volts DC from signal transmission circuit as specified in paragraph 27 02 12-2.01
Signal Input:	Process
Signal Output:	Transmitter only: Analog signal as specified in paragraph 27 02 12-2.01.
Process Connection:	As specified
Product Requirements:	Flowmeter operate continuously at any flow rate within the specified range and capable of intermittent over-range operation up to 150 percent of specified range without damage. Meter error shall not exceed plus or minus 2.0 percent. Flow element flange for connection for removal from the pipeline. Flow element: cast iron or steel; bronze gearbox; stainless steel, delrin or hard rubber wetted working parts; polyethylene propeller. Drive mechanism: right-angle magnetic drive Vertical drive shaft: sealed from the measured liquid. Shaft: stainless steel. Flowmeter: 6-digit straight reading totalizer protected by metal register box, and cover with locking hasp. Two-wire indicating transmitter in accordance with paragraph 27 02 12-2.01.

Meters through 12-inch diameter: Factory fabricated metering tube and straightening vanes.

Tubes: cast iron or carbon steel lined per AWWA C203.

Meters 14 inches and larger: Carbon steel saddle flange adapter for field installation welding on the pipeline.

Execution:

Installation: Install in accordance with manufacturer's instructions and the requirements of Section 27 02 00

3.03 INSTRUMENT SPECIFICATION

Instrument Function:	Flow Measurement
Instrument Description:	Turbine Flow Transmitter
Power Supply:	120 volts AC, 60-Hertz nominal
Signal Input:	Process
Signal Output:	4 to 20 mA into 0 to 600 ohms, isolated
Process Connection:	Flange, ANSI B16.5, Class 150, raised face or Saddle mount or Direct insertion into Tee; as specified in 27 02 00 Instrument Index.
Product Requirements:	Turbine meter: Service on wet, dirty and corrosive gas with magnetically coupled delrin or kynar rotor mounted on a stainless steel shaft using Hall-effect sensors. Rotor assembly: Removable without removing the meter from the process line. Bearings: Stainless steel shielded against the entrance of foreign materials with Alemite lubrication fitting or Ni-tungsten or ceramic shaft wth ruby jewel bearings. Solid-state high frequency pulse generator with accuracy plus or minus 1.5 percent of flow over a 20:1 flow range. Field verify cable length from flowmeter to remote transmitter.

Provide a pulse frequency to milliampere converter in a NEMA 4/7 case and a junction box indicator with terminals for signal connections, test jacks and plug-in indicator calibrated in process units.

Provide a dedicated local or remote Flow Indicating Transmitter with LCD display of parameters and configuration buttons.

Manufacturers:

Flow Technology
Rockwell International Mark II Turbo Meter
Central Station Steam UFM PW/FT420 series
Accepted equal.

Execution:

Installation: Install in accordance with manufacturer's instructions.

3.03 INSTRUMENT SPECIFICATION

Instrument Function:	Level Measurement
Instrument Description:	Displacer Level Transmitter
Power Supply:	As specified in paragraph 27 02 12-2.01
Signal Input:	Process
Signal Output:	As specified in paragraph 27 02 12-2.01
Process Connection:	4-inch flange, ANSI B16.5, Class 150, raised face.
Product Requirements:	Displacer level transmitter: Displacer, hanger rod or cable, and force measurement system. Transmitter: Detect fluid level by measuring the decrease in effective weight of a displacer as the amount of submergence increases. Transmitter: Mount to side or top of vessel as specified. Wetted parts type 316 stainless steel.

Accuracy: 0.5 percent of span and repeatability 0.1 percent of span.

Manufacturer:
Fisher 2340-249
Foxboro E17B
Accepted equal.

Execution:

Installation: Install in accordance with manufacturer's instructions as specified on the drawings.

Calibration: In accordance with 27 02 00-3.02 with switch set point and reset point adjusted as specified.

3.03 INSTRUMENT SPECIFICATION

Instrument Function: Level Measurement

Instrument Description: Flange Mounted Diaphragm Level Transmitter

Power Supply: As specified in paragraph 27 02 12-2.01

Signal Input: Process

Signal Output: As specified in paragraph 27 02 12-2.01

Process Connection: 3-inch flange, ANSI B16.5, Class 150, raised face

Product: Pressure Transmitter: Capacitance or piezoresistive.

Wetted parts: Type 316 stainless steel or as specified in Section 27 02 00 Instrument Index.

Range: 100:1.
Accuracy: 0.075 percent of calibrated span.
Static pressure rating: 2,000 psi.
Indicator: LCD display.
HART data communication protocol
Acceptable Manufacturer:
Rosemount 3051CD.
Yokogawa EJA210A or EJA220A.
Central Station Steam CWL Series
Accepted equal.

Execution:

Installation: Install in accordance with manufacturer's instructions and the Engineer's installation detail.

Safety instruments shall not be connected to the same process tap as instruments used for control, indication, or recording.

Pressure instruments for use with integral seals, or remote seals and capillary tubing provided by a single manufacturer, and components factory-assembled prior to shipping.

Seals: Diaphragm and Wetted Parts: Type 316L stainless steel unless otherwise specified in Section 27 02 00.

Process Connection: 3-1/2 inch saddle style, pancake, or flush flanged as required by the application.

Upper Housing/Mounting Flange: Type 316L stainless steel
Lower Housing: Type 316 stainless steel
Temperature Limits: -40 to 300 degrees F

Acceptable Manufacturer:
Rosemount 1199.
Yokogawa EJA series.
Accepted equal.

Capillary option: Seal Location: High pressure side of transmitter, direct mounting

Fill Fluid: DC 200 Silicone

Capillary Seal Connection Material: Type 316 stainless steel armored sleeving

Execution:

Installation: Install in accordance with manufacturer's instructions as specified on the drawings.

Calibration: Differential pressure transmitters in level service on pressurized tanks:

Install the diaphragm seals at the proper elevations.

Zero the transmitter on an empty tank open to the atmosphere.

3.03 INSTRUMENT SPECIFICATION

Instrument Function:	Level Measurement
Instrument Description:	Ultrasonic Level Transmitter
Power Supply:	120 Vac, 60-Hertz nominal or 24 Vdc Loop Powered as specified in 27 02 00 Instrument Index
Signal Input	Process
Signal Output:	As specified in paragraph 27 02 12-2.01
Process Connection:	As shown or specified

Signal Converter / Indicating Transmitter:

Processor: Selectable algorithims for level, volume, or flow.
Flow: Partial Flume, Wier, or configurable flow device.

Indicator: 4-digit LCD with 0.50-inch display, scaled in engineering units.
Accuracy: 0.25% of level range.
Analog Outputs: Two 4-20 mA into a minimum of 600Ω.
Discrete Outputs: Two Form-C rated at 5A, 250 Vac.
Enclosure: [NEMA 4X wall mount] [NEMA 3 panel mount]

Accessories:
- Mounting hardware and cable glands.
- Removable Handheld infrared programming device
- Programming software and cable length as required.
- Ports: [MODBUS RTU] [Fieldbus][Profibus PA] [DeviceNet].

Acceptable Manufacturer:
- Milltronics Hydroranger 200.
- Central Station Steam CPS Series.
- Accepted equal.

Instrument Identification:	LUT (continued)
Sensor:	Measuring range: [1 to 33 feet] [1 to 50 feet] Beam Angle: [12°] [6°] [3°] Pressure Limit: 30 psi Temperature Limits: -40 to +175°F.

Wetted Materials: PVDF
Cable: #16 to #20 TSP with PVC jacket
Maximum Sensor/Transmitter Separation: 1200 ft.
Rating: Class I, Div. 1, Groups A, B, C & D.

Execution:

Installation: Install in accordance with manufacturer's instructions and the Engineer's installation detail.

Contractor to verify size and type of specified tank connection with approved tank submittals.

Transducer rigidly mounted approximately two feet above maximum liquid level and accurately leveled.

Transmitter wall or stand mounted as specified.

Calibration: System calibrated in accordance with Section 27 02 00-3.02.

3.03 INSTRUMENT SPECIFICATION

Instrument Function: Pressure Measurement

Instrument Description: Gage Pressure Transmitter

Power Supply: As specified in paragraph 27 02 12-2.01

Signal Input: Process

Signal Output: Analog transmission signal as specified in paragraph 27 02 12-2.01

Process Connection: 1/2-inch female NPT flange adapter

Product Requirements: Pressure Transmitter: Capacitance or piezoresistive type.
Wetted Parts: Type 316 stainless steel or as specified in Section 27 02 00 Instrument Index.

Range: 100:1.
Accuracy: 0.075 percent of calibrated span.
Static Pressure Rating: 2,000 psi.
Indicator: LCD display.
HART standard data communication protocol

Acceptable Manufacturer:

Endress Hauser.
Accepted equal.

Execution:

Installation: Install in accordance with manufacturer's instructions and the Engineer’s installation detail.

Root valves provided at all process pressure taps.
Gauge valves provided at the instrument where the instrument is not within sight of the root valve or where two or more instruments are connected to a single tap.

Safety instruments shall not be connected to the ame process tap as instruments used for control, indication, or recording.

Pressure instruments located as close as practical to the process tap and be positioned to permit observation and maintenance.

Pressure instruments shall not be supported from process piping.

Pressure instruments for use with integral seals, or remote seals and capillary tubing provided by a single manufacturer, and all components factory-assembled prior to shipping.

Seals: Type: Diaphragm,
Process Connection: 3-1/2 inch saddle style, flush urface or inline style.

Diaphragm and Wetted Parts: Type 316L stainless steel unless otherwise specified.

Upper Housing and Mounting Flange: Type 316L stainless steel.
Lower Housing: Type 316 stainless steel

Temperature Limit, High Side: -40 to 300 degrees F

Acceptable Manufacturer:
Rosemount 1199.
Accepted equal.

Capillary option: Seal Location: High pressure side of transmitter, direct mounting.

Fill Fluid: DC 200 Silicone

Capillary Seal Connection Material: Type 316 stainless steel armored sleeving

END OF SECTION

SECTION 27 02 15

PROCESS FLUID ANALYZERS

PART 1--GENERAL

1.01 DESCRIPTION

This section specifies requirements for process fluid analyzer indicating transmitters.

1.02 REFERENCES

References shall be as specified in Section 27 00 00.

1.03 SUBMITTALS

Submittals shall be provided, including:

1. A copy of this specification section, with addendum updates included, and all referenced and applicable sections, with addendum updates included, with each paragraph check-marked to indicate specification compliance or marked to indicate requested deviations from specification requirements. Referenced and applicable sections to be marked up and submitted include:

   a. Training
   b. Operation and Maintenance Information

   A check mark shall denote full compliance with a paragraph as a whole. If deviations from the specifications are indicated, and therefore requested by the Contractor, each deviation shall be underlined and denoted by a number in the margin to the right of the identified paragraph, referenced to a detailed written explanation of the reasons for requesting the deviation.

   The Construction Manager, Arizona Water Company (AWC), shall be the final authority for determining acceptability of requested deviations. The remaining portions of the paragraph not underlined will signify compliance on the part of the Contractor with the specifications.

   Failure to include a copy of the marked-up specification sections, along with justification(s) for any requested deviations to the specification requirements, with the submittal shall be sufficient cause for rejection of the entire submittal with no further consideration.

2. A copy of the contract document Control Diagrams and Process and Instrumentation Diagrams relating to the submitted equipment, with addendum updates that apply to the equipment in this section, marked to show specific changes necessary for the equipment proposed in the submittal.

If no changes are required, the drawing or drawings shall be marked *"no changes required"*. *Failure to include copies of the relevant drawings with the submittal shall be cause for rejection of the entire submittal with no further review.*

3. Marked Contract Document Mechanical and/or Electrical Plan drawings, sections, and details showing sensor installation locations and details. *Failure to include copies of the relevant drawings with the submittal shall be cause for rejection of the entire submittal with no further review.*

4. Marked product literature of all equipment and features to be provided.

5. Installation drawings for only the analyzers, sensors, and mounting accessories to be provided.

6. Electrical and signal connection drawings for only the analyzers and sensors to be provided.

7. List of miscellaneous items, cables, spare parts, replenishment parts, and chemicals that will be provided in accordance with Instrument Specification sheet requirements.

8. List of spare parts available.

1.04 ENVIRONMENTAL CONDITIONS

Refer to Section 27 00 00.

PART 2--PRODUCTS

2.01 MANUFACTURERS

The manufacturers listed are capable of producing equipment and/or products that will satisfy the requirements of this Section. This statement shall not be construed as an endorsement of a particular manufacturer's products.

2.02 GENERAL

Process fluid analyzers shall comply with the following requirements:

1. Measured parameter output indicators shall be calibrated in process engineering units.

2. Two wire Analyzers shall be 4 to 20 milliampere output with operating power derived from the signal transmission circuit.

3. Transmitter shall support an external load of 0 to 500 ohms with the power supply at a nominal 24 volts DC with the range of 0 to 100% corresponding to 4 to 20 madc.

4. Transmitter output shall be galvanically isolated from the process and the analyzer case.

5. Analyzers located outdoors shall be provided with surge protectors:

   a. Signal: Emerson/Rosemount Model 470 D, Emerson/EDCO SS64-036-2, CCI SPN-42 FS28 Series, or accepted equal.

   b. AC Power: UL 1449, LED indicator, screw terminal connections, NEMA 4X. EDCO HSP121A or accepted equal.

6. Electrical parts of analyzer transmitter and/or primary element mechanisms shall housed in enclosures meeting NEMA 250, Type 4 requirements.

7. Electrical equipment and analyzer transmitters located outdoors or in areas specified as corrosive shall have enclosures meeting NEMA 250, Type 4X requirements.

8. One analyzer transmitter shall be provided for each sensor. Dual sensor analyzer capability shall not be utilized.

2.03 PRODUCT DATA

The following data shall be provided in accordance with Section 01300:

1. Operating and maintenance information as specified in paragraph 27 00 00-2.03. Include final reviewed submittal and separate record of all final configuration, jumper, and switch settings for each analyzer.

2. Submit test results.

PART 3--EXECUTION

3.01 INSTALLATION

Installation requirements are specified in paragraph 27 00 00-3.01.

3.02 TESTING

Testing requirements are specified in Section 27 00 30.

3.03 TRAINING

Provide two training sessions, each with one hour per type of Analyzer.

3.04 INSTRUMENT SPECIFICATIONS

General requirements for instruments specified in this section are listed on Instrument Specification sheets herein. Application requirements are specified in the Instrument Index, paragraph 27 02 00-3.03, and/or on the drawings.

3.04 CLR[1] INSTRUMENT SPECIFICATION

Instrument Identification:	CLR[1]
Instrument Description:	Chlorine Residual Analyzer
Power Supply:	120 volts AC
Signal Output:	4 to 20 mA into 0 to 500 ohms, isolated Three relay outputs, configurable NO or NC
Process Connection:	3/4-inch NPT (1/2-inch sample line)
Product Requirements:	
Analyzer:	Analyzer transmitter shall be surface mount, and shall be specific to [free] [total] chlorine as specified. The sample-flow system shall be composed of plug-in components on a swing-out panel. It shall contain large ports throughout, grit bombardment of the measuring and counter electrodes, continuous metering of reagent chemicals and detergent into the sample, a self-cleaning main orifice and a solenoid valve for automatic back-flushing cycles. A motor-driven impeller shall maintain a constant sample velocity at the measuring electrode. The reagent pump shall be a valve-less, peristaltic type with brushless stepping motor. The analyzer's electronics shall be microprocessor-based with a touch key pad and alphanumeric display. Electronic components shall be housed in NEMA 4X enclosures. Two security-coded menus shall give access to two levels of operation: a scrollable, informative operator's menu with easy change of operating parameters; and a supervisor's set-up menu with instructions and error messages to assure proper operation.

On-line and off-line diagnostics shall also be presented for servicing and calibration. The analyzer shall be easily reprogrammed for different measurement ranges.

Calibration accuracy shall be one percent of full scale; operating range shall be 40:1; and residual-measurement ranges shall be [0-0.1, 0-0.2, 0-0.5, 0-1, 0-2, 0-5, 0-10, and 0-20] mg/l.

Instrument Identification: CLR[1] (continued)

Sensor: Analyzer shall be Siemens/Wallace & Tiernan (W&T) Micro/2000. Amperometric three electrode measuring cell. The measuring cell shall be of the flow-through type with three dissimilar metal electrodes which shall produce a signal proportional to chlorine residual.

The cell shall provide continuous on-line analysis of chlorine residual sensitive to one part per billion (.001 mg/l) and be capable of continuous feedback control of chlorine residual down to ten parts per billion (.01 mg/l). It shall not lose sensitivity due to extended periods of samples containing no chlorine.

Replacement Parts: [One] sensor, W&T.
[One] preventive maintenance kit, W&T G2416.

Replenishment Parts: One bottle of electrolyte for each sensor/analyzer, W&T U28039.

Calibration Buffers: [One] cartons of four bottles of pH 4 Reagant for each sensor/analyzer, W&T U13765.
Two bottles of Potassium Iodide for each sensor/analyzer for measuring total chlorine, W&T U23661.

Execution: Install and calibrate instrument in accordance with manufacturer's recommendations. [Provide additional components as shown and required by the manufacturer: PRV, needle valves, rotameter, strainer, etc.]

Application/Calibration: In accordance with paragraph 27 02 00-3.03. [AWC will assist with calibration and provide hand-held test kit].

Manufacturer Services: Two hours per analyzer on-site, minimum one day.

3.04 CLR[2] INSTRUMENT SPECIFICATION

Instrument Identification: CLR[2]

Instrument Description:	Chlorine Residual Analyzer
Power Supply:	120 volts AC
Signal Output:	4 to 20 mA into 0 to 500 ohms, isolated Two Form-C relay outputs
Process Connection:	3/4-inch NPT (1/2-inch sample line)
Product Requirements:	Analyzer transmitter shall be surface mount, and shall be specific to [free][total] chlorine as specified. Analyzer shall consist of a measuring cell and electronic operator controls. The sample-flow system shall have all components and controls accessible from the front of the unit to permit ease of observation of solution level, sample flow, electrode cleaning and adjustment of set points. It shall contain large ports throughout, small sphere bombardment for continuous cleaning of the measuring and counterelectrodes, and continuous metering of reagent chemicals and detergent into the sample by means of a rotary valve or peristaltic type reagent pumps. Sample flow velocity at the measuring electrode shall be kept constant by a motor-driven impeller or built-in gravity flow regulator. The analyzer's electronics shall be housed in a NEMA 4X enclosure. The analyzer shall be easily reprogrammed for different measurement ranges. Calibration accuracy shall be one percent of full scale; operating range shall be 40:1; and residual-measurement ranges shall be 0-0.1, 0-0.2, 0-0.5, 0-1, 0-2, 0-5, 0-10, and 0-20 mg/l. Chlorine residual analyzer shall be Severn-Trent/Capital Controls Model 1870E.
Sensor:	Amperometric two electrode measuring cell. The measuring cell shall be of the flow-through type with gold and copper electrodes which shall produce a signal proportional to chlorine residual. The cell shall provide continuous on-line analysis of chlorine residual sensitive to one tenth of one part per million (0.1 mg/l). It shall not lose sensitivity due to extended periods of samples containing no chlorine.

Reagant:	pH Buffer for six months of operation, plus additional Buffer for Contractor calibration.
Execution:	Install and calibrate instrument in accordance with manufacturer's recommendations. [Provide additional components as shown and required by the manufacturer: PRV, needle valves, rotameter, strainer, etc.]
Application/Calibration:	In accordance with paragraph 27 02 00-3.03. [AWC will assist with calibration and provide hand-held test kit.][AWC will witness calibration, provide hand-held residual chlorine test kit.]
Manufacturer Services:	Two hours per analyzer on-site, minimum one day.

3.04 CLR[3] INSTRUMENT SPECIFICATION

Instrument Identification:	CLR[3]
Instrument Description:	Chlorine (Free) Residual Analyzer
Power Supply:	120 volts AC
Signal Output:	4 to 20 mA into 0 to 500 ohms, isolated [HART Communications protocol] [Two Form-C relay outputs]
Process Connection:	Sample [1/4" NPT]
Product Requirements:	
Analyzer:	Analyzer shall consist of an amperometric sensor, measuring cell and electronic operator controls. Analyzer shall be specific to free chlorine and shall be provided in a surface mountable enclosure. The analyzer's electronics shall be microprocessor-based with a wall mount touch key pad and alphanumeric display. Electronic components shall be housed in NEMA 4X enclosures. Unit shall have [fixed][Automatic] pH compensation. Unit shall be Endress & Hauser CCM253.
Sensor:	The measuring cell shall be of the flow-through type with a sensor which shall produce a signal proportional to chlorine residual. Unit shall be Endress & Hauser CCS141 sensor [,one CPS11 pH sensor and CPK cable,] and CCA250 flow cell.
Replacement Parts:	[One] sensor of each type.
Junction Box:	Endress & Hauser VBC[, one for chlorine and one for pH].
Extension Cable:	Endress & Hauser CMK[for chlorine and CYK for pH].
[Calibration Tool:	Photometer, Endress & Hauser CCM182.]
Execution:	Install and calibrate instrument in accordance with manufacturer's recommendations. [Provide additional components as shown and required by the manufacturer: PRV, needle valves, rotameter, strainer, etc.]
Application/Calibration:	In accordance with paragraph 27 02 00-3.03. [AWC will assist with calibration and provide hand-held test kit.][AWC will witness calibration.]
Manufacturer Services:	Two hours per analyzer on-site, minimum one day.

END OF SECTION

SECTION 27 02 16

PROCESS SWITCHES

PART 1--GENERAL

1.01 DESCRIPTION

This section specifies requirements for process activated switches, devices, and accessories.

A. SCOPE:

This section specifies requirements for instrumentation devices, which form a part of the process control systems. Application requirements are as specified in the Instrument Index, paragraph 27 02 00-3.03.

B. OPERATING REQUIREMENTS:

The devices specified in this section quantitatively convert the measured variable energy into a form suitable for process measurement and control.

1.02 QUALITY ASSURANCE

A. MANUFACTURER:

Equipment furnished under this section shall be the products of firms regularly engaged in the design and manufacture of such equipment for a minimum of five years.

B. INSTALLER:

Installation, calibration and testing of equipment furnished under this section shall be performed by qualified, skilled, ISA Certified Technicians, who are regularly engaged in such activities involving systems of similar complexity, and who possess all licenses and certificates required to perform such work.

C. REFERENCES:

References are listed in Section 27 00 00 and are a part of this section as specified and modified.

1.03 ENVIRONMENTAL CONDITIONS

Equipment provided under this section shall be suitable for operation under ambient conditions described in paragraph 27 00 00-1.03.

1.04 SUBMITTALS

Submittals shall be provided, including:

1. A copy of this specification section, referenced and applicable sections, with addendum updates included and with each paragraph check-marked to indicate specification compliance or marked to indicate requested deviations from specification requirements. Referenced and applicable sections to be marked up and submitted include:

   a. Training
   b. Operating and Maintenance Information

   A check mark shall denote full compliance with a paragraph as a whole. If deviations from the specifications are indicated, and therefore requested by the Contractor, then each deviation shall be underlined and denoted by a number in the margin to the right of the identified paragraph, referenced to a detailed written explanation of the reasons for requesting the deviation.

   The Construction Manager, Arizona Water Company, shall be the final authority for determining acceptability of requested deviations. The remaining portions of the paragraph not underlined will signify compliance on the part of the Contractor with the specifications.

   Failure to include a copy of the marked-up specification sections, along with justification(s) for any requested deviations to the specification requirements, with the submittal shall be sufficient cause for rejection of the entire submittal with no further consideration.

2. A copy of the contract document Control Diagrams and Process and Instrumentation Diagrams relating to the submitted equipment, with addendum updates that apply to the equipment in this section, marked to show specific changes necessary for the equipment proposed in the submittal.

   If no changes are required, the drawing or drawings shall be marked *"no changes required"*. *Failure to include copies of the relevant drawings with the submittal shall be cause for rejection of the entire submittal with no further review.*

3. Marked Contract Document Mechanical and/or Electrical Plan drawings, sections, and details showing sensor installation locations and details. *Failure to include copies of the relevant drawings with the submittal shall be cause for rejection of the entire submittal with no further review.*

4. Marked product literature of all equipment and features.

5. Installation details for the process switches and mounting accessories.

6. Electrical and signal connection drawings for process switches and devices.

PART 2--PRODUCTS

2.01 GENERAL

Process switches and devices shall comply with the following requirements:

1. Contact outputs used for alarm actuation shall be normally-closed and shall open to initiate the alarm.

2. Contact outputs used to control equipment shall be normally-open and shall close to start the equipment.

3. Contacts monitored by solid state equipment such as programmable controllers or annunciators shall be hermetically sealed and rated for switching currents from 20 to 100 mA at 24 volts DC.

4. Contacts, monitored by electromagnetic devices such as mechanical relays, shall be rated as NEMA ICS 2, designation B300.

5. Double barriers provided between switch elements and process fluids such that failure of one barrier will not permit process fluids into electrical enclosures.

6. Switch electrical enclosures rated as NEMA 250, Type 4 minimum.

7. Switch contacts located in Class I, Division 1 areas and monitored by solid-state circuits shall be made safe by intrinsic safety barriers as specified in paragraph 27 01 20-2.04.

8. Switch range selected so the specified set point is at least 30 percent but not more than 70 percent of the span, between the upper range limit and the lower range limit.

2.02 INSTRUMENTATION SPECIFICATIONS

Application requirements are specified in the Instrument Index, paragraph 27 02 00-3.03, and/or on the drawings.

2.03 PRODUCT DATA

The following data shall be provided:

1. Data specified in paragraph 27 00 00-2.02.
2. Submit Test results per 27 02 00-3.02 B.

PART 3--EXECUTION

3.01 INSTALLATION

Installation requirements are specified in paragraph 27 02 00-3.01.

3.02 TESTING

Testing requirements are specified in Section [_____].

3.03 INSTRUMENT SPECIFICATIONS

3.03 INSTRUMENT SPECIFICATION

Instrument Identification:	FTS
Instrument Function:	Flow Measurement
Instrument Description:	Thermal Flow Switch
Power Supply:	24 volts DC
Signal Input:	Process
Signal Output:	Contact as specified in paragraph 27 02 16-2.01
Process Connection:	As specified
Product Requirements:	Flow switch shall be the thermal convection type. Switch point shall not be affected by process fluid temperature changes in the range of 32 to 140 degrees F and shall have a repeatability of plus or minus 5 percent of range. Control unit shall operate with the specified repeatability in an ambient temperature range of 25 to 120 degrees F.
Approved Manufacturers:	Fluid Components Inc., Flow Technology Inc., or equal.
Execution:	
	Installation: Install in accordance with manufacturer's instructions.

3.03 INSTRUMENT SPECIFICATION

Instrument Identification:	FVS
Instrument Function:	Flow Measurement
Instrument Description:	Vane actuated Flow Switch
Signal Input:	Process
Signal Output:	Contacts, in accordance with paragraph 2.01 of this section.
Process Connection:	Female NPT
Product Data:	Vane actuated flow switch shall consist of a vane and a magnetically actuated switch. The body of the switch divided into upper and lower sections so that the upper section is isolated from the process fluid. A stainless steel vane and a primary magnet located in the lower section. The force of the process fluid impinging on the vane shall produce movement of the primary magnet. The primary magnet shall produce movement of the secondary magnet located in the upper body section, actuating the switch. The switch shall be DPDT and enclosed in an explosion-proof housing. The switch body and vane shall be type 316 stainless steel unless otherwise specified. Minimum pressure rating of 400 psig and minimum temperature rating of 220 degrees F.
Execution:	
Installation:	Install in accordance with the manufacturer's instructions, paragraph 27 02 00-3.01, and the specified functional requirements.
Test:	In accordance with paragraph 27 02 00-3.02.
Application/Calibration:	Application, calibration and set points as specified in paragraph 27 02 00-3.03.
Approved Manufacturers:	W. E. Anderson model V6, or equal.

3.03 INSTRUMENT SPECIFICATION

Instrument Identification:	LCS

Instrument Function:	Level Measurement
Instrument Description:	Conductance Level Switch
Power Supply:	120 volts AC, 60-Hertz nominal
Signal Input:	N/A
Signal Output:	Contacts as specified in paragraph 27 02 16-2.01
Process Connection:	Male NPT, 2-inch or 3-inch size depending on number of electrodes.
Product Requirements:	Switch shall be of the conductance type with PVC sheathed 1/4-inch stainless steel rod electrodes for lengths up through 6 feet. For lengths greater than 6 feet, provide wire suspension type with stainless steel shield electrodes. Electrode fittings shall be an epoxy coated and gasketed cast aluminum housing of suitable configuration for the application. Probes shall be B/W Controller Corporation, Charles F. Warrick Co., or equal. Induction relays shall be two winding type. Primary power supply shall be 120 volts, 60-Hertz. Secondary potential shall not exceed 300 volts AC and short circuit current shall not exceed 25 milliamperes.
Approved Manufacturers:	B/W Type DH, Warrick Series lG, or equal.
Execution:	Installation: Install in accordance with manufacturer's instructions as specified on the drawings. Calibration: In accordance with paragraph 27 02 00-3.02 B.3.b. Switch set point and reset point adjusted as specified.

3.03 INSTRUMENT SPECIFICATION

Instrument Identification:	LDS
Instrument Function:	Level Measurement

Instrument Description:	Displacer Level Switch
Power Supply:	N/A
Signal Input:	N/A
Signal Output:	Contacts as specified in paragraph 27 02 16-2.01
Process Connection:	2-inch flange, ANSI B16.5, Class 300, raised face, or as specified
Product Requirements:	Switch shall consist of one or more porcelain displacers supported on type 316 stainless steel rod or cable suspended on a spring. Switch actuating mechanism shall be a magnetic shunt carried within a nonmagnetic sealing tube, and switch operated by a magnet on the outside of the sealing tube.
Approved Manufacturers:	Magnetrol N74-2 with carbon steel cage and flanged closure and process connections, or equal.
Execution:	
	Installation: Install in accordance with manufacturer's instructions as specified on the drawings. Calibration: In accordance with paragraph 27 02 00-3.02 B.3.b. Switch set point and reset point adjusted as specified.

3.03 INSTRUMENT SPECIFICATION

Instrument Identification:	LFS
Instrument Function:	Level Measurement
Instrument Description:	Float Switch, Free-floating
Power Supply:	N/A
Signal Input:	Process
Signal Output:	Contacts, in accordance with paragraph 2.01 of this section.
Process Connection:	N/A
Product Data:	Switch shall be free-floating type, suspended from an oil resistant waterproof cable. The cable designed to support the weight of the float without additional strain relief and permanently sealed where it enters the float body. The conductors shall be a minimum size of 18 AWG. The switch shall be a single pole double throw dry contact type and rated at not less than 10 amperes at 120 Vac. Mercury switches are not acceptable. The float shall have a PVC or ABS corrosion and impact resistant shell.
Execution:	
Installation:	Install in accordance with the manufacturer's instructions, paragraph 27 02 00-3.01, and the specified functional requirements.
Test:	In accordance with paragraph 27 02 00-3.02.
Application/Calibration:	Application, calibration and set points as specified in paragraph 27 02 00-3.03.
Approved Manufacturers:	Magnetrol model T10, Warrick series M, or equal.

3.03 INSTRUMENT SPECIFICATION

Instrument Identification:	LPS
Instrument Function:	Level Measurement
Instrument Description:	Pipeline Capacitance Level Switch
Power Supply:	24 volts DC
Signal Input:	N/A
Signal Output:	Contacts as specified in paragraph 27 02 16-2.01
Process Connection:	Flange, ANSI B16.5, Class 150, wafer, size as specified
Product Requirements:	Switch shall be capacitance type with the capacitance probe fabricated into a wafer suitable for insertion between ANSI 150-pound flanges. Monitor unit provided with a 1 to 6 second adjustable time delay and Form C contacts rated NEMA C150. Monitor integral with the wafer.
Approved Manufacturers:	Endress & Hauser [LS C1145] Princo Model [L2515] or equal.
Execution:	
	Installation: Install in accordance with manufacturer's instructions as specified on the drawings. Calibration: In accordance with paragraph 27 02 00-3.02 B.3.b. Switch set point and reset point adjusted as specified.

3.03 INSTRUMENT SPECIFICATION

Instrument Identification:	LRS
Instrument Function:	Level Measurement
Instrument Description:	Radio Frequency Level Switch
Power Supply:	24 volts DC
Signal Input:	N/A
Signal Output:	Contacts as specified in paragraph 27 02 16-2.01
Process Connection:	3/4-inch male NPT
Product Requirements:	Switch shall be the radio frequency admittance type resistant to buildup of material on the probe surface. Wetted materials shall be type 316 stainless steel and Teflon unless otherwise specified. Set point and reset point fully adjustable. Sensitivity and repeatability shall be 0.1 inch .
Approved Manufacturers:	Drexelbrook [505-1000], Endress & Hauser [LS C1133], or equal.
Execution:	
	Installation: Install in accordance with manufacturer's instructions as specified on the drawings.
	Calibration: In accordance with paragraph 27 02 00-3.02 B.3.b. Switch set point and reset point adjusted as specified.

3.03 INSTRUMENT SPECIFICATION

Instrument Identification:	LUS
Instrument Type:	Level Measurement
Instrument Description:	Ultrasonic Level Switch
Power Supply:	120 Vac, 60-Hertz nominal
Signal Input:	N/A

Signal Output:	Two SPDT contact outputs rated at 5 amperes, 250 Vac.
Process Connection:	N/A
Product Data:	The ultrasonic level switch system shall consist of a piezoelectric transducer and associated electronics in a single enclosure. The switch shall sense the level by measuring the echo-time of an ultrasonic pulse. The housing suitable for operation in Class I Division 2 Hazardous areas and fabricated from polycarbonate. The sensor coated with Tefzel. The range shall be 1-16 feet from the face of the sensor. The switches adjustable over the entire range in a high, low, high-high, high-low, or low-low configuration. The switch shall have a three-digit, 9 mm LCD display and key programmable. Repeatability shall be 0.25% of full range and the resolution 0.1-inch.
Execution:	
Installation:	In accordance with manufacturer's instructions, paragraph 27 02 00-3.01, and the specified functional requirements. The switch shall be rigidly mounted approximately 2 feet above maximum level and accurately leveled. The manufacturer shall provide all appropriate mounting hardware.
Test:	In accordance with paragraph 27 02 00-3.02.

3.03 INSTRUMENT SPECIFICATION

Instrument Identification:	LUS (continued)
Application/Calibration:	Application, calibration, and set points as specified in paragraph 27 02 00-3.03.
Approved Manufacturers:	Milltronics Pointek ULS, or equal.

3.03	INSTRUMENT SPECIFICATION
Instrument Identification:	PS
Instrument Function:	Pressure Measurement
Instrument Description:	Pressure Switch
Signal Input:	Process
Signal Output:	As specified in paragraph 27 02 16-2.01
Process Connection:	1/2-inch female NPT
Product Requirements:	Pressure switch shall consist of a pressure transducer and a precision switch. Pressure transducer shall be the diaphragm piston type with wetted materials as recommended by the switch manufacturer. Piston backed by a cylinder disc to permit 10 times over-range pressure without affecting calibration. Range spring and piston shall be isolated from process fluids by the diaphragm. Switch provided with two 3/4-inch conduit connections. Switch assembly housing shall be cast aluminum rated types 3, 4, and 7D per NEMA ICS6. Contractor shall select pressure transducer so that set point falls between 30 and 70 percent of maximum range. Approximate set point and, if applicable, reset point indicated on calibrated scales. Repeatability and sensitivity shall be 1.0 percent of operating range. Unless otherwise specified, switches nonadjustable deadband type.
Approved Manufacturers:	SOR Inc. Static-O-Ring, Mercoid Model DAW or equal.
Execution:	
	Installation: Install in accordance with manufacturer's instructions and to the specified requirements.
Application/Calibration:	Application, calibration, and set points as specified in paragraph 27 02 00-3.03.

3.03 INSTRUMENT SPECIFICATION

Instrument Identification:	PLS
Instrument Function:	Pressure Measurement
Instrument Description:	Pressure Switch, low range
Power Supply:	N/A
Signal Input:	Process
Signal Output:	Contacts, in accordance with paragraph 2.01 of this section.
Process Connection:	1/4-inch female NPT
Product Data:	Pressure switches shall consist of a pressure transducer and a precision switch. Pressure transducer shall be the diaphragm type with wetted materials as recommended by the switch manufacturer, or as specified in paragraph 27 02 00-3.03. The range spring isolated from process fluids by the diaphragm. The pressure connection shall be brass or aluminum unless otherwise specified. The pressure connection sufficiently sturdy to make the switch suitable for unsupported mounting. Switch housing shall be cast aluminum rated NEMA type 4 with 3/4-inch conduit connections unless otherwise specified. Approximate set point and, if applicable, reset point indicated on calibrated scales. Repeatability and sensitivity shall be 1.0 percent of operating range. Switches shall be non-adjustable dead-band, automatic reset type with of 0-2 inches water column.
Execution:	
Installation:	Install in accordance with the manufacturer's instructions, paragraph 27 02 00-3.01, and the specified functional requirements.
Test:	In accordance with paragraph 27 02 00-3.02.

3.03 INSTRUMENT SPECIFICATION

Instrument Identification:	PLS (continued)
Application/Calibration:	Application, calibration, and set points as specified in paragraph 27 02 00-3.03.
Approved Manufacturers:	United Electric Series H400, or equal.

3.03 INSTRUMENT SPECIFICATION

Instrument Identification:	PSI
Instrument Function:	Pressure Measurement
Instrument Description:	Indicating differential Pressure Switch
Power Supply:	120 volts AC, 60-Hertz nominal
Signal Input:	N/A
Signal Output:	As specified in paragraph 27 02 16-2.01
Process Connection:	N/A
Product Requirements:	Differential pressure switch shall be a diaphragm element magnetically coupled helix pressure indicator with photocell type switch unit. Set point indicated on the dial and front adjustable. Differential pressure indicator provided with three-valve manifold as specified in paragraph 27 02 11.
Approved Manufacturers:	Dwyer Photohelic, or equal.
Execution:	
Installation:	Install in accordance with manufacturer's instructions and to the specified requirements. Root valves shall be provided at all process pressure taps. Unless otherwise specified, pressure instruments located as close as practical to the process tap but positioned to permit observation and maintenance.

Pressure instruments shall not be supported from process piping and installed in such a manner that blowout discs are not obstructed.

Application/Calibration: Application, calibration, and set points as specified in paragraph 27 02 00-3.03.

END OF SECTION

SECTION 27 03 10

PROGRAMMABLE LOGIC CONTROLLER

PART 1--GENERAL

1.01 DESCRIPTION

A. SCOPE:

This Section specifies requirements for [small] [and] [large] programmable logic controllers (PLC) designed to execute discrete and continuous control logic with high reliability in industrial applications. Enclosures and components are specified in Section 27 01 10 – Instrument and Control Panels.

The PLCs provided for this project shall comply with the requirements of this Section. The PLCs are provided by the Systems Integrator per Section 27 00 00.

The PLCs provided with equipment specified in Divisions 11, 13, 14, and 15 are provided by the Equipment Manufacturer [except for _____].

B. PLC SCHEDULE:

Panel No.	PLC Size	Testing	Spares
[MCP-10	Large	Factory Acceptance	Required
LCP-100	Small		Not required
LCP-900	Small		Not required
Remote I/O-4	Large	Factory Acceptance	Required]

C. GENERAL REQUIREMENTS:

General requirements shall be as specified in Sections 27 00 00 and 27 01 10. PLC assemblies provided by Equipment Manufacturers may be provided by firms other than the Systems Integrator.

1.02 QUALITY ASSURANCE

A. REFERENCES:

The references are a part of this Section as specified and modified. In the event of conflict between the requirements of this Section and those of the listed documents, the requirements of this Section shall prevail.

Reference	Title
IEC 61131-3	Programmable Controllers – Part 3: Programming Languages
NEMA IA 2.2	Programmable Controllers – Equipment Requirements and Tests
NEMA IA 2.3	Programmable Controllers – Programming Languages

B. SYSTEMS INTEGRATOR:

Responsibilities and qualifications shall be as specified in Section 27 00 00.
[C. FACTORY ACCEPTANCE TESTS:

Factory Acceptance Tests are scheduled in Paragraph 1.01 B.

1. Submit factory test forms for approval prior to tests.

2. Provide all expenses for one Owner staff member and one Engineer staff member to witness factory testing. Travel shall be during business hours on weekdays.
3. After Factory Acceptance Testing, complete programmable logic controllers including chassis, I/O modules, associated cabling, and miscellaneous hardware shall be turned over to AWC during construction to facilitate [Owner][Engineer] furnished programming and configuration.]

1.03 SUBMITTALS

The following information shall be provided per Section 27 00 00:

A. SHOP DRAWINGS:

Submit under Section 27 01 10, including:

1. A copy of this Specification Section, with addendum updates included, and all referenced and applicable Sections, with addendum updates included, with each paragraph check-marked to indicate Specification compliance or marked to indicate requested deviations from Specification requirements. A check mark shall denote full compliance with a paragraph as a whole.

   If deviations from the Specifications are indicated, and therefore requested by the Contractor, each deviation shall be underlined and denoted by a number in the margin to the right of the identified paragraph, referenced to a detailed written explanation of the reasons for requesting the deviation.

   The Construction Manager shall be the final authority for determining acceptability of requested deviations. The remaining portions of the paragraph not underlined will signify compliance on the part of the Contractor with the Specifications.

   Failure to include a copy of the marked-up Specification Sections, along with justification(s) for any requested deviations to the Specification requirements, with the submittal shall be sufficient cause for rejection of the entire submittal with no further consideration.

2. PLC Input/Output (I/O) loop diagram drawings.

4. Internal power distribution schematic diagram drawings.

5. PLC power supply loading calculations.

[6. List of spare parts to be provided.]

[B. FACTORY ACCEPTANCE TEST SCHEDULE AND FORMS:

Submit per the requirements of this Section.]

C. OPERATING AND MAINTENANCE INFORMATION:

Operating and maintenance information shall be provided, including the following for the PLC system:

1. Manufacturer, Representative, and Supplier contact information.

2. Manufacturer instruction manuals shall include only the following as applicable to the PLC system:

   a. Safety Precautions.
   b. Environmental Conditions.
   c. Troubleshooting guides and diagnostic techniques.
   d. Component connection diagrams.
   e. Removal and replacement instructions.

3. Warranty information.

4. Final reviewed submittal.

5. As-built drawings with record of switch and jumper settings for all components.

[6. List of spare parts provided.]

PART 2--PRODUCTS

2.01 GENERAL

A. MANUFACTURER:

AWC believes the Manufacturer is capable of producing equipment and/or products that will satisfy the requirements of this Section. This statement shall not be construed to mean that the named Manufacturer's standard product will comply with the requirements of this Section.

[Manufacturers and models shall be as specified for the purpose of compatible and efficient utilization of existing equipment, supplies, and personnel training and experience, no substitutions are permitted.]

B. MATERIALS:

Equipment and/or products shall be new and unused at the time of system assembly.

C. Controller conforming to NEMA IA 2.2, and with required memory and functional capacity to perform specified sequence of operation with scheduled input and output points.

1. RFI/EMI Susceptibility: MIL STD 461B CS02.
2. Showering Arc Test: NEMA Pub No ICS2-230.42.
3. Surge Withstand: ANSI C37.90a.
4. RFI Immunity: IEC 801-3.
5. Ground Continuity: IEC 801-5.
6. Electrostatic Discharge: IEC 801-2.
7. Electromagnetic Field: IEC 61000-4-3.
8. Fast transients: IEC 61000-4-4.

2.02 PROGRAMMABLE LOGIC CONTROLLER - LARGE

A. Manufacturer: Square D Modicon Quantum.

B. Controller TUV SIL2 Certified.

C. NEMA IA 2.3 and IEC 61131-3 compliant program editor with program written in [Ladder Logic][Function Block][Sequential Function][or Equipment Manufacturer's standard] Language. Program to be written using the same type of software as is specified below.

D. NETWORKING CONNECTIONS:

As shown. Provide all communication interfaces, network cables, taps, terminators, power supplies, and accessories for a complete operating network.

1. [Ethernet/IP.]

2. [Modicon Modbus RS-232 Serial, in addition to processor port.]

3. [Modicon Modbus RS-232 Serial, Master.]

4. [Modicon Modbus RS-232 Serial, Master.]

E. PROCESSOR:

Serial port dedicated solely for programming use, and battery-backed solid-state RAM memory for storage of the control program. Provide additional serial communications adapters required for other serial interfacing. RAM memory size shall be provided so that 50% is available after program is tested.

[F. HOT STANDBY PROCESSOR:

The hot standby processor shall provide bumpless transfer within one PLC scan and shall transfer the entire state table each scan. The data transfer rate shall be fast enough to assure bumpless transfer. The hot standby processor shall offset all network communication ports addresses so that the primary

controller is always communicating. Provide all redundant processors, switchover processors, I/O interface modules, and cabling for a complete redundant processor system. Equipment Manufacturer PLCs do not require this feature.]

G. INPUT AND OUTPUT MODULES:

1. Discrete Inputs: 120 Vac, 16 channel.

2. Discrete Outputs: [Relay output, 16 channel isolated][120 Vac, 16 channel].
3. Analog Inputs: 4-20 mAdc/1-5 Vdc, isolated channel-to-channel, 8 channel.

4. Analog Outputs: 4-20 mAdc, isolated channel-to-channel, 4 channel.

5. Spare Input/Outputs: The greater of a minimum one channel or 15 percent of each type provided per control panel.

6. I/O Chassis spare slots: [Minimum [1] per chassis][As shown].
7. [Manufactured I/O Cables for all modules:

a. By PLC Manufacturer or other electrical component Manufacturer.

b. Cable pre-attached to connector compatible with I/O module.

c. DISCRETE INPUT: [Cable pre-attached to DIN rail mounted terminal block assembly with one fused terminal with LED for each group of 8 inputs, one spare terminal for powering each input, one terminal for each input, and one common terminal for each group of 8 inputs.][Cable with one wire for each I/O module terminal, ready for insertion into separate terminal blocks for field connections.]

d DISCRETE OUTPUT: [Cable pre-attached to DIN rail mounted terminal block assembly with one fused terminal with 120 Vac LED for each output, two terminals for each relay output, and one common terminal for each output.] [Cable pre-attached to DIN rail mounted terminal block assembly with one fused terminal with 120 Vac LED for each group of 8 outputs, one spare terminal for powering each output, one terminal for each output, and one common terminal for each group of 8 outputs.] [Cable with one wire for each I/O module terminal, ready for insertion into separate terminal blocks for field connections.]

e ANALOG INPUT: [Cable pre-attached to DIN rail mounted terminal block assembly with one fused terminal with LED for each input, two terminals for each input, and one common terminal for each input.][Cable with one wire for each I/O module terminal, ready for insertion into separate terminal blocks for field connections.]

f. ANALOG OUTPUT: [Cable pre-attached to DIN rail mounted terminal block assembly with one fused terminal with LED for each input, two terminals for each input, and one common terminal for each input.][Cable with one wire for each I/O module terminal, ready for insertion into separate terminal blocks for field connections.]

g. Verify cable length required prior to ordering.]

H. POWER SUPPLIES:

1. [Redundant Processor Chassis: [Single][Redundant], 120 Vac input.]

2. Processor and I/O Chassis: [Single][Redundant], 120 Vac input.

3. I/O only Chassis: [Single][Redundant], 120 Vac input.

I. MISCELLANEOUS:

Provide all cables, taps, terminators, power supplies, and accessories for a complete operating PLC system.

2.03 PROGRAMMABLE LOGIC CONTROLLER - SMALL

A. Manufacturer: [Square D Modicon Momentum] [_____]

B. NEMA IA 2.3 and IEC 61131-3 compliant program editor with program written in [Ladder Logic][Function Block][Sequential Function][or Equipment Manufacturer's standard] Language. Program to be written using the same type of software as is specified below.

C. NETWORKING CONNECTIONS:

As shown. Provide all communication interfaces, network cables, taps, terminators, power supplies, and accessories for a complete operating network.

1. [Ethernet/IP.]
2. [Modicon Modbus Plus.]
3. [Modicon Modbus RS-232 Serial, in addition to processor port.]

D. PROCESSOR:

With Ethernet port and serial port dedicated solely for programming use, minimum 200k bytes (8 bit) for IEC 1131 control programs, and 24k words (16 bit) for storage of data in battery-backed RAM memory. Provide additional serial communications adapters required for other serial interfacing. Include real-time clock.

E. INPUT AND OUTPUT MODULES:

1. Discrete Inputs: [120 Vac][24 Vdc], 16 channel.
2. Discrete Outputs: [Relay output, 16 channel isolated][120 Vac, 16 channel].

3. Analog Inputs: 4-20 mAdc/1-5 Vdc, isolated channel-to-channel, 4 channel.

4. Analog Outputs: 4-20 mAdc, 4 channel.

5. I/O module terminations: By Manufacturer to match module.

6. I/O module interface modules: Provide as necessary including cabling to interface all I/O to processor.

7. Spare Input/Outputs: The greater of a minimum one channel or 15 percent of each type provided per control panel.

F. POWER SUPPLIES:

24 Vdc. Refer to Section 27 01 10 for power supply.

G. MISCELLANEOUS:

Provide all cables, taps, terminators, power supplies, and accessories for a complete operating PLC system.

2.04 PROGRAMMING SOFTWARE

The following software shall be provided by the Systems Integrator for this project.

A. PROGRAMMABLE LOGIC CONTROLLER – LARGE:

1. Manufacturer: [Square D Modicon [Concept][Unity]
2. Licenses: [Provide 1 License. Request Owner / City licensee information prior to ordering for registration. Provide one PC to PLC programming cable for each license][Owner has licensed copy for their use].

B. PROGRAMMABLE LOGIC CONTROLLER – SMALL:

1. Manufacturer: [Square D Modicon Concept].
2. Licenses: [Provide 1 License. Request Owner / City licensee information prior to ordering for registration. Provide one PC to PLC programming cable for each license][Owner has licensed copy for their use].

2.05 SPARE PARTS

The following spare parts shall be provided[, refer to Paragraph 1.01 B for schedule].

A. PROGRAMMABLE LOGIC CONTROLLER – LARGE:

1. One of each unique processor card.
2. One of each unique [remote I/O] and communication card.
3. One for each ten, minimum of one for each unique I/O card.
4. One of each unique power supply.

5. One of each unique pre-fabricated cable.

B. PROGRAMMABLE LOGIC CONTROLLER – SMALL:

1. One of each unique processor card.
2. One of each unique [remote I/O] and communication card.
3. One for each ten, minimum of one for each unique I/O card.
4. One of each unique power supply.
5. One of each unique pre-fabricated cable.

2.06 CONTROL PANEL FABRICATION

A. Refer to Section 27 01 10.

B. Detail shop drawings showing field connections and any terminal block jumpering required.

C. Terminate all used and spare I/O wiring to terminal blocks.

D. Create wire markers with “to-from” component name, PLC slot/base, or terminal column number and terminal number information identical at each end. [For Large PLC I/O Cables, the cable bundle shall also be labeled with “to-from” PLC slot number and terminal column number information identical at each end.]

E. Provide terminal Blocks for field connections to PLC Discrete Inputs:

1. One fused terminal with LED for each group of 8 inputs, connected to control power.

2. Fused terminal connected to eight terminal blocks to provide power to each field input circuit.

3. One terminal per PLC input.

4. One common terminal for each group of 8 inputs, connected to control power common.

F. Provide terminal Blocks for field connections to PLC Discrete Outputs:

1. One fused terminal with LED for each output, connected to control power.
2. [Two terminals per PLC relay output.][Provide interposing relay for each solid-state PLC output. Connect output and control power common to relay coil. Provide two terminals for relay contact, normally opened unless otherwise noted.]

3. One common terminal for each output, connected to control power common.

G. Provide terminal Blocks for field connections to PLC Analog Inputs:

1. One fused terminal with LED for each input, connected to +24 Vdc.

2. Two terminals per PLC input.

3. One common terminal for each input, connected to 24 Vdc common.

4. One ground terminal for each input shield, connected to signal ground bus.

5. Two surge protecting terminals for each field mounted instrument or equipment, grounded to the frame ground bus.

H. Provide terminal Blocks for field connections to PLC Analog Outputs:

1. One fused terminal with LED for each output, connected to +24 Vdc.

2. Two terminals per PLC output.

3. One common terminal for each output, connected to 24 Vdc common.

4. One ground terminal for each output shield, connected to signal ground bus.

5. Two surge protecting terminals for field mounted equipment, grounded to the frame ground bus.

2.07 PRODUCT DATA

The following Product Data shall be provided.

[A. FACTORY ACCEPTANCE TEST RESULTS:

Submit under Section 27 00 30 and per the requirements of this Section.]

[B. OPERATING AND MAINTENANCE INFORMATION:

Operating and maintenance information shall be provided, including the following.

1. Manufacturer, Representative, and Supplier contact information.

2. Manufacturer instruction manuals shall include only the following as applicable to the PLC system:

   a. Safety Precautions.
   b. Environmental Conditions.
   c. Troubleshooting guides and diagnostic techniques.
   d. Component connection diagrams.
   e. Removal and replacement instructions.

3. Warranty information.

4. Final reviewed submittal.

5. As-built drawings with record of switch and jumper settings for all components.

[6. List of spare parts provided.]

[C. PLC PROGRAM – EQUIPMENT MANUFACTURER:

Provide the as-built programmable controller program on a CD, prepared using the software type specified in Part 2. Provide [2] copies. Label the CD to include:

1. Owner's name, facility name, project name and project number as shown on the drawings.

2. "Application Programs For (equipment and/or PLC name)".

3. Programming software name and revision.

4. Supplier name and program revision date.]

PART 3--EXECUTION

3.01 INSTALLATION

Refer to Section 27 01 10.

Connect input and output devices to the PLC via control panel terminal blocks, not directly to the PLC.

3.02 FIELD INSPECTION AND TESTING

A. EQUIPMENT MANUFACTURER AND SYSTEMS INTEGRATOR:

The supplier of each PLC system shall provide a qualified service representative to perform the following:

1. Inspect the PLC installation including I/O and network systems, hardware configuration switch and jumper settings.

2. Monitor all PLC system diagnostic indicators, both hardware and software, and certify that the PLC system performance meets or exceeds the Manufacturer's published specifications.

3. Assist in all testing. The Systems Integrator will provide a minimum of [four] man-weeks on-site for each PLC I/O rack. [Equipment Manufacturers shall provide a minimum of [two] man-days on-site per equipment assembly.]

4. Modify PLC programs as required.

5. Certify in writing to the Construction Manager that the PLC system has been installed and configured in accordance with the Manufacturer's published guidelines. [Equipment Manufacturer certification requirements are per the associated equipment Specification.]

B. CONTRACTOR:

Fault or trouble conditions shall be investigated and resolved by the Contractor to the satisfaction of the PLC supplier.

3.03 TRAINING

A. OPERATIONS AND TROUBLESHOOTING:

[Systems Integrator training is specified in Section 27 09 90.] A minimum of four man-hours on-site including training materials and expenses shall be provided for three maintenance personnel.]

[Equipment Manufacturer training is per the associated equipment Specification.]

[B. PLC PROGRAMMING:

Off-site training shall be provided for AWC's personnel on the operation and troubleshooting of the PLC system and fundamental programming techniques. Training shall be conducted by a certified instructor in the direct employ of the PLC Manufacturer.

The training shall be structured as a lecture/lab course with hands-on lab exercises utilizing PLC system hardware similar to the hardware installed as work of this contract. Hardware simulators and programming terminals shall be furnished by the PLC Manufacturer. A minimum of [three] days of formal training shall be presented.

Travel shall occur one day before and one day after training. Include the cost of training and all expenses for [two] personnel.]

[3.04 PLC INPUT/OUTPUT SUMMARY

The Programmable Logic Controller I/O Summary provides a listing of PLC module requirements, and the assigned input/output points for the specified PLC system. The unassigned PLC I/O points shall be tagged as spare. The Programmable Logic Controller I/O Summary is included in Attachment A at the end of this Specification Section.

A. PROGRAMMABLE LOGIC CONTROLLER I/O SUMMARY:

The Programmable Logic Controller (PLC) I/O Summary provides a listing of the assigned input/output points to the specified PLC system.

The detailed assignment of I/O to specific points is provided for information only and will be revised and modified throughout the project. Final assignments shall be coordinated between the Contractor, the System Integrator, and AWC during Construction.

B. CLARIFICATION OF HEADINGS:

1. SIGNAL: The signal number consists of a two or three letter prefix (indicating the I/O point function) followed by a number identifying the process loop with which the I/O point is associated.

2. DESCRIPTION: Provides an abbreviated description of the function of the I/O point.

3. SOURCE: Identifies field device that I/O point is connected to.

4. DRAWINGS: Identifies the Drawings on which the I/O point is referenced.]

END OF SECTION

SECTION 27 03 30

REMOTE TELEMETRY UNIT

PART 1--GENERAL

1.01 SCOPE

The Remote Telemetry Unit (RTU) shall include a Programmable Logic Controller (PLC) specified in Section 27 03 10 that for process control functions, data acquisition, and communicates with the SCADA system Operators at the Central Control Center (CCC).

The project's RTU, radio, modem, antenna, antenna cables, lightning arrestor, and associated components are specified herein. The work includes installation, testing, commissioning, PLC programming, facility graphics, and training.

The Central Control Center programming and graphics shall be [_____].

[The RTU shall communicate both with the CCC host processor and other RTUs via _____].

[The Radio Path Survey to establish the antenna height, direction, and mounting shall be performed and submitted within 20 days of the Notice-To-Proceed with the project.]

1.02 REFERENCES

A. Refer to Section 27 00 00 for the project scope, the System Integrator requirements, the submittal requirements, product data requirements, and the coordination requirements.

PART 2--PRODUCTS

2.01 MATERIALS AND QUALITY

Equipment material shall be new, free from defects, and industrial-grade, as specified.

A. SCOPE:

This section specifies requirements for a remote terminal unit (RTU) cabinet with programmable logic controller (PLC) designed to execute discrete and continuous control logic with high reliability in industrial applications.

Provide notification of the Factory Acceptance Test with ten days notice to the Owner and Engineer.

B. RTU PRODUCTS:

Provide:

1. NEMA-3R enclosure with:

    a. Two filtered air vents
    b. Two vent fans,
    c. Breather-drain device on bottom of the cabinet.
    d. Inner door for the Operator Interface Device mounting.
    e. [Air conditioning unit sized by the supplier]

2. UL 508A recognized shop fabrication of the RTU with specified products.

3. PLC and software per Section 27 03 10.

4. RTU containing:

    a. UPS backup system rated [500] [ ] VA

    b. 1-hour battery backup

    c. 120Vac input and 120Vac output.

    d. Power distribution with circuit breakers to the instruments and analyzers.

    e. Surge protection for the RTU equipment, as specified.

    f. Surge protection for individual instruments, as specified.

    g. Operator Interface mounted on the inside door of the RTU:

        (1) Modicon PanelView digital display with configuration software and communication drivers.

        (2) Communication Port.

        (3) Programming Port.

        (4) PLC Port.

5. Radio system: Johnson Data Radio, Part No. 242-4016-610, Model T-96SR

6. Antenna system with cables and mast support per drawings.

2.02 PHYSICAL REQUIREMENTS

A. TERMINATIONS:

Customer interconnect to the termination connectors shall accept 16 AWG wires into each position. Quick-disconnect terminations shall be provided to allow disconnecting of the wiring to the terminals.

Remote termination connections shall be provided as DIN rail mount type. Provide individual I/O point fusing, ring lug or spade lug field connections, and relay contacts for discrete outputs.

2.03 RADIO

A. OPERATING FREQUENCIES:

1. [Operate in the 928/952 MHz. frequency band.
   Specifically: Transmit on 928.18125 MHz.
   Receive on 952.18125 MHz.

2. FCC type acceptance under FCC rules Part 94 for operation in a 12.5 KHz bandwidth].

B. ENVIRONMENTAL CONDITIONS:

The RTU shall be able to operate in environments with the following specifications:

1. Temperature range: -30 to +60 deg. C
2. Humidity: 95% at 40 deg. C
3. Shock and Vibration: MIL 810C Spec.

C. TRANSMITTER:

The RTU shall meet the following transmitter requirements:

1. Output Power (at antenna port): 5 Watts (+37DBm) max.

2. Transmitter Attack Time: Less than 1 msec for 90% power within 1 KHz of operation frequency

3. Output Frequency: 928 to 929 MHz

4. Stability: +/-0.00015% from -30 to +60 degrees C (for both 12.5 KHz and 25 KHz channels)

5. Spurious/Harmonic Emissions: 55DB

6. Output Impedance: 50 ohms

7. Modulation Deviation: +/- 5 KHz FM (25 KHz channels), +/- 3 KHz (12.5 KHz channels)

8. Duty Cycle: Continuous

9. Audio Input Level: Adjustable, -20 to +1- DBm for 5 KHz dev.

10. Frequency Response +1 to -3 DB, 20 to 3KHz

11. Time Out Timer: Adjustable (2 to 30 seconds)

12. AFC Circuit: Built in

D. RECEIVER:

The RTU shall meet the following receiver requirements:

1. Sensitivity at the antenna port: 0.3 microvolts (-117 DBm), for 12 DB Sinad

2. Frequency Stability: +/-0.00015% from -30 to +60 degrees C. (for both 12.5 and 25 KHz channels)

3. Frequency Range: 952 to 953 MHz

4. Selectivity: -10 DB minimum at adjacent channel

5. Desensitazation: -70 DB minimum (EIA)

6. Spurious/Image Rejection: -85 DB minimum

7. Audio Output Levels: Adjustable, -20 to +6 DBm

8. Frequency Response: Flat output: +1, -3 DB, 20 to 6000 Hz

   Filtered output: +1, -3 DB, 20 to 3000 Hz

9. AFC Circuit: Built in

10. Intermodulation (EIA): -75 DB, minimum

E. MODEM AND AUXILIARIES DEVICES:

The RTU shall include the following and comply with these general requirements:

1. Input Power: 12 to 14 VDC Nominal

2. Transient Protection: 2500 Volt Isolation on VF I/O; power supply, keying, and alarm circuits.

3. Data Rate: 4800 Baud

4. Built in Modem: 4800 Baud Async Digital Interface. RS232 direct Interface: RTS/CTS time not to exceed 10 msecs.

5. Antenna Connection: Type N, female

6. Unit Housing: Die Cast aluminum enclosure

F. INTERFACE:

The Master Station Radio: Existing MDS-2000-HSU "SMART" unit.

The Remote Station Radio: Provide a Microwave Data Systems Model 9710B. Include LED monitoring devices for communication signals: RTS, CTS, TXD, DCD, RXD.

The radio shall operate in the half duplex mode with the transmitter keying provided by the Remote Terminal Unit.

2.04 ANTENNA

The Broadband Yagi Antenna shall be manufactured by SCALA, model TY-900, and shall meet the following specifications:

1. Frequency Range: 925 to 960 MHz

2. Gain: 10 DB, minimum

3. Maximum Input Power: 150 Watts

4. Lightning Protection: Direct Grounding to mast

5. Front to Back Ratio: 20 DB, minimum

6. Connector: Type N, Female

7. Mounting Hardware: Weatherproof clamp suitable for direct mount to 2 inch SCH, 40 steel pipe

8. VSWR: 1.5:1 max (1.35:1 typ.)

2.05 LIGHTNING ARRESTOR

A. GENERAL:

The lightning arrestor shall be by Polyphaser, model IS-50NX-C2, and shall meet the following requirements:

1. Max. Surge: 50KAmps IEEE 8/20 Waveform (based on IEEE Std. 28-1974 and ANSI C62.1)

2. Turn on VDC: 60 V. Typical

3. Turn On Time: 7ns after DC Threshold (based on 1 KV/nS waveform

4. Impedance: 50 Ohms

5. Frequency Range: 900 to 1000 MHz.

6. VSWR: <=1.1 to 1 over operating Bandwidth

7. Insertion loss: <=0.1DB over operating Bandwidth

8. Temperature Range: 60 to -30 degrees C.

B. CONNECTIONS:

The Arrestor shall have male Type N connectors for the input and the output.
The Arrestor shall have a flange mounting arrangement to aid connection to ground.
The Arrestor shall be in a conductive, metallic enclosure.

C. ANTENNA CABLE:

The antenna cable shall be 1/2” foam dielectric, manufactured by Andrews Heliax, part number LDF5-50A. Two Andrew type L44PLU “N” male connectors

2.06 POWER SUPPLY

A. Single output series power supply

1. Output: 12VDC, 3.4 Amp.
2. Input: 115VAC
3. Newark Catalog #89F1271

B. Single output series power supply

1. Output: 24VDC, 3.6 Amp.
2. Input: 115VAC
3. Newark Catalog #89F1264

C. Two gell cell batteries

1. 12VDC
2. 6 Amp/hr.
3. Operable to 140 Deg. F.
4. Newark Catalog #99F1805

2.07 RECORD DRAWINGS

Submittal drawings shall be provided as record drawings. The drawings shall be updated to indicate the final PLC system configuration including bill of materials, module layout for each chassis, individual module configuration switch settings, jumper positions, and final addressing of all communication network nodes.

PART 3--EXECUTION

3.01 INSTALLATION AND TESTING

Installation, testing, and commissioning of the RTU and auxiliary equipment shall be as specified in Section 27 00 00, as specified herein, and shall be coordinated with Arizona Water Company (AWC).

The Contractor is responsible for the overall functioning of the system and shall ensure that each device is properly installed, without damage, and without the violation of manufacturers' warranties and installation instructions. Installation shall be under the direction of factory trained personnel.

3.02 INSTALLATION SERVICES

On-site inspection, testing, and certification of the completed PLC system installation shall be provided. Fault or trouble conditions shall be investigated and resolved by the Contractor to the satisfaction of the PLC manufacturer.

3.03 PROGRAMMING AND START-UP

[_____] shall provide programming of the RTUs and configuration of the Master SCADA node.

Provide 5 days of on-site start-up service and assistance to AWC for testing and debugging of the control system and RTU interface.

END OF SECTION

SECTION 31 22 13 - ROUGH GRADING

PART 1 GENERAL

1.1 SUMMARY

A. This Section includes rough grading and filling associated with contouring of Site in preparation for building excavation and subsequent site work.

B. Section Includes:

1. Excavating topsoil
2. Excavating subsoil
3. Cutting, grading, filling, and rough contouring of Site

C. Related Sections:

1. Section 31 05 13, Soils for Earthwork
2. Section 31 05 16, Aggregates for Earthwork
3. Section 31 23 17, Trenching

1.2 REFERENCES

A. ASTM International (ASTM):

1. ASTM C136 - Standard Test Method for Sieve Analysis of Fine and Coarse Aggregates
2. ASTM D698 - Standard Test Method for Laboratory Compaction Characteristics of Soil Using Standard Effort (12,400 ft-lbf/ft3 (600 kN-m/m3))
3. ASTM D2419 - Standard Test Method for Sand Equivalent Value of Soils and Fine Aggregate
4. ASTM D2434 - Standard Test Method for Permeability of Granular Soils (Constant Head)
5. ASTM D6938 - Standard Test Method for In-Place Density and Water Content of Soil and Soil-Aggregate by Nuclear Methods (Shallow Depth)
6. ASTM D3017 - Standard Test Method for Water Content of Soil and Rock in Place by Nuclear Methods (Shallow Depth)

1.3 SUBMITTALS

A. Section 01 33 00, Submittal Procedures: Requirements for submittals.

B. Soils for Earthwork: As specified in Section 31 05 13, Soils for Earthwork.

C. Aggregates for Earthwork: As specified in Section 31 05 16, Aggregates for Earthwork.

1.4 CLOSEOUT SUBMITTALS

A. Project Record Documents: Accurately record actual locations of utilities remaining by horizontal dimensions, elevations or inverts, and slope gradients.

1.5 QUALITY ASSURANCE

A. Perform Work in accordance with ASTM C136, ASTM D2419, and ASTM D2434.

PART 2 PRODUCTS

2.1 MATERIALS

A. Subsoil Fill: Type S1 and S2 as specified in Section 31 05 13, Soils for Earthwork.

B. Topsoil: As specified in Section 31 05 13, Soils for Earthwork.

1. Type TS1, Select Native Topsoil Material, as may be available.

2. Type TS2, Imported Topsoil Material, as may be required.

C. Structural Fill: Type A1, Dense-Graded Aggregate as specified in Section 31 05 16, Aggregates for Earthwork.

D. Granular Fill: Type A2, Granular Backfill Material as specified in Section 31 05 16, Aggregates for Earthwork.

PART 3 EXECUTION

3.1 EXAMINATION

A. Verify survey benchmark and intended elevations for the Work are as indicated on Drawings.

3.2 PREPARATION

A. Call Arizona 811 not less than 3 working days before performing Work.

1. Request underground utilities to be located and marked within and surrounding construction areas.

2. Notify Engineer of any potential conflicts resulting from utility locations and the Drawings.

3. Notify utility company to remove and relocate utilities, as may be necessary.

B. Identify required lines, levels, contours, and datum.

3.3 TOPSOIL EXCAVATION

A. Excavate and stockpile topsoil as specified in Section 31 05 13, Soils for Earthwork.

3.4 SUBSOIL EXCAVATION

A. Excavate subsoil from areas to be further excavated, re-landscaped, or re-graded as shown on the Drawings.

B. When practical, do not excavate wet subsoil. When wet subsoil must be excavated and is to be reused on site for the Work, process wet material to obtain optimum moisture content.

C. Stockpile excavated material in area designated onsite in accordance with Section 31 05 13, Soils for Earthwork.

D. When excavating through roots, perform Work by hand and cut roots with sharp axe.

E. Excavations that are 20 feet deep or less shall be constructed in accordance with Occupational Safety and Health Administration (OSHA) Standards for "Type C" soils. This corresponds to a temporary side slope of 1.5:1 (horizontal to vertical) or flatter for soils in sloped excavations.

1. Soil classification and excavation performance shall be evaluated in the field by the geotechnical engineer.

2. Excavations deeper than 20 feet shall be evaluated by the contractor's engineer based on alignment-specific soil properties and settlement-sensitive features.

F. Stability: Replace damaged or displaced subsoil as specified for fill.

3.5 FILLING

A. General:

1. Grading and filling operations shall not take place when weather conditions and moisture content of fill materials prevent the attainment of specified density.

2. Vertical curves or roundings at abrupt changes in slope shall be established as approved by Engineer.

3. Bring all graded areas to a relatively smooth, even grade and slope by blading or dragging. Remove high spots and fill depressions.

B. Fill areas to contours and elevations shown on the Drawings with unfrozen materials.

C. Topsoil Fill:

1. Scarify prepared subgrade to depth of 4 inches immediately prior to placing topsoil.

2. Place topsoil in areas to be seeded to depths indicated on the Drawings, minimum depth of 6 inches.

3. Place topsoil material loose; do not compact, do not place in wet or muddy conditions.

4. To minimize corrosion of buried metallic utilities, topsoil, organic soils, existing fill soils, and mixtures of sand and clay shall not be placed adjacent to buried metallic utilities.

D. Place material in continuous layers as follows:

1. Subsoil Fill: Maximum 8 inches compacted depth.

2. Structural Fill: Maximum 12 inches compacted depth.

3. Granular Fill: Maximum 12 inches compacted depth.

E. Maintain optimum moisture content of fill materials to attain required compaction density.

F. Slope grade away from building minimum 2 percent slope for minimum distance of 10 feet, unless noted otherwise.

G. Make grade changes gradual. Blend slope into level areas.

H. Repair or replace items indicated on the Drawings to remain which are damaged by excavation or filling. All costs shall be borne by the Contractor.

3.6 TOLERANCES

A. Top Surface of Subgrade: Plus or minus 1/10 of a foot from required elevation.

3.7 FIELD QUALITY CONTROL

A. Perform laboratory material tests in accordance with AASHTO T99.

B. Perform in place compaction tests in accordance with the following:

1. Density Tests: ASTM D6938

2. Moisture Tests: ASTM D3017

C. Frequency and location of testing is dependent upon type of material placed. See Section 01 45 00, Quality Control for testing requirements.

D. When tests indicate Work does not meet specified requirements, remove Work, replace, and retest at the sole expense of the Contractor.

END OF SECTION

SECTION 31 23 17 - TRENCHING

PART 1 GENERAL

1.1 SUMMARY

A. This Section includes the requirements for excavation and backfill of all utilities, including installation of pipe bedding, pipe zone backfill, trench backfill, and related Work as shown on the Drawings and as specified.

B. Section includes:

1. Excavating trenches for pipe, utility vaults, and other utilities.
2. Compacted fill from top of utility bedding to final grades.
3. Trench and utility vault backfilling and compaction.

C. Related Sections:

1. Section 01 45 00, Quality Control
2. Section 03 30 00, Cast-In-Place Concrete
3. Section 31 05 13, Soils for Earthwork
4. Section 31 05 16, Aggregates for Earthwork
5. Section 31 22 13, Rough Grading
6. Section 31 37 00, Riprap

D. Geotechnical Evaluation, prepared by Ninyo & Moore.

1.2 REFERENCES

A. ASTM International (ASTM):

1. ASTM C403 - Standard Test Method for Time of Setting of Concrete Mixtures by Penetration Resistance
2. ASTM D698 - Standard Test Method for Laboratory Compaction Characteristics of Soil Using Standard Effort (12,400 ft-lbf/ft3
3. ASTM D6938 - Standard Test Method for In-Place Density and Water Content of Soil and Soil-Aggregate by Nuclear Methods (Shallow Depth)
4. ASTM D3017 - Standard Test Method for Water Content of Soil and Rock in Place by Nuclear Methods (Shallow Depth)
5. D4832, Standard Test Method for Preparation and Testing of Controlled Low Strength Material (CLSM) Test Cylinders

1.3 DEFINITIONS

A. Controlled Low Strength Material (CLSM): Also referred to as Flowable Fill. Lean cement concrete fill. A self-compacting, cementitious material.

B. Flexible Pipe: For the purposes of these Specifications, tubing between 1/2-inch and 4-inch diameter constructed of polyvinyl chloride (PVC) and high-density polyethylene (HDPE) are considered flexible pipes. HDPE piping 4 inches in diameter and larger is also considered flexible pipe.

C. Geosynthetics: Geotextiles, geogrids, geomembranes, and drainage composite materials.

D. Imported Material: Materials obtained from sources offsite, suitable for specified use.

E. Lift: Loose (uncompacted) layer of material.

F. Obstructions: Items which may be encountered during utility and vault trenching which do not require replacement.

G. Optimum Moisture Content:

1. Determined in accordance with ASTM Standard specified to determine maximum dry density for relative compaction.

2. Determine field moisture content on basis of fraction passing 3/4-inch sieve.

H. Pipe Bedding: Trench backfill zone for full trench width which extends from the bottom outside surface of the pipe to a minimum of 4 inches, or 1/12 of the outside diameter of the pipe, whichever is greater, below the bottom outside surface of pipe, conduit, cable, or duct bank to the trench foundation so as to uniformly support the barrel of the pipe.

I. Pipe Zone: Trench backfill zone for full trench width which extends from the bottom outside surface of the pipe to a minimum of 12 inches above the top outside surface of pipe, conduit, cable, or duct bank.

J. Pipe Bedding, Pipe Zone, and Trench Backfill Classifications:

1. Class A: Backfill with suitable native or imported material that is approved to meet the characteristics required for the specific surface loading or other criteria of the backfill zone.

2. Class B: Backfill with imported granular material consisting of gravel or crushed rock meeting the requirements of this Section and Coarse Aggregate Type A1 as specified in Section 31 05 16, Aggregates for Earthwork; typical designated size shall be 1-inch-0 or 3/4-inch-0.

3. Class C: Backfill with Fine Sand, as specified in Section 31 05 16, Aggregates for Earthwork.

4. Class D: Backfill with approved pit run or bar run material, well-graded from coarse to fine; maximum dimension shall be 3 inches.

5. Class E: Backfill with CLSM. See Section 31 23 24, Flowable Fill.

K. Pothole Excavations: Removal and replacement of all materials via coring, vacuum extraction, or similar method for the purposes of locating an underground utility and to investigate underground conditions.

L. Prepared Trench Bottom: The bottom of the trench on which the pipe bedding is to lie, and which provides support for the pipe.

M. Relative Compaction: Ratio, in percent, of as-compacted field dry density to laboratory maximum dry density as determined in accordance with ASTM Standards.

N. Rigid Pipe: For the purposes of these Specifications, pipe constructed of PVC, ductile iron, steel, concrete, and clay pipes are considered rigid pipes.

O. Sewer, Pipes, and Mains: Conduits of circular or other geometric shapes, used to convey liquids or gases, or other material.

P. Trench Backfill: Trench backfill zone for full trench width extending from the top of the pipe zone to pavement base rock, ground surface, or other surface material.

Q. Trench Stabilization: Removal of unsuitable material in the bottom of a trench and replacement with specified material for support of a pipe, main, conduit, structure, or appurtenances.

R. Utility: Any buried pipe, duct, conduit, or cable.

S. Well-Graded: A mixture of particle sizes with no specific concentration or lack thereof of one or more sizes that, when compacted, produces a strong and relatively incompressible soil mass free from detrimental voids.

1.4 SUBMITTALS

A. Section 01 33 00, Submittal Procedures: Requirements for submittals.

B. Excavation Protection Plan: At a minimum, to include the following:

1. Methods and sequencing of mass excavation.

2. Proposed on-site and off-site spoil disposal locations.

3. Anticipated difficulties and proposed resolutions.

4. Proposed routes for COMPANY's access to COMPANY's facilities impacted by excavation Work.

5. Proposed haul routes.

C. Product Data:

1. Marking tapes

2. Tracer wire

3. Connectors for tracer wire and/or marking tapes

4. Tracer wire locate boxes

D. Imported Materials:

1. Materials Source: Submit name and location of imported fill materials suppliers.

2. Manufacturer's Certificate: Certify Products meet or exceed specified requirements.

3. Submit results of aggregate sieve analysis and standard proctor test for granular material.

E. Concrete: Mix designs in accordance with Submittal requirements of Section 03 30 00, Cast-in-Place Concrete.

1.5 QUALITY ASSURANCE

A. Subsoil and topsoil fill materials: In accordance with Quality Assurance requirements stated in Section 31 05 13, Soils for Earthwork.

B. Aggregate fill materials: In accordance with Quality Assurance requirements stated in Section 31 05 16, Aggregates for Earthwork.

C. CLSM:

1. In-place testing: In accordance with ASTM C403.

2. Compressive testing: In accordance with ASTM D4832.

D. Allowable Tolerances: Final grades shall be plus or minus 0.1-foot.

1.6 QUALIFICATIONS – NOT USED

1.7 COORDINATION

A. Verify Work associated with lower elevation utilities is complete before placing higher elevation utilities.

B. Coordinate trenching and utility installation work with other work at utility construction location occurring near or adjacent to specified herein.

PART 2 PRODUCTS

2.1 FILL MATERIALS

A. Pipe Bedding: Type A2, Granular Backfill Material as specified in Section 31 05 16, Aggregates for Earthwork.

B. Trench Backfill: Type S1, Select Native Material as specified in Section 31 05 13, Soils for Earthwork.

C. Concrete: Structural concrete as specified in Section 03 30 00, Cast-in-Place Concrete with compressive strength of 3,000 psi.

D. Sand: As specified in Section 31 05 16, Aggregates for Earthwork.

2.2 MARKING TAPE

A. Detectable:

1. Solid aluminum foil, visible on unprinted side, encased in protective high visibility, inert polyethylene plastic jacket.

2. Foil Thickness: Minimum 0.35 mils.

3. Laminate Thickness: Minimum 5 mils.

4. Width: 6 inches.

5. Identifying Lettering: Minimum 1-inch high, permanent black lettering imprinted continuously over entire length.

   a. Imprinted "Arizona Water Company"

6. Joining Clips: Tin or nickel-coated furnished by Tape Manufacturer.

7. Manufacturers and Products:

   a. Reef Industries; Terra Tape, Sentry Line Detectable

   b. Northtown Company; Detectable Tape

B. Color: In accordance with APWA Uniform Color Code for Temporary Marking of Underground Facilities and as specified in NEMA Z535.1, Safety Color Code.

Color	Facility
Red	Electric power lines, cables, conduit, and lightning cables
Orange	Communicating alarm or signal lines, cables, or conduit
Yellow	Gas, oil, steam, petroleum, or gaseous materials
Green	Sewers and drain lines
Blue	Potable water
Purple	Reclaimed water, irrigation, and slurry lines

2.3 ELECTRONIC LOCATING MATERIALS

A. Tracer Wire:

1. Direct buried No. 12 AWG solid, annealed copper-clad steel (CCS) high strength tracer wire.

2. Tensile Breaking Load: 380-pound average.

3. Jacket:

   a. High molecular weight high-density polyethylene complying with ASTM D1248, 30-volt rating.

   b. Color: Provide in colors per Article 2.03.B above.

4. Manufacturer and Product: Copperhead Industries; LLC, 12 CCS high strength reinforced tracer wire, or equal.

B. Tracer Wire Connectors:

1. Waterproof, corrosion proof and suitable for No. 12 AWG solid core wire.

2. Prefilled with silicone and suitable for use with low-voltage tracer lines of less than 50 volts.

3. Lug Connectors:

a. Waterproof plastic housing that encases the silicone prefilled lug terminals.

b. Manufacturer and Product: King Innovations; DryConnTM Direct Bury Lug or equal.

4. Twist Connectors:

a. Waterproof epoxy-filled packaging that encases the silicone prefilled twist connectors.

b. Manufacturer and Product: 3M Division; DBY Direct Bury Splice Kit 09053 connectors or equal.

2.4 VISUAL IDENTIFICATION MATERIALS

A. Tracer Wire Locate Boxes:

1. Material: Polyolefin.

2. Cover:

a. Color: Provide in colors per Article 2.03.B above.

b. Provide box cover identification marking for facility type such as “Water Locate Wire”, as approved by COMPANY.

c. Locking type with a nominal 6-inch opening.

3. Manufacturer and Product: Oldcastle Carson Model 708, or equal.

PART 3 EXECUTION

3.1 PREPARATION

A. Call Arizona 811 not less than three working days before performing Work.

1. Request underground utilities to be located and marked within and surrounding construction areas.

2. Coordinate with and notify utility companies should it be necessary to remove or relocate facilities.

3. Maintain and protect above and below grade utilities indicated to remain.

B. Identify required lines, levels, contours, and datum locations.

C. Drawings and/or Specifications cover and govern replacement and restoration of foreseeable damage.

D. The site of an open cut excavation shall be first cleared of all obstructions preparatory to excavation.

E. Potholing / Exploratory Test Pits: Dig such exploratory test pits and perform potholing as may be necessary in advance of trenching to determine the exact location and elevation of subsurface structures, pipelines, duct banks, conduits, and other obstructions which are likely to be encountered or need to be connected to and shall make acceptable provision for their protection, support, and maintenance of their continued operation.

F. Paved or Surfaced Streets:

1. Wherever paved or surfaced streets are cut, saw wheel, or approved cutting devices shall be used.

2. Width of pavement cut shall be as shown on the Drawings.

3. Any cut or broken pavement shall be removed from site during excavation.

G. Traffic:

1. Maintain street traffic at all times as required by the Drawings and as specified herein.

2. Erect and maintain barricades, warning signs, traffic cones, and other safety devices during construction in accordance with the latest edition of Manual of Uniform Traffic Control Devices (MUTCD), Part 6, to protect the traveling public in any area applicable.

3. Provide flaggers as required during active work in roadway areas.

H. Operations shall be confined to rights-of-way and easements provided. Avoid encroachment on, or damage to, private property or existing utilities unless prior arrangements have been made with copy of said arrangement submitted to Engineer.

3.2 EASEMENTS

A. Where portions of the Work are located on private property, easements and permits will be obtained by COMPANY. Easements shall provide for the use of property for construction purposes to the extent indicated on the easements.

B. Copies of these easements and permits will be available from COMPANY for inspection by the Contractor. It shall be the Contractor's responsibility to determine the adequacy of the easement obtained in every case.

C. Confine construction operations to within the easement limits or street right-of-way limits or make special arrangements with the property owners for the additional area required and notify the Engineer with a copy of the written approval from property owners of any such conditions.

D. Any damage to private property, either inside or outside the limits of right-of-way or easements provided by COMPANY, resulting from Work shall be the responsibility of the Contractor. Before the Engineer will authorize final payment, the Contractor will be required to furnish COMPANY with written releases from property owners where the Contractor has obtained special agreements or easements or where the Contractor's operations, for any reason, have not been kept within the construction right-of-way obtained by COMPANY.

3.3 PROTECTION

A. Existing Facilities:

1. It is the intent of these specifications that all streets, structures, and utilities be left in a condition equal to or better than original condition at the completion of the Project.

2. Where damage occurs, and cannot be repaired or replaced, the Contractor shall purchase and install new material to the satisfaction to the Engineer.

3. Drawings and/or specifications cover and govern replacement and restoration of foreseeable damage.

B. Removal of Water:

1. At all times during construction provide and maintain ample means and devices with which to remove promptly and dispose of properly all water entering the excavations or other parts of the Work.

2. Keep all excavations dry until the utilities or vaults to be placed therein are completed. In water bearing sand, well points and/or sheeting shall be supplied, together with pumps and other appurtenances of ample capacity to keep the excavation dry as specified.

3. Dispose of water from the Work in a suitable legal manner without damage to adjacent property or structures.

C. Trench Protection:

1. Provide the materials, labor, and equipment necessary to protect trenches at all times.

2. Trench protection shall provide safe working conditions in the trench and protect the Work, existing property, utilities, pavement, etc.

3. The method of protection shall be according to the Contractor's design.

4. The Contractor may elect to use a combination of shoring, overbreak, tunneling, boring, sliding trench shields, or other methods of accomplishing the work provided the method meets the approval of all applicable local, state, and federal safety codes.

5. Damages resulting from improper shoring, improper removal of shoring, or from failure to shore shall be the sole responsibility of the Contractor.

3.4 LINES AND GRADES

A. Trench excavation for piping, utility vaults, and other utilities shall be performed to the alignment and grade as indicated on the Drawings.

B. Where grades are not shown on the Drawings, utilities shall be laid to grade between control elevations shown.

C. Water mains shall be installed with a minimum cover of 36 inches.

D. The Engineer reserves right to make changes in lines, grades, and depths of utilities when changes are required for Project conditions.

E. Changes in the grade and horizontal alignment of the pipeline as shown on the Drawings or as provided elsewhere in the Specifications may be necessary due to unanticipated interferences or other reasons.

1. No additional compensation will be allowed the Contractor for changes in horizontal alignment.

2. No additional compensation will be allowed for changes in grade which require additional depth of trench excavation and backfill up to 2 feet from those shown on the Drawings.

F. Use laser-beam instrument with qualified operator to establish lines and grades.

3.5 OBSTRUCTIONS

A. Obstructions to the construction of the trench, such as tree roots, stumps, abandoned pilings, abandoned buildings and concrete structures, logs, rubbish, and debris of all types shall be removed without additional compensation from COMPANY.

B. The Engineer may, if requested by the Contractor or COMPANY, make changes in the trench alignment to avoid major obstructions if such alignment changes can be made within the perpetual easement and right-of-way and without adversely affecting the intended function of the facility or increasing costs to COMPANY.

3.6 INTERFERING ROADWAYS AND STRUCTURES

A. Remove, replace and/or repair any damage done during trenching activities to fences, buildings, cultivated fields, drainage crossings, and any other properties without additional compensation from COMPANY.

1. Replace or repair these structures to a condition as good as or better than their pre-construction condition prior to commencing work in the area.

B. Paved Roadways:

1. Where paved roadways are cut as part of trenching activities, Class D trench backfill will be required to the bottom of pavement base.

2. New pavement shall be equal to or better than the existing paved surface.

3. New surface shall not deviate by more than 1/4-inch from the existing finish elevation.

C. Existing Structures:

1. If existing structures are encountered as part of trenching activities which will prevent construction and are not adequately shown on the Drawings, the Contractor shall notify the Engineer before continuing with the Work.

2. The Engineer may make such field revisions to the utility alignment as necessary to avoid conflict with the existing conditions.

3. The cost of waiting or "down time" during such field revisions shall be borne by the Contractor without additional cost to COMPANY or liability to the Engineer.

4. If the Contactor fails to so notify the Engineer when a conflict of this nature is encountered, but proceeds with construction despite this interference, the Contractor shall do so at the Contractor's own risk with no additional payment.

3.7 TRENCHING

A. Excavate subsoil as required for construction of utilities to elevations shown on the Drawings.

B. Remove boulders and rock up to 1/2 cubic yard measured by volume per the requirements of this Section.

C. Open Trench Limit:

1. Do not advance open trench beyond the distance which will be backfilled and compacted the same day.

2. A maximum length of open trench shall not exceed 100 feet at any one time.

3. Temporary resurfacing shall be completed within 300 feet of the associated open trench limit for each main pipe laying operation.

4. Cover or backfill excavations at the end of each day.

5. If the trench is not backfilled at the end of each working day:

a. Provide means to prevent caving of excavation sides, as necessary, during non-working hours.

b. Cover the excavation with a system as needed to provide public safety and prevention of entry during non-working hours.

c. Provide signed and stamped submittal of caving prevention system and cover system.

6. New trenching shall not be started when earlier trenches need backfilling, or the surfaces of streets or other areas need to be restored to a safe and proper condition.

D. Utility Crossings: Avoid horizontal and vertical conflicts with existing utilities.

1. Perform excavation within 24 inches of existing utility service in accordance with utility's requirements.

2. Vertical clearance between the new pipe and existing utilities shall be 12 inches minimum, unless otherwise noted on the Drawings.

3. Where existing utility lines are damaged or broken during trenching activities, the utility shall be repaired or replaced. For water or sewer bearing lines, care being taken to insure a smooth flow line and absolutely no leakage at the new joints.

4. All expenses involved in the repair or replacement of leaking or broken utility lines that have occurred due to the Contractor's operations shall be borne by the Contractor, and the amount thereof shall be absorbed in the unit prices of its bid.

E. Water Lines Crossing Sewer Lines: Whenever water lines cross sewer lines, the Contractor shall comply with local Health Department requirements.

1. Wherever possible, the bottom of the water line shall be 24 inches or more above the top of sewer pipe. One full length of the water line pipe shall be centered at the crossing.

2. For clearances less than 24 inches, the Contractor shall replace the existing sewer pipe with ductile iron or PVC of equal size, centered at the utility crossing, or shall encase existing sewer pipe with concrete for a minimum of 10 feet on both sides of crossing, as directed by the Engineer, at no additional cost to COMPANY.

F. Excavate trenches to width and depth as indicated on Drawings. No additional payment will be provided for trenching activities beyond dimensions shown on the Drawings.

1. Excavation for trenches in which pipelines are to be installed shall provide adequate space for workers to place and joint the pipe properly and safely, but in every case the trench shall be kept to a minimum width.

2. The width of the pipe trench at and below the top of the pipe shall be such that the clear space between the barrel of the pipe and the trench shall not exceed 16 inches on either side of the pipe for rigid pipes less than 18 inches in diameter.

3. Excavation for utility vaults and other structures shall be wide enough to provide 18 inches between the structure surface and the sides of the excavation.

4. For pipe or utility vaults to have bedding material, excavate to a depth of 4 inches below the bottom of the pipe or utility vault, or 1/12 of the outside diameter of the pipe, whichever is greater. Care shall be taken not to excavate below depths required.

5. If over digging occurs, the trench bottom shall be filled to grade with compacted bedding material.

G. Remove water or materials that interfere with Work.

1. The trench at all times shall be kept free from water to facilitate fine grading, the proper laying and joining of pipe, and prevention of damage to completed joints.

2. Adequate pumping equipment shall be provided to handle and dispose of the water without damage to adjacent property.

3. Water in the trench shall not be allowed to flow through the pipe while construction work is in progress unless special permission to do so has been given by the Engineer.

4. An adequate screen shall be provided to prevent the entrance of objectionable material into the pipe.

5. Remove and dispose of existing abandoned sewer pipe, structures, and other facilities as necessary to construct the improvements.

    a. Where the excavation activities require the removal of portions of an abandoned pipeline, masonry plugs shall be installed in the open ends of the pipe, unless otherwise noted on the Drawings or by the Engineer.

    b. Coordinate with Engineer prior to plugging.

    c. For plugs less than 36 inches in diameter, 8-inch-deep masonry units shall be used. For plugs in larger pipelines, 12-inch-deep masonry units shall be used.

6. The costs associated with the removal of water and materials noted above will be considered incidental to trench excavation and backfill.

H. Do not interfere with 45 degree bearing splay of foundations.

I. Over-excavation for Unsuitable Trench Foundation Conditions:

1. Cross-sectional dimensions and depths of excavations shown on the Drawings shall be subject to such changes as may be found necessary by the Engineer to secure foundations free from soft, weathered, shattered, and loose material or other objectionable materials.

2. Unsuitable materials shall be removed and replaced only as directed in writing by Engineer.

3. Unsuitable materials encountered shall be removed and replaced with Coarse Aggregate Type A1, 2-1/2-inch – 0 gradation, as specified in Table 31 05 16-A of Section 31 05 16, Aggregates for Earthwork. All material placed shall be compacted to 95 percent of maximum dry density.

4. Install nonwoven geotextile under trench stabilization material, over the soft or yielding excavated surface.

    a. Install the nonwoven geotextile ahead of placement of the trench stabilization material, continuously along the excavation bottom and centered on the pipe centerline.

    b. Use nonwoven geotextile width equal to the pipe diameter plus 2 feet.

    c. Place laps or splices in the geotextile in the direction of the pipe laying.

J. Trim excavation. Hand trim for bell and spigot pipe joints. Remove loose matter.

K. Excavated material shall be placed at locations and in such a manner that it does not create a hazard to pedestrian or vehicular traffic or interfere with the function of existing drainage facilities or system operation.

L. Remove excess subsoil not intended for reuse from site.

M. Stockpile excavated material in area designated on site in accordance with Section 31 05 13, Soils for Earthwork.

3.8 TUNNELING

A. In lieu of open cut trenching as specified above, the Contractor may utilize tunnel methods for installation of pipe where ground conditions are favorable and such methods will not disturb foundations under curbs, sidewalks, and other structures.

1. The Engineer must approve tunneling methods prior to utility installation.

2. Where tunneling is used, payment for the pipe installation will be made for the equivalent trench excavation and backfill as if the open cut method was used. Payment will not be made for surface restoration including pavement, curbs, sidewalks, and other surface improvements whose replacement is avoided by the tunneling method.

3.9 SHEETING AND SHORING

A. Sheet, shore, and brace excavations to prevent danger to persons, new and existing structures, and adjacent and neighboring properties and to prevent caving, erosion, settlement, and loss of surrounding subsoil.

B. Support trenches more than 5 feet deep excavated through unstable, loose, or soft material. Provide sheeting, shoring, bracing, or other protection to maintain stability of excavation.

C. Repair damage caused by failure of the sheeting, shoring, or bracing and for settlement of filled excavations or adjacent soil.

D. Repair damage to new and existing Work from settlement, water or earth pressure or other causes resulting from inadequate sheeting, shoring, or bracing.

E. Design sheeting and shoring to be removed at completion of excavation work, unless shown otherwise on the Drawings.

F. Construction Sheeting Left in Place:

1. Furnish, install, and leave in place construction sheeting and bracing when specified or when indicated or shown on the Drawings.

2. Construction sheeting and bracing originally intended for temporary installation, placed by the Contractor to protect adjacent and neighboring structures, may be left in place if desired by the Contractor and approved by the Engineer. All such sheeting and bracing left in place shall be included in the cost for excavation.

3. Any construction sheeting and bracing which the Contractor has placed to facilitate its work may be ordered in writing by the Engineer to be left in place. The right of the Engineer

to order sheeting and bracing left in place shall not be construed as creating an obligation on its part to issue such orders. Failure of the Engineer to order sheeting and bracing left in place shall not relieve the Contractor of its responsibility under the contract.

4. For sheeting and shoring to be left in place as part of the completed Work, cut off minimum 18 inches below finished grade.

3.10 COMPACTION

A. Testing will be required to show specified densities of compacted backfill are being achieved by the Contractor's compaction methods.

B. Moisture Control:

1. Moisture condition backfill material to within 2 percent of optimum moisture content required for compaction throughout each lift of the fill.

2. Add moisture to granular backfill by sprinkling during compaction operation.

3. Compaction by ponding or jetting is not permitted.

C. Compact all materials and areas that are not accessible for in-place density testing, as determined by the Engineer, in place by whatever equipment and method is practicable or specified, and as approved by the Engineer.

1. Perform compaction at such moisture content as is required to produce well-filled, dense, and firm material in place that will show no appreciable deflection or reaction under the compacting equipment.

3.11 BEDDING

A. All utility vaults, potable water pipe 4-inch nominal diameter and over, all steel pipe, all concrete sewer pipe, all plastic pipe, all pipe under existing or future structures or roadways, and any and all utilities at a depth greater than 6 feet shall be laid in pipe bedding material.

B. Unless otherwise noted on the Drawings, pipe, or conduit of less than 4-inch diameter, outside structure lines and at a depth of less than 6 feet shall be bedded in native material properly shaped as specified below, all as detailed on the Drawings.

C. Compacted bedding material shall be placed the full width of the excavated trench to a depth as shown on the trench detail included on the Drawings.

1. In lieu of a detail, the depth shall be 4 inches, or 1/12 of the outside diameter of the pipe, whichever is greater.

D. Spread the bedding smoothly over entire width of trench to the proper grade so that the pipe is uniformly supported along the barrel.

E. Hand grade and compact each lift to provide a firm, unyielding surface along the entire pipe length. For rigid pipe, compact to at least 95 percent relative compaction.

F. Excavate bell holes at each joint to permit proper assembly and inspection of the joint.

G. Check grade and correct irregularities in bedding material.

H. Center pipes horizontally in trench width.

3.12 BACKFILLING

A. Backfill trenches to contours and elevations with unfrozen fill materials.

B. Systematically backfill to allow maximum time for natural settlement. Do not backfill over porous, wet, frozen, or spongy subgrade surfaces.

C. Maintain optimum moisture content of fill materials to attain required compaction density.

D. Place fill material, with the exception of CLSM, in continuous layers and compact in 6- to 8-inch lifts.

1. Prevent pipe from moving either horizontally or vertically during placement and compaction of pipe zone material.

2. Where trenches are under existing or future structures, paved areas, road shoulders, driveways, or sidewalks, or where designated on the Drawings or specified elsewhere in these specifications, the trench backfill shall be Class B or Class E and pipe zone backfill shall be Class B or Class E. Class B backfill shall be compacted to 100 percent of maximum density at optimum moisture content within two feet below pavement and 95 percent of maximum density at optimum moisture content deeper than two feet below pavement.

3. Where trenches are outside existing or future structures, paved areas, road shoulders, driveways, or sidewalks, or where designated on plans or specified elsewhere, the trench backfill shall be Class A and pipe zone backfill in these areas shall be Class B. For these locations, compaction of Class B backfill shall be 95 percent of maximum density at optimum moisture content.

E. Employ placement method that does not disturb or damage nearby or adjacent foundation perimeter drainage or utilities in trench.

F. Do not use power-driven impact compactors to compact pipe zone material.

G. Backfill Immediately: All trenches and excavations shall be backfilled immediately after pipe or conduit is in approved condition to receive it and shall be carried to completion as rapidly as possible, unless otherwise directed by the Engineer.

H. Under no circumstances shall water be permitted to rise in open trenches after pipe has been placed.

I. Do not allow backfill material to free fall into the trench or allow heavy, sharp pieces of material to be placed as backfill until after at least 2 feet of backfill has been provided over the top of pipe.

J. Use hand compactors for compaction until at least 2 feet of backfill is placed over top of pipe. Thoroughly tamp each lift, including area under haunches, with handheld tamping bars supplemented by “walking in” and slicing material under haunches with a shovel to ensure that voids are completely filled before placing each succeeding lift.

K. Placement of Sand:

1. Place medium sand in lifts not exceeding 8 inches in uncompacted thickness.

2. Compact each lift to a minimum of 95 percent relative compaction prior to placing succeeding lifts.

L. Placement of CLSM:

1. Discharge from truck-mounted drum-type mixer into trench.

2. Place in lifts not exceeding 2 feet in thickness.

3. No compaction of CLSM is allowed.

4. Use steel plates to protect the CLSM from traffic a minimum of 24 hours. After 24 hours, the CLSM may be paved, or opened to traffic until permanent surface restoration is completed if it has hardened sufficiently to prevent rutting.

M. New trenching shall not be started when earlier trenches need backfilling, or the surfaces of streets or other areas need to be restored to a safe and proper condition.

N. Do not leave trench open at end of working day.

3.13 MARKING TAPE INSTALLATION

A. Continuously install marking tape along centerline of all buried piping, install 24 inches below finished grade. Coordinate with piping installation Drawings.

3.14 ELECTRONIC LOCATING FACILITY INSTALLATION

A. Tracer Wire and Terminal Appurtenances:

1. Tracer Wire:

a. Install as shown or directed directly over the pipe centerline and on top of the pipe zone in all sewer trenches, including mainline sewers, service laterals and storm sewer inlet leads.

b. Connect mainline and service lateral tracer wires using either an approved direct-bury lug connector or direct-bury twist connector.

c. Extend tracer wire to locator stations in manholes, locator boxes, storm inlets, or other visually identifiable terminal appurtenances, allowing for access with electronic locating equipment, as shown or directed and according to the following requirements:

3.15 VISUAL IDENTIFICATION FACILITIES

A. Tracer Wire Locate Boxes: Install tracer wire locate boxes directly over service laterals at property line, service boundary, or other location as shown or directed by the Engineer.

3.16 FIELD QUALITY CONTROL

A. All testing and reporting shall be conducted and completed by an independent laboratory provided by the Contractor.

B. Perform laboratory material tests in accordance with ASTM D698 (AASHTO T99).

C. In-place compaction testing of pipeline backfill materials shall be performed at 2-foot elevation increments, one test per 200 lineal feet of pipeline trench as measured along pipe centerline.

1. The Engineer may reduce the frequency when satisfied with method of compaction.

2. The Engineer may direct testing at a higher frequency at no additional cost to COMPANY upon failure to obtain specified densities or if the Contractor changes compaction equipment or methods of compaction.

3. The Engineer shall determine all test locations.

D. Perform in place compaction tests in accordance with the following:

1. Density Tests: ASTM D6938

2. Moisture Tests: ASTM D3017

E. When tests indicate Work does not meet specified requirements, remove Work, replace, and retest at the sole expense of the Contractor.

3.17 SURFACE RESTORATION AND CLEANUP

A. Open Trenches: At the end of each workday, all open trenches shall be backfilled and all trenches within streets shall be temporarily paved or covered to the satisfaction of the Engineer and the local permitting agency.

1. Temporary paving shall be replaced with permanent street paving at the completion of construction within street rights-of-way, or sooner, if deemed necessary by the Engineer.

2. No gravel-filled trenches shall be left open within the street right-of-way at the end of the workday.

B. Topsoil:

1. Where trenches cross lawns, garden areas, pastures, cultivated fields, or other areas on which reasonable topsoil conditions exist, remove the topsoil to the specified depth and place the material in a stockpile.

2. Topsoil shall not be mixed with other excavated material.

3. After the trench has been backfilled, the topsoil shall be replaced.

C. Clean up and remove all excess materials, construction materials, debris from construction, etc. Replace or repair any fences, mailboxes, signs, landscaping, or other facilities removed or damaged during construction. Replace all lawns, topsoil, shrubbery, flowers, etc., damaged or

removed during construction. The Contractor shall be responsible for seeing that lawns, shrubs, etc. remain alive and leave premises in condition equal to original condition before construction.

3.18 SCHEDULE – NOT USED

END OF SECTION

SECTION 31 25 00 – EROSION AND SEDIMENT CONTROLS

PART 1 GENERAL

1.1 SCOPE

A. This section covers the requirements for temporary and permanent erosion and sedimentation control necessary to prevent migration of sediment and silt laden water to adjacent surface water bodies and drainage structures.

B. The Contractor shall provide all materials, labor, and equipment necessary to install adequate erosion and sedimentation controls.

1.2 QUALITY CONTROL

A. Erosion control provisions shall conform to regulatory requirements of the following agencies.

1. Federal Clean Water Act – Section 402 and title 33, Sect 1251 et seq.

2. Pinal County Stormwater Management Ordinance No. 050615-SMO.

1.3 SUBMITTALS – NOT USED

1.4 SCHEDULE

A. Required temporary erosion and sedimentation control Best Management Practices (BMPs) must be constructed and in operation prior to land clearing or other construction activities to ensure that sediment laden water does not leave the site.

B. Temporary sediment facilities shall be maintained in a satisfactory condition until such time that permanent ESC facilities are in place or sufficient vegetation has been established and potential for on-site erosion has passed.

C. The implementation, maintenance, replacement, and additions to erosion/sedimentation control systems shall be the responsibility of the Contractor.

PART 2 PRODUCTS

2.1 CHECK DAM SAND OR GRAVEL BAGS

A. Bags to be either burlap or woven “Geotextile” fabric filled with gravel or sand.

2.2 JUTE MATTING

A. Be of a uniform open plain weave of unbleached, single jute yarn treated with a fire-retardant chemical.

B. The yarn shall be of a loosely twisted construction and shall not vary in thickness by more than one-half of its normal diameter.

C. Furnished in rolled strips 48 inches wide by approximately 50 yards long.

D. Average weight of 0.92 pounds per square yard with an allowable tolerance of plus or minus 1 inch in width and 5 percent in weight.

2.3 FILTER FABRIC FENCE

A. Filter Fabric

1. Filter fabric for the erosion protection barriers shall be Mirafi 140, or equivalent.

B. Wire

1. Wire for the erosion protection barriers shall be 2 by 2 mesh, 12-gauge galvanized wire.

C. Support Posts

1. Support posts for the erosion protection barriers shall be minimum 2-inch by 2-inch, Douglas Fir No. 1, or better wood posts.

2.4 CLEAR PLASTIC COVERING

A. Clear plastic covering for protection of slopes and cuts shall meet the requirements of the ASTM D2103 for Polyethylene sheeting having a minimum thickness of 6 mil.

2.5 INLET PROTECTION

A. All new and existing stormwater inlets which collect stormwater runoff from a construction site shall be protected from sediment by the use of filters.

2.6 STABILIZED CONTRUCTION ENTRANCE

A. Wherever construction vehicles enter or leave a construction site, a Stabilized Construction Entrance is required.

PART 3 EXECUTION

3.1 EROSION CONTROL

A. Erosion control provisions shall meet or exceed the requirements of the local agency having jurisdiction.

B. When provisions are specified and shown on the drawings, they are the minimum requirements.

C. Contractor shall not permit sediment-laden waters to leave the site.

D. As construction progresses and seasonal conditions dictate, more siltation control facilities may be required. It shall be the responsibility of the Contractor to address new conditions that may be created and to provide additional facilities over and above minimum requirements as may be required.

E. Provide temporary erosion control measures to prevent erosion from piles of topsoil or fill material. Before completing the Contract, any areas of bare soil shall be permanently seeded.

F. Additional measures may be necessary depending on construction activity and weather. Contractor will be responsible for carrying out the erosion control provisions of the approved ESC Plan.

1. Keep streets and paved surfaces clean of mud and debris. Install gravel construction entrances as shown on the Plans and maintain them for the duration of the construction period.

3.2 SILTATION CONTROL

A. Siltation control is required. Check dams or silt fences may be placed in streams or ditches receiving stormwater from areas disturbed by construction.

3.3 FILTER FABRIC FENCES

A. Filter fabric fence shall consist of filter fabric fastened to wire fabric with staples or wire rings.

B. Wire shall be fastened to posts set at 6 foot-maximum centers.

C. Fabric shall be buried into ground a minimum of 4 inches to prevent silt from washing under fabric.

D. Fence shall be located to catch silt and prevent discharge to drainage courses.

3.4 EROSION CONTROL CHECK DAM

A. Sand or gravel filled bags shall be installed in drainage way to catch silt.

B. Spillway shall be lower than outer edge of dam. Leave a one sandbag gap in top row to provide spillway.

3.5 PLACING JUTE MATTING

A. Seed and fertilizer shall be placed prior to placing of matting.

B. Jute matting shall be unrolled parallel to the flow of water. Where more than one strip of jute matting is required to cover the given area, it shall overlap the adjacent mat a minimum of 4 inches. The ends of matting shall overlap at least 6 inches with the upgrade section on top.

C. The up-slope end of each strip of matting shall be staked and buried in a 6-inch-deep trench with the soil firmly tamped against the mat. Three stakes per width of matting (one stake at each overlap) shall be driven below the finish ground line prior to backfilling of the trench.

D. Engineer may require that any other edge exposed to more than normal flow of water or strong prevailing winds be staked and buried in a similar manner.

E. Check-slots shall be laced between the ends of strips by placing a tight fold of the matting at least 6 inches vertically into the soil. These shall be tamped and stapled the same as up-slope ends. Check-slots must be placed so that one check-slot or one end occurs within each 50 feet of slope.

F. Edges of matting shall be buried around the edges of catch basins and other structures as herein described. Matting must be spread evenly and smoothly and in contact with the soil at all points.

G. Matting shall be held in place by approved wire staples, pins, spikes, or wooden stakes driven vertically into the soil. Matting shall be fastened at intervals not more than 3 feet apart in three rows for each strip of matting, with one row along each edge and one row alternately spaced in the middle. All ends of the matting and check-slots shall be fastened at 6-inch intervals across their width. Length of fastening devices shall be sufficient to securely anchor matting against the soil and driven flush with the finished grade.

3.6 PLACING CLEAR PLASTIC COVERING

A. Clear plastic covering shall be installed on erodible embankment slopes.

B. The clear plastic covering shall be installed immediately after completion of the application of roadside seeding. It is the intent of this specification that clear plastic covering will be in place before the fall rainfall begins.

C. Maintain the cover tightly in place by using sandbags or ties on slopes with a minimum of 10-foot grid spacing in all directions. All seams shall be taped or weighted down full length. There shall be at least a 12-inch overlap of all seams.

D. Immediately repair all damaged areas.

3.7 EXISTING DRAINAGE FACILITIES

A. Should a storm sewer or culvert become blocked or have its capacity restricted due to siltation from Contractor's operations, the Contractor shall make arrangements with the jurisdictional agency for the cleaning of the facility at no additional expense to COMPANY.

B. Contractor shall install catch basin inserts in existing catch basins in the vicinity of, or adjacent to, clearing or construction activities to prevent sediment from entering the on-site stormwater conveyance system.

3.8 DRAINAGE DIVERSION

A. Contractor may divert up-gradient surface runoff water around the site as required. Contractor will be responsible for routing diverted surface water to its original flow path downstream of the site and providing energy dissipation and/or dispersion as needed to mimic pre-diverted flow characteristics, as required by the Engineer.

B. Drainage shall be restored to condition existing prior to construction unless otherwise shown on the drawings.

END OF SECTION

SECTION 31 37 00 - RIP RAP

PART 1 GENERAL

1.1 SCOPE

A. This Section consists of furnishing and placing an erosion-resistant cover material for protecting slopes and basins at locations shown or as directed.

B. Related Sections:

1. Section 03 60 00, Grouting
2. Section 31 22 13, Rough Grading

1.2 DEFINITIONS

A. Filter Blanket - A layer of graded granular material placed between the area prepared for it and the riprap.

B. Grouted Riprap - Loose riprap with all or part of the spaces filled with Portland cement mortar.

C. Keyed Riprap - Loose riprap placed on prepared slope, riprap geotextile, or filter blanket, as specified, and keyed in place by slapping the surface with a piece of armor plating.

D. Loose Riprap - Specified classes of graded rock placed on prepared slope, riprap geotextile, or filter blanket, as specified.

E. Riprap Backing - An option of using either riprap geotextile or a filter blanket placed between the area prepared for it and the riprap.

F. Riprap Basin - Energy dissipater consisting of loose riprap placed at pipe outlets as specified.

G. Riprap Geotextile - A geotextile placed between the area prepared for it and the riprap.

1.3 SUBMITTALS

A. Section 01 33 00 - Submittal Procedures: Requirements for submittals.

B. Materials Source: Submit name of imported materials suppliers.

C. Manufacturer's Certificate: Certify Products meet or exceed specified requirements.

D. Results of aggregate sieve analysis and standard proctor tests for all granular material.

PART 2 MATERIALS

2.1 RIPRAP GEOTEXTILE

A. Furnish riprap geotextile as shown in the Drawings.

2.2 RIPRAP REQUIREMENTS

A. General - Furnish rock for loose riprap meeting the following requirements:

1. Waste or sacked concrete shall not be permitted for use as riprap.
2. Meet the test requirements of provided herein.
3. The maximum aggregate size shall be 150% of the indicated D_{50} size, and the minimum aggregate size shall be 50% of the indicated D_{50} size.
4. Be angular in shape. Thickness of a single rock shall not be less than 1/3 its length. Rounded rock will not be accepted unless authorized by the Engineer.
5. The loss by abrasion in the Los Angeles Abrasion Machine, determined as prescribed in ASTM C535, shall not exceed 40 percent (by weight) after 1,000 revolutions.
6. Meet the gradation requirements for the class specified.
7. Be free from overburden, spoil, shale, and organic material. Non-durable rock, shale, or rock with shale seams is not acceptable.

B. Test Requirements - Furnish the rock meeting the following test requirements:

Material Test	Requirement
Apparent Specific Gravity (AASHTO T 85)	2.50 Min.
% Absorption (AASHTO T 85)	6.0 Max.
Degradation (ODOT TM 208A)	
Passing No. 20 Sieve	35.0% Max.
Sediment Height	8.0" Max.
Soundness (AASHTO T 104)	
Average Loss of 2 1/2" - 1 1/2" and	
1 1/2" - 3/4" fraction after 5	16.0% Max.
alternations	

C. Gradation Requirements - Grade loose riprap by class and weight of rock according to the following:

Class 50	Class 100	Class 200	Class 700	Class 2000	
Weight of Rock (pounds)					Percent (by Weight)
50 - 30	100 - 60	200 -	700 -	2000 -	20.0
30 - 15	60 - 25	140	500	1400	30.0
15 - 2	25 - 2	140 - 80	500 -	1400 -	40.0
2 - 0	2 - 0	80 - 8	200	700	10.0 - 0
		8 - 0	200 - 20	700 - 40	
			20 - 0	40 - 0	

Uniformly grade each load of riprap from the smallest to the largest weight specified. Control of gradation will be by visual inspection.

1. Control Sample - If directed, provide, at a satisfactory location near the Project Site, a rock sample of at least 5 tons meeting the gradation for the class specified. This sample will be used as a frequent visual reference for judging the gradation of the riprap supplied.

2. Sampling and Testing Assistance - Any difference of opinion between the Engineer and the Contractor shall be resolved by dumping and checking the gradation of two random truckloads of rock. Mechanical equipment, a sorting site, and labor needed to assist in checking gradation shall be provided by the Contractor at no additional cost to COMPANY.

D. Grouted Riprap

1. Furnish rock for grouted rip rap meeting the requirements of stated herein for class and size specified.

2. Furnish non-shrink Portland cement grout meeting the requirements of Section 03 60 00, Grouting.

E. Filter Blanket

1. Filter blankets shall be nonwoven or woven fabric consisting only of long chain polymeric filaments such as polypropylene or polyester formed or woven into a stable network such that the filaments retain their relative position to each other.

2. Furnish filter blanket material meeting the following requirements according to riprap class:

Riprap Class	Filter Blanket
Class 2000	16-inch layer of Class 50 riprap conforming to the requirements of this section
Class 700	9-inch layer of 6-inch - 0 stone embankment meeting the test requirements of this section
Class 200	6-inch layer of 4-inch - 0 stone embankment meeting the test requirements of this section
Class 100	No filter blanket required
Class 50	No filter blanket required

3. The filter fabric shall conform to the following physical properties:

Property	Class A	Class B	Test Method
Grab Tensile Strength (lbs)	180 min	80 min	ASTM D4632
Seam Strength (lbs)	160 min	70 min	ASTM D4632
Puncture Strength (lbs)	80 min	25 min	ASTM D4833
Trapezoidal Tear (lbs)	50 min	25 min	ASTM D4533
Apparent Opening Size	>50	>50	ASTM D4751

Ultraviolet Stability (%)	50 min	50 min	ASTM D4355

PART 3 EXECUTION

3.1 PREPARATION

A. Remove brush, trees, stumps, and other organic material from slopes to be protected by riprap and dress to a smooth surface.

B. Remove all unsuitable material to the depth shown or directed and replace with approved material.

C. Provide riprap protection as early as the structure foundation construction permits. Prepare the surfaces to be protected as shown.

D. Maintain the trench slopes, riprap geotextile, or filter blanket until the riprap is placed.

3.2 RIPRAP GEOTEXTILE

A. Install riprap geotextile as shown in the Drawings or as directed by the Engineer.

3.3 FILTER BLANKET CONSTRUCTION

A. If required, place the filter blanket on the prepared area to the full specified thickness in one operation, using methods which will not cause segregation.

B. The surface of the finished layer shall be reasonably even.

3.4 RIPRAP BACKING

A. When indicated on the Drawings, the Contractor shall have the option of placing either riprap geotextile or a filter blanket behind the riprap.

B. Install the backing per these specifications or as shown in the Drawings.

3.5 RIPRAP

A. General - Unless otherwise directed, place the riprap protection as the embankment is constructed. Its placement shall lag behind embankment construction only as necessary to allow proper embankment construction and prevent mixture of embankment and riprap material.

B. Loose Riprap - Place riprap on the prepared area:

1. With a clamshell, orange-peel bucket, skip, or similar approved device which will contain the riprap material to its final destination. Do not open the bucket until it has been lowered to the slope on which the material is being placed.

2. To its full course thickness in one operation.

3. According to the compaction requirements of Section 31 23 23, Fill if riprap is placed on geotextile

4. By methods that do not cause segregation of riprap or displace the underlying material.

5. To produce a compact riprap protection in which all sizes of material are placed in their proper proportion.

6. With some hand placing, or rearranging of individual stones by mechanical equipment, or some other approved means to provide a smooth finished surface.

7. Where filter material and/or riprap are placed under water, increase their thicknesses as shown or as directed.

C. Keyed Riprap - After placing loose riprap material, key the riprap into place by slapping the surface with a piece of armor plating (approximately 4 feet by 5 feet in size with a weight of approximately 5,000 pounds) or other approved means which will produce a nearly smooth surface.

D. Grouted Riprap - Place loose riprap material. If the depth specified for grouting is more than 12 inches, place the riprap in lifts of 12 inches or less and grout each lift before placing the next lift. Construct and grout the succeeding lifts before the grout in the previous lift has hardened.

1. Thoroughly moisten the stones and sluice any excess fines to the underside of the riprap before grouting. Deliver the grout to the place of final deposit by any means that will ensure uniformity and prevent segregation of the grout. Spade or rod the grout into the spaces to completely fill the voids in the riprap. Control pressure grouting and do not unseat the stones. Penetration of the grout shall be to the depth shown on the plans. If a rough surface is specified, brush the stone until 25 percent to 50 percent of the depth of surface stone is exposed. For a smooth surface, grout the crevices to within 5/8-inch of the surface.

2. Provide weep holes through the riprap as shown or as directed.

3. Place and cure grout according to 03 60 00, Grouting, except as provided above.

E. Riprap Basins - Excavate, backfill, and construct riprap basins, without a riprap geotextile or filter blanket, at pipe outlets with Class 50 riprap as shown or as directed.

3.6 MAINTENANCE

A. Maintain the riprap protection until accepted. Replace any material displaced by any cause at no additional cost to COMPANY.

END OF SECTION

SECTION 31 05 13 - SOILS FOR EARTHWORK

PART 1 GENERAL

1.1 SUMMARY

A. This Section includes range of soil and subsoil materials intended to be referenced by other sections, generally for fill and grading purposes. Materials are indicated by "Type" to assist in referencing from other sections and on Drawing notes.

B. Section includes:

1. Subsoil materials
2. Topsoil materials

C. Related Sections

1. Section 31 05 16, Aggregates for Earthwork
2. Section 31 22 13, Rough Grading
3. Section 31 23 17, Trenching
4. Section 31 37 00, Riprap

1.2 REFERENCES

A. ASTM International (ASTM):

1. ASTM D698 - Standard Test Method for Laboratory Compaction Characteristics of Soil Using Standard Effort (12,400 ft-lbf/ft3 (600 kN-m/m3))
2. ASTM D2487 - Standard Classification of Soils for Engineering Purposes (Unified Soil Classification System)
3. ASTM D4318 – Standard Test Methods for Liquid Limit, Plastic Limit, and Plasticity of Soils
4. ASTM D4829 – Standard Test Method for Expansion Index of Soils

1.3 SUBMITTALS

A. Section 01 33 00, Submittal Procedures: Requirements for submittals.

B. Materials Source: Submit name of imported materials source.

C. Manufacturer's Certificate: Certify Products meet or exceed specified requirements.

1.4 QUALITY ASSURANCE

A. Furnish materials of each type from same source throughout the Work.

B. Soil Testing:

1. Soil sampling and testing to be completed by an independent laboratory approved by the Engineer.

2. Frequency of testing shall be determined by the Engineer.

3. All soil testing shall be paid for by the Contractor.

C. Compaction Tests:

1. Maximum density at optimum moisture content determined by ASTM D698 (AASHTO T99).

2. In-place density in accordance with Nuclear Testing Method, ASTM D6938 (AASHTO T310).

D. Soil Classification: All imported materials shall be classified in accordance with ASTM D2487.

PART 2 PRODUCTS

2.1 SUBSOIL MATERIALS

A. Subsoil Type S1, Select Native Material:

1. Select earth obtained from on-site excavations approved for use by Engineer.

2. Graded.

3. Free of peat, humus, vegetative matter, organic matter, refuse, and construction debris. Clay clumps and rocks shall not be larger than 4 inches in diameter.

4. Processed as required to be placed in thickness as prescribed and at the optimum moisture content to obtain level of compaction required by these specifications.

5. Low Plasticity Index (PI) value of 15 or less, as evaluated by ASTM D4318.

6. Low Expansion Index value of 50 or less, as evaluated by ASTM D4829.

7. Fill materials in contact with ferrous metals: Low corrosion potential characterized by a minimum resistivity of 2,000 ohm-cm and a chloride content less than 25 parts per million (ppm).

8. Fill materials in contact with concrete: Soluble sulfate content of less than 0.1 percent.

B. Subsoil Type S2, Imported Fill Material:

1. Imported earth approved for use by Engineer.

2. Meeting the requirements of Subsoil Type S1.

2.2 TOPSOIL MATERIALS

A. Topsoil Type TS1, Select Native Topsoil Material:

1. Top 6 – 12 inches of existing soil containing organic matter.

2. ENGINEER decision shall be final as to determination of what material is quality topsoil.

3. Graded.

4. Free of roots, rocks larger than 1/2-inch subsoil, debris, large weeds, and foreign matter.

   a. Screening: Single screened.

B. Topsoil Type TS2, Imported Topsoil Material:

1. Imported borrow.

2. Friable loam.

3. Reasonably free of roots, rocks larger than 1/2-inch, subsoil, debris, large weeds, and foreign matter.

   a. Screening: Single screened.

4. Acidity range (pH) of 5.5 to 7.5.

2.3 SPOILS

A. All excess material not suitable or not required for backfill and grading shall be hauled off site and disposed of at a location provided by the Contractor and approved by the Engineer.

B. Make arrangements for disposal of the material at no additional cost to COMPANY.

C. Landfill permit to be obtained by the Contractor and provided to Engineer prior to commencement of disposal.

2.4 SOURCE QUALITY CONTROL

A. Testing and Analysis of Subsoil Material: Perform in accordance with ASTM D698 (AASHTO T99) .

B. When tests indicate materials do not meet specified requirements, change material, or vary compaction methods and retest. Additional testing shall be completed and paid for by the Contractor with no reimbursement by COMPANY.

C. Furnish materials of each type from same source throughout the Work.

PART 3 EXECUTION

3.1 EXCAVATION

A. Excavate material of every nature and description to the lines and grades as indicated on the Drawings and/or as required for construction of facilities.

B. Site within clearing limits shall be stripped of topsoil as required to obtain additional topsoil necessary to complete Work indicated in the Drawings or as specified.

C. When practical, do not excavate wet topsoil.

D. Stockpile excavated material meeting requirements for subsoil materials and topsoil materials.

E. Remove excess excavated subsoil and topsoil not intended for reuse from Site.

F. Remove excavated materials not meeting requirements for subsoil materials and topsoil materials from Site.

3.2 STOCKPILING

A. Stockpile soils at locations as approved by Engineer for redistribution as specified.

1. Site may not have sufficient area to stockpile excavated material that will be required for fill later in the Project. If additional stockpile area is required to complete the Project on schedule, arrange off-site stockpile areas.

2. No additional payments will be made for stockpiling excavated materials off-site.

B. Stockpile in sufficient quantities to meet Project schedule and requirements.

C. Prepare stockpile site by clearing and smoothing.

D. Construct stockpiles in neat, regular form occupying as small an areas as possible.

E. Begin by spreading material over entire stockpile base.

F. Build upward in successive layers not exceeding 3 feet in depth.

G. Stockpile topsoil 8 feet high maximum.

H. Do not end dump, shove, or conveyor stack over the sides of the pile.

I. Separate differing materials with dividers or stockpile apart to prevent mixing.

J. Prevent intermixing of soil types or contamination.

K. Direct surface water away from stockpile site to prevent erosion or deterioration of materials.

1. Grade surface of stockpiles to prevent ponding of water.

2. Cover stockpiles to minimize the infiltration of water.

L. Stockpile unsuitable and/or hazardous materials on impervious material and cover to prevent erosion and leaching, until disposed of.

3.3 STOCKPILE CLEANUP

A. Remove stockpile, leave area in clean and neat condition. Grade site surface to prevent free standing surface water.

B. When borrow area is indicated, leave area in clean and neat condition. Grade site surface to prevent free standing surface water.

END OF SECTION

Page left intentionally blank

SECTION 31 05 16 - AGGREGATES FOR EARTHWORK

PART 1 GENERAL

1.1 SUMMARY

A. This Section includes a range of coarse and fine aggregate materials intended to be referenced by other Sections, generally for fill and grading purposes. Materials are indicated by "Type" to assist in referencing from other Sections and in Drawing notes.

B. Section Includes:

1. Coarse aggregate materials
2. Fine aggregate materials

C. Related Sections

1. Section 31 05 13, Soils for Earthwork
2. Section 31 22 13, Rough Grading
3. Section 31 23 17, Trenching
4. Section 31 37 00, Riprap

1.2 REFERENCES

A. ASTM International (ASTM):

1. ASTM C136 - Standard Test Method for Sieve Analysis of Fine and Coarse Aggregates
2. ASTM D698 - Standard Test Method for Laboratory Compaction Characteristics of Soil Using Standard Effort (12,400 ft-lbf/ft3 (600 kN-m/m3))
3. ASTM D2487 - Standard Classification of Soils for Engineering Purposes (Unified Soil Classification System)
4. ASTM D4318 - Standard Test Method for Liquid Limit, Plastic Limit, and Plasticity Index of Soils
5. ASTM D6938 - Standard Test Method for In-Place Density and Water Content of Soil and Soil-Aggregate by Nuclear Methods (Shallow Depth)

1.3 SUBMITTALS

A. Section 01 33 00, Submittal Procedures: Requirements for submittals.

B. Materials Source: Submit name of imported materials suppliers.

C. Manufacturer's Certificate: Certify Products meet or exceed specified requirements.

D. Results of aggregate sieve analysis and standard proctor tests for all granular material.

1.4 QUALITY ASSURANCE

A. Furnish each aggregate material from single source throughout the Work.

B. Aggregate Testing:

1. Aggregate sampling and testing to be completed by an independent laboratory approved by the Engineer.

2. The frequency of testing shall be determined by the Engineer.

3. All aggregate testing shall be paid for by the Contractor.

C. Compaction Tests:

1. Maximum density at optimum moisture content determined by ASTM D698 (AASHTO T99).

2. In-place density in accordance with Nuclear Testing Method, ASTM D6938.

D. Aggregate Classification: All imported materials shall be classified in accordance with ASTM D2487.

PART 2 PRODUCTS

2.1 COARSE AGGREGATE MATERIALS

A. Coarse Aggregate Type A1, Dense-Graded Aggregate: Crushed rock with ¾-inch-0, 1-inch-0, 1-1/2-inch-0, 2-inch-0 and 2-1/2-inch-0 gradation as shown on the Drawings and meeting the requirements provided below.

1. Grading - Dense-graded base aggregate shall be crushed rock, including sand. Uniformly grade the aggregates from coarse to fine.

2. Sieve analysis shall be determined according to AASHTO T27.

3. The aggregates shall conform to the grading requirements in Table 31 05 16-A below.

Table 31 05 16-A
Grading Requirements for Dense-Graded Aggregate

Sieve Size	2-1/2" - 0	2" - 0	1-1/2" - 0	1" - 0	3/4" - 0
3 inch	100				
2-1/2 inch	95 - 100	100			
2 inch	-	95 - 100	100		
1-1/2 inch	-	-	95 - 100	100	
1-1/4 inch	55 - 75	-	-	-	
1 inch	-	55 - 75	-	90 - 100	100
3/4 inch	-	-	55 - 75	-	90 - 100
1/2 inch	-	-	-	55 - 75	-

Sieve Size	2-1/2" - 0	2" - 0	1-1/2" - 0	1" - 0	3/4" - 0
3/8 inch	-	-	-	-	55 - 75
1/4 inch	30 - 45	30 - 45	35 - 50	40 - 55	40 - 60
No. 4*	-	-	-	-	-
No. 10	[1]	[1]	[1]	[1]	[1]

[1] Of the fraction passing the 1/4-inch sieve, 40 percent to 60 percent shall pass the No. 10 sieve.
* Report percent passing sieve when no grading requirements are listed.

B. Coarse Aggregate Type A2, Granular Backfill Material: Crushed or uncrushed rock or gravel as shown on the Drawings.

1. Material shall be clean, free draining, hard, sound, durable, uniform in quality, and free of any detrimental quantity of soft, friable, thin elongated, or laminated pieces, disintegrated material, organic matter, oil, alkali, or other deleterious substance.

2. Maximum allowable Plasticity Index value of 5, as evaluated by AASHTO T-89 Method A.

3. Fractured face, one face: Minimum required value of 50% by weight of the material retained on a No. 4 sieve, as evaluated by ARIZ 212.

4. Resistance to degradation and abrasion by the Los Angeles abrasion machine, as evaluated by AASHTO T-96.

   a. Maximum allowable value of 10% loss by weight at 100 revolutions.

   b. Maximum allowable value of 40% loss by weight at 500 revolutions.

5. Sieve analysis shall be according to AASHTO T27.

6. Grading shall meet the requirements provided in Table 31 05 16-B below.

Table 31 05 16-B
Grading Requirements for Granular Backfill Material

Sieve Size	Percent Passing (By Weight)
3 inch	-
1-1/2 inch	100
1 inch	90 - 100
No. 4	38 - 65
No. 8	25 - 60
No. 30	10 - 40
No. 200	3 - 12

2.2 SAND

A. Sand: Sand material shall consist of granular material, naturally produced, or produced from crushed gravel, or dredge sand that is reasonably free of organic material, mica, clay, fly ash,

and other deleterious material. Particles shall pass a No. 4 sieve, but be retained on a No. 200 sieve.

2.3 SOURCE QUALITY CONTROL

A. Coarse Aggregate Material - Testing and Analysis: Perform in accordance with ASTM C136 and ASTM D698 (AASHTO T99).

B. Sand - Testing and Analysis: Perform in accordance with ASTM C136 and ASTM D698 (AASHTO T99).

C. When tests indicate materials do not meet specified requirements, change material and retest. Additional testing shall be completed and paid for by the Contractor with no reimbursement by COMPANY.

PART 3 EXECUTION

3.1 STOCKPILING

A. Stockpile materials imported to site at locations as approved by Engineer for redistribution as specified.

B. Separate different aggregate materials with dividers or stockpile individually to prevent mixing.

C. Prevent intermixing of aggregate types or contamination.

D. Direct surface water away from stockpile site to prevent erosion or deterioration of materials.

1. Grade surface of stockpiles to prevent ponding of water.

2. Cover stockpiles to minimize the infiltration of water.

3.2 STOCKPILE CLEANUP

A. Remove stockpile, leave area in clean and neat condition. Grade site surface to prevent free standing surface water.

B. When borrow area is indicated, leave area in clean and neat condition. Grade site surface to prevent free standing surface water.

END OF SECTION

SECTION 33 13 00 - TESTING AND DISINFECTION OF WATER UTILITY PIPING

PART 1 GENERAL

1.1 SUMMARY

A. Work in this Section includes hydrostatic pressure testing, disinfection, and purity testing of potable water systems piping, fittings, valves, and domestic water services.

B. Section Includes:

1. Pressure testing and disinfection of potable water distribution and transmission piping systems and appurtenances.

2. Testing and reporting of results.

1.2 REFERENCE STANDARDS

A. Arizona Department of Environmental Quality (ADEQ)

1. Engineering Bulletin No. 8 - Disinfection of Water Systems

B. American Water Works Association (AWWA):

1. AWWA B300 – Hypochlorites.
2. AWWA B301 - Liquid Chlorine.
3. AWWA C600 - Installation of Ductile-Iron Mains and Their Appurtenances.
4. AWWA C605 - Underground Installation of Polyvinyl Chloride (PVC) and Molecularly Oriented Polyvinyl Chloride (PVCO) Pressure Pipe and Fittings.
5. AWWA C651 - Disinfecting Water Mains.
6. AWWA C655 - Field Dechlorination.

1.3 SUBMITTALS

A. In accordance with Section 01 33 00, Submittal Procedures.

B. Product Data

1. Submit procedures, proposed chemicals, and treatment levels.

C. Manufacturer's Certificate

1. Certify that products meet or exceed specified requirements.

D. Pipeline Testing and Disinfection Plan

1. To be submitted for review and approval by the Engineer a minimum of 1 month before testing is to start.

2. As a minimum, include the following information:

a. Testing schedule.

b. Hydrostatic Testing Plan:

1) Narrative of the proposed process.
2) Proposed equipment to be used.
3) Disposal location for excess water used to fill mains.

c. Disinfection Plan:

1) Narrative of the proposed process.

2) Proposed chemicals and equipment (including list of pumps and meters) to be used.

3) Calculations for the amount of chlorine required to achieve required chlorine residual levels.

4) Proposed method of mixing, injecting, and distributing chlorine solution throughout all portions of the new water system facilities.

5) Proposed plan for testing chlorine levels throughout the length of pipeline.

d. Proposed testing locations.

e. Proposed plan for water conveyance, including flow rates.

f. Proposed plan for water control.

g. Proposed plan for water disposal, including flow rates. Include proposed plan for dechlorination of disinfection water, including discharge points.

h. Proposed measures to be incorporated in the Project to minimize erosion while discharging water from the pipeline.

1.4 CLOSEOUT SUBMITTALS

A. Disinfection Report:

1. Type and form of disinfectant used.

2. Date and time of disinfectant injection start and time of completion.

3. Test locations.

4. Name of person collecting samples.

5. Initial and 24-hour disinfectant residuals in treated water in parts-per million (ppm) for each outlet tested.

6. Date and time of flushing start and completion.

7. Disinfectant residual after flushing in ppm for each outlet tested.

1.5 QUALITY ASSURANCE

A. Perform Work in accordance with ADEQ Engineering Bulletin No. 8 or AWWA C651.

PART 2 PRODUCTS

2.1 EQUIPMENT

A. Furnish test equipment, chemicals for chlorination, temporary valves, bulkheads, or other water control equipment and materials and submit for Engineer's review and approval.

1. Use materials that are not injurious to the construction or its future functions.

B. Temporary thrust restraint and equipment and facilities required for hydrostatic testing will be considered incidental.

A. As a minimum, furnish the following equipment and materials for the testing:

Amount	Description
2	Graduated containers, as approved by the Engineer.
1	Hydraulic pump, as approved by the Engineer, with hoses, valves, and fittings as required for the testing and disinfection of the facilities.
1	High range chlorine test kit, as approved by Engineer, with digital readout. The range of detection is required to be between 5 and 200 ppm with an accuracy of 3 percent.
2	Pressure gauges with pressure range at least 120 percent greater than the required maximum test pressure with graduations in 2 pounds per square inch (psi) increments. Calibrate gauges within 90 days of pressure testing.

2.2 DISINFECTION CHEMICALS

A. Chemicals:

1. Hypochlorite: Comply with AWWA B300.
2. Liquid chlorine: Comply with AWWA B301.

2.3 DECHLORINATION CHEMICALS

A. Chemicals:

1. Comply with AWWA C655.

PART 3 EXECUTION

3.1 HYDROSTATIC TESTING OF WATER PIPING

A. Make necessary provisions for conveying water to the points of use and for the disposal of test water.

B. Furnish and operate pumps, gauges, plugs, saddles, corporation stops, miscellaneous hose and piping, and measuring equipment necessary for performing the test.

1. Testing materials and equipment required to perform testing are incidental and included in the cost of the pipe.

C. Hydrostatically test sections of pipe only when backfill has been placed, compacted, and passed required density testing and field-placed concrete or mortar has attained full strength.

1. Early strength concrete may be used when the full-strength requirements conflict with schedule requirements.

a. Provide substitutions and installations for Engineer's approval.

Note to Specifier

Include the maximum linear footage allowed for testing at one time. For projects with longer segments of pipes, it is recommended a maximum of 1,000 LF of pipe is tested at one time. Include the last sentence in the paragraph below if the Project requires a limit to the Contractor's pipe installation before confirmation of proper disinfection is completed.

D. Limit the testing a section of pipe to 1,000 feet.

1. The Engineer may require the first section of pipe, not less than 1,000 feet in length, be installed and tested to qualify the crew and the materials. [Do not lay additional pipe until the first section has been tested successfully.]

E. Provide 72-hour notification to the Engineer and COMPANY prior to conducting hydrostatic testing.

1. Provide coordination and scheduling required for COMPANY and Engineer to witness and provide necessary labor for operating COMPANY's existing system during hydrostatic testing and disinfecting procedures.

2. Do not operate any part of the existing water systems.

F. Pipe Filling:

1. Fill pipes slowly from the lowest elevation to the highest point along the section being tested with potable water.

2. Take required precautions to prevent entrapment of air in the pipes.

3. Expel air from high points by installing corporation cocks or air release valves at high point of the piping system. Close air vents and corporation cocks after air is expelled.

4. Allow for natural absorption of water by the lining of the pipe to occur.

5. Apply specified test pressure by pumping.

6. Use a clean container for holding water for pumping up pressure on the main being tested. Sterilize makeup water by adding chlorine to a concentration of 50 milligrams per liter (mg/L).

G. Testing of Mains:

1. Ductile Iron: In accordance with AWWA C600.

2. Polyvinyl chloride (PVC): In accordance with AWWA C605.General:

Note to Specifier

If the Project has specific minimum pressure testing values, provide those values below or summarize each pipeline pressure requirements in the pipe schedule.

a. Conduct tests under a hydrostatic test pressure not less than 1.25 times the stated anticipated maximum sustained working pressure of the pipeline measured at the highest elevation along the test section and not less than 1.5 times the stated working pressure at the lowest elevation of the test section, minimum **[150] [__]** psi **[as noted in Section 40 05 13, Process Piping Schedule]**.

b. The test pressure must not exceed the rated working pressure for any joint, thrust restraint, valve, fitting, or other connected appurtenance of the test section.

c. Apply the specified test pressure by pumping.

d. Valve off pump. once the test pressure has been attained.

e. The test will be conducted for a 2-hour period with the allowable leakage not to exceed the value as calculated per the Allowable Leakage formula below.

f. No appreciable or abrupt loss in pressure is unacceptable during the test period.

3. Allowable Leakage:

a. Flanged Joints: Pipe, fittings, and valves with flanged joints are required to be completely watertight. No leakage allowed.

b. Mechanical or Push-on Joints: Pipe, fittings, and valves with rubber gasketed joints must have a measured loss not to exceed the rate given in the following Allowable Leakage formula:

$$AL = \frac{LD(P)^{1/2}}{148{,}000}$$

In the above formula:

AL = Allowable leakage, in gallons per hour
L = Length of pipe tested, in feet
D = Nominal diameter of pipe, in inches
P = Average test pressure during the leakage test, in pounds per square inch (psi).

4. Maintaining Pressure:

a. At all times during the test period, operate the pump to maintain a pressure in the pipe within 5 psi of the specified test pressure.

b. At the end of test period, operate the pump until the specified test pressure is again obtained.

1) Provide a pump suction with a clean, graduated barrel so that the amount of water required to restore the test pressure may be accurately measured.

2) Sterilize this makeup water by adding chlorine to a concentration of 25 mg/L.

c. The Engineer will determine the quantity of water required to maintain and restore the required pressure at the end of the test period.

d. Each hour's loss stands on its own and will not be averaged.

5. Defects, Leakage, Failure:

a. If the test reveals any defects, the test pressure cannot be maintained within 5 psi during the duration of the test, leakage more than allowed, or other failure, furnish labor, equipment, and materials required to locate and make necessary repairs.

b. Correct any visible leakage regardless of the allowable leakage specified above.

c. Repair leaks in a manner acceptable to the Engineer.

d. Repeat the testing of the line until a test satisfactory to the Engineer has been achieved.

e. All costs for locating, repairing, and retesting shall be borne by the Contractor.

3.2 DISINFECTION OF WATER PIPING

A. Disinfect in accordance with ADEQ Engineering Bulletin No. 8 or the latest version of AWWA C651 following Engineer's acceptance of hydrostatic testing.

B. Chlorination by means of tablets or calcium hypochlorite powders placed in each length of pipe during installation is specifically prohibited.

C. Flush foreign matter from the pipeline, branches, and services.

1. Provide at no additional cost to COMPANY, hoses, temporary pipes, ditches, etc., as required to dispose of flushing water without damage to adjacent properties.

2. Flushing velocities are required to be at least 2.5 feet per second (fps).

3. For large diameter pipes where it is impractical or impossible to flush the pipe at 2.5 fps velocity, clean the pipe in place from the inside by brushing and sweeping, then flush the line at a lower velocity.

D. Chlorine Application:

1. Fill the test section of main from the lowest elevation and maintain a steady flow rate while injecting the water main with chlorinated water.

2. Flow a blow-off, standpipe or hydrant at the water main's high point(s) to allow air to escape and ensure interior pipe surfaces are wetted.

E. Chlorine Residual:

1. Measure chlorine residual with a high-range chlorine test kit at a point near to the injection point while filling the main.

2. Adjust the dose rate as necessary to maintain the target dose rate.

F. Disinfect potable water piping with a solution containing a minimum 25 ppm and a maximum 50 ppm chlorine.

1. Once the main is completely filled with super-chlorinated water, measure the chlorine residual a minimum of once every 200 feet of main and once for each main branch, 2-inch service, or as directed by the Engineer.

2. The chlorine solution is required to remain in the piping system for a period of 24 hours, after which time the sterilizing mixture is required to have a strength of at least 10 ppm of chlorine.

3. If check samples fail to produce acceptable results, repeat the disinfection procedure repeated at the expense of the Contractor until satisfactory results are obtained.

G. Flush piping, branches, and services with municipal potable water until the chlorine residual is below 1.5 ppm and approximately the same as the source water.

1. There is no minimum flushing velocity for this step.

H. Perform disposal of any water containing chlorine in accordance with the latest edition of AWWA C651 and C655, and all state or local requirements.

1. Disposal may be made into existing sanitary sewer systems providing approvals are obtained from the respective system owners.

2. Any chlorinated water discharged to open stream channels must be dechlorinated prior to discharge to levels acceptable by the applicable Laws and Regulations.

3.3 DISINFECTION AND TESTING OF WATER MAIN END CONNECTIONS AND TIE-INS

A. Disinfect potable water piping and appurtenances at end connections and tie-ins to the existing system which are required to remain in service due to restrictions in allowable shutdown time as described below.

B. Swab or spray the interior of all new pipe, fittings, valves, and appurtenances with a 1 percent to 5 percent calcium hypochlorite solution, prior to connecting new potable water piping and appurtenances with existing piping and appurtenances.

C. In accordance with AWWA C651, swabbing or spraying of connection piping is allowed only if the total length of piping is equal to or less than one pipe length. One pipe length equals 18 feet. All runs of new piping over 18 feet in total length will require hydrostatic pressure testing, flushing and disinfection as detailed elsewhere in this Section.

D. Following the disinfection procedures described above, connect the new piping and appurtenances to the existing water system.

1. During the system startup, the Engineer and Contractor provides visually inspect all new fittings, piping, valves, and appurtenances for evidence of leakage.

2. Promptly repair any leakage observed during this period at the Contractor's expense, as required by the Engineer.

3.4 FIELD QUALITY CONTROL

A. Bacteriological Sampling and Testing:

1. The Contractor will collect samples after the line is flushed in accordance with the latest edition of AWWA C651.

a. The locations for sample collection are at the sole discretion of COMPANY and Engineer.

b. The chlorine residual must be below 1.5 ppm or restored to the level maintained in the COMPANY's distribution system, when the sample is taken.

2. Bacterial Testing: After completing the chlorination procedure, test the main according to the following:

a. Bacterial Sampling

1) Option A:

a) Take an initial set of samples using sampling site procedures outlined herein.

b) Resample after a minimum of 24 hours' time has elapsed using sampling site procedures outlined herein.

c) Both sets of successive samples must pass for the main to be approved for service.

2) Option B:

a) Allow main to sit for a minimum of 24 hours without any water use.

b) Using sampling site procedures outlined herein, collect two sets of samples a minimum of 15 minutes apart while the sampling taps are left running.

c) Both sets of samples must pass for the main to be approved for service.

3) Allow 24 hours for the test results for each sample set.

b. Sampling Locations

1) Contractor will take one bacteriological sample from the end of the main and on each branch.

2) For long runs of main, at least one sample will be taken for every 1,000 feet of new main and as directed.

c. Sample Testing

1) Contractor will test the sample set for coliform bacteria and publish the test results within 24 hours.

d. Evaluating the Test Results

1) Test Results for Coliform.

a) Pass: Sample tests negative for coliform bacteria.

b) Fail: Sample tests positive for coliform bacteria.

2) If one or more of the sample set tests positive for coliforms, repeat chlorination and sampling processes specified herein after correcting the cause of the failure and as directed by the Engineer.

3) When two consecutive sample sets test negative for coliform bacteria, the bacterial testing is complete.

e. Completion of Bacterial Testing

1) Upon completion of bacterial testing, the Contractor is required to notify the Engineer and COMPANY in writing that the testing is complete and the main is ready for tie-in.

f. Multiple Positive Test Results

1) If sample sets continue to test positive for coliforms, the Engineer will determine how to proceed, up to and including repeating the chlorination procedure or rejecting the pipe.

3. Results of the bacteriological testing are required be satisfactory to applicable Laws and Regulations. If testing results are not satisfactory to applicable Laws and Regulations, disinfection and testing shall be repeated at the expense of the Contractor until satisfactory.

B. Optional Sampling and Testing

1. If a pipeline is not promptly returned to service, the situation will be evaluated by COMPANY to determine if the water quality may have been impacted and if additional testing as specified herein is warranted.

END OF SECTION

SECTION 40 05 78.19 – COMBINATION AIR VALVES FOR WATER SERVICE

PART 1 GENERAL

1.1 SUMMARY

A. Section Includes: Combination air valves for water treatment facilities.

1.2 REFERENCE STANDARDS

A. American Water Works Association:

1. AWWA C512 - Air Release, Air/Vacuum, and Combination Air Valves for Waterworks Service.

B. ASME International:

1. ASME B16.1 - Gray Iron Pipe Flanges and Flanged Fittings: Classes 25, 125, and 250.

C. ASTM International:

1. ASTM A126 - Standard Specification for Gray Iron Castings for Valves, Flanges, and Pipe Fittings.

2. ASTM A536 - Standard Specification for Ductile Iron Castings.

D. International Organization for Standardization:

1. ISO 9001 - Quality Management Systems.

E. NSF International:

1. NSF 61 - Drinking Water System Components - Health Effects.

2. NSF 372 - Drinking Water System Components - Lead Content.

1.3 COORDINATION

A. Section 01 30 00 - Administrative Requirements: Requirements for coordination.

B. Coordinate Work of this Section with installation of process piping.

1.4 PREINSTALLATION MEETINGS

A. Section 01 30 00 - Administrative Requirements: Requirements for preinstallation meeting.

B. Convene minimum one week prior to commencing Work of this Section.

1.5 SUBMITTALS

A. Section 01 33 00 - Submittal Procedures: Requirements for submittals.

B. As required by Section 40 05 51, Common Requirements Results for Process Valves.

C. Manufacturer Reports: Certify that equipment has been installed according to Manufacturer instructions.

1.6 CLOSEOUT SUBMITTALS

A. Section 01 70 00 - Execution and Closeout Requirements: Requirements for submittals.

B. Project Record Documents: Record actual locations of combination air valves.

1.7 QUALITY ASSURANCE

A. Materials in Contact with Potable Water: Certified to NSF 61 and NSF 372.

B. Manufacturer Quality Management System: Certified to ISO 9001.

C. Perform Work according to COMPANY standards.

1.8 QUALIFICATIONS

A. Manufacturer: Company specializing in manufacturing products specified in this Section with minimum three years' experience.

1.9 DELIVERY, STORAGE, AND HANDLING

A. Inspection: Accept materials on Site in Manufacturer's original packaging and inspect for damage.

B. Store materials according to Manufacturer instructions.

C. Protection:

1. Protect materials from moisture and dust by storing in clean, dry location remote from construction operations areas.

2. Furnish temporary end caps and closures on piping and fittings and maintain in place until installation.

3. Provide additional protection according to Manufacturer instructions.

1.10 EXISTING CONDITIONS

A. Field Measurements:

1. Verify field measurements prior to fabrication.

2. Indicate field measurements on Shop Drawings.

1.11 WARRANTY

A. Section 01 70 00 - Execution and Closeout Requirements: Requirements for warranties.

B. Furnish five-year Manufacturer's warranty for combination air valves.

PART 2 PRODUCTS

2.1 COMBINATION AIR VALVES FOR WATER SERVICE

A. Manufacturers:

1. Val-Matic 202C.2.

2. Substitutions: As approved by the Engineer.

3. Furnish materials according to COMPANY standards.

B. Description:

1. Type:

a. Fully automatic, float operated.

b. Body: Single.

2. Comply with AWWA C512.

3. Size: As indicated on Drawings.

4. Suitable for potable or raw water service.

5. Pressure Rating: 250 psig.

6. Maximum Operating Temperature: Water to 150 deg. F.

C. Materials:

1. Body and Cover: Cast iron, ASTM A126.

2. Float and Trim: Type 316 stainless steel.

3. Seats: Buna-N.

D. End Connections:

1. Size up to 4 Inches: Threaded, NPT.

2. Size Larger than 4 Inches: Flanged, ASME B16.1 for iron flanges and ASME B16.5 for steel flanges.

E. Accessories:

1. Backwash accessories, including inlet shutoff valve, blowoff valve, rubber supply hose, and quick-disconnect couplings.

2.2 INSULATION

A. As indicated on Drawings.

2.3 FINISHES

A. Prepare piping appurtenances for field finishes as specified in Section 09 90 00 - Painting and Coating.

2.4 SOURCE QUALITY CONTROL

A. Section 01 40 00 - Quality Requirements: Requirements for testing, inspection, and analysis.

B. Provide shop inspection and testing of completed assembly.

C. Certificate of Compliance:

1. If fabricator is approved by authorities having jurisdiction, submit certificate of compliance indicating Work performed at fabricator's facility conforms to Contract Documents.

2. Specified shop tests are not required for Work performed by approved fabricator.

PART 3 EXECUTION

3.1 EXAMINATION

A. Section 01 70 00 - Execution and Closeout Requirements: Requirements for installation examination.

B. Verify that field dimensions are as indicated on Drawings.

C. Inspect existing flanges for nonstandard bolt hole configurations or design and verify that new pipe and flanges mate properly.

3.2 PREPARATION

A. Section 01 70 00 - Execution and Closeout Requirements: Requirements for installation preparation.

B. Thoroughly clean end connections before installation.

C. Close pipe and equipment openings with caps or plugs during installation.

D. Surface Preparation: Clean surfaces to remove foreign substances.

3.3 INSTALLATION

A. According to Manufacturer instructions.

B. Provide access for operation, removal, and maintenance, and to avoid discharge to occupied areas or other equipment.

C. Installation Standards: Install Work according to COMPANY standards.

3.4 FIELD QUALITY CONTROL

A. Section 01 45 00 - Quality Control: Requirements for inspecting and testing.

B. Section 01 70 00 - Execution and Closeout Requirements: Requirements for testing, adjusting, and balancing.

C. Inspect for interferences and proper supports.

D. Testing:

1. As specified in Section 40 05 51 - Common Requirements for Process Valves.

2. Demonstrate operation without undue noise or vibration.

E. Manufacturer Services: Furnish services of Manufacturer's representative experienced in installation of products furnished under this Section for not less than 1 days on Site for installation, inspection, startup, field testing, and instructing COMPANY personnel in operation and maintenance of equipment.

F. Equipment Acceptance:

1. Adjust, repair, modify, or replace components failing to perform as specified and rerun tests.

2. Make final adjustments to equipment under direction of Manufacturer's representative.

3. Repair damaged coatings with material equal to original coating.

G. Furnish installation certificate from Equipment Manufacturer's representative attesting that equipment has been properly installed and is ready for startup and testing.

3.5 CLEANING

A. Section 01 70 00 - Execution and Closeout Requirements: Requirements for cleaning.

B. Keep interior of air release valves clean as installation progresses.

3.6 DEMONSTRATION

A. Section 01 70 00 - Execution and Closeout Requirements: Requirements for demonstration and training.

B. Demonstrate equipment startup, shutdown, routine maintenance, and emergency repair procedures to COMPANY personnel.

END OF SECTION

SECTION 40 71 13 - MAGNETIC FLOW METERS

PART 1 GENERAL

1.1 SUMMARY

A. Section Includes:

1. Magnetic flow meters.
2. Transmitters.
3. Indicators.
4. Recorders.
5. Integrators.

1.2 REFERENCE STANDARDS

A. American Water Works Association:

1. AWWA M6 - Water Meters - Selection, Installation, Testing, and Maintenance.
2. AWWA M33 - Flowmeters in Water Supply.

B. ASME International:

1. ASME B16.1 - Gray Iron Pipe Flanges and Flanged Fittings: Classes 25, 125, and 250.

C. National Electrical Manufacturer's Association (NEMA)

D. NSF International:

1. NSF 61 - Drinking Water System Components - Health Effects.
2. NSF 372 - Drinking Water System Components - Lead Content.

1.3 COORDINATION

A. Section 01 30 00 - Administrative Requirements: Requirements for coordination.

B. Coordinate Work of this Section with piping Work.

1.4 SUBMITTALS

A. Section 01 33 00 - Submittal Procedures: Requirements for submittals.

B. Product Data: Submit Manufacturer information for system materials and component equipment, including connection requirements.

1. Include product data sheets and equipment brochures showing standard products and specified accessories.

a. Mark data sheets to clearly show exact product and options being provided. Must Include:

1) Dimensional Drawings

2) Manufacturer's recommend upstream and downstream piping lengths

3) Materials of Construction

a) Sensor

b) Liner

c) Electrodes

d) Flanges

e) Process Connection

f) List of recommended spare parts

4) Accuracy

5) Range

6) Enclosure Rating

7) Classification Rating

8) Power Requirements

9) Output Options

C. Shop Drawings:

1. Indicate system materials and component equipment.

2. Submit installation requirements and other details.

D. Manufacturer's Certificate: Certify that products meet or exceed specified requirements.

E. Source Quality-Control Submittals: Indicate results of factory tests and inspections.

F. Field Quality-Control Submittals: Indicate results of Contractor-furnished tests and inspections.

G. Manufacturer Reports: Certify that equipment has been installed according to Manufacturer instructions.

H. Operation and maintenance manual and information.

I. Warranty information.

1.5 CLOSEOUT SUBMITTALS

A. Section 01 70 00 - Execution and Closeout Requirements: Requirements for submittals.

B. Project Record Documents: Record actual locations and final orientation of equipment and accessories.

1.6 QUALITY ASSURANCE

A. Ensure that materials of construction of wetted parts are compatible with process liquid.

B. Materials in Contact with Potable Water: Certified to NSF 61 and NSF 372.

C. Provide shop inspection and testing of meters according to AWWA M6.

D. Perform Work according to COMPANY standards.

1.7 QUALIFICATIONS

A. Manufacturer: Company specializing in manufacturing products specified in this Section with minimum three years' experience.

1.8 DELIVERY, STORAGE, AND HANDLING

A. Inspection: Accept materials on Site in Manufacturer's original packaging and inspect for damage.

B. Store equipment according to Manufacturer instructions.

C. Protection:

1. Protect materials from moisture and dust by storing in clean, dry location remote from construction operations areas.

2. Provide additional protection according to Manufacturer instructions.

1.9 WARRANTY

A. Section 01 70 00 - Execution and Closeout Requirements: Requirements for warranties.

B. Furnish minimum two-year Manufacturer's warranty for magnetic flow meters and appurtenant devices.

PART 2 PRODUCTS

2.1 SYSTEM DESCRIPTION

A. Furnish sensors, field preamplifiers, signal conditioners, offset and span adjustments, amplifiers, transducers, transmitters, control devices, interconnecting cables, and unit conversions and algorithms as required for application.

2.2 MAGNETIC FLOW METERS

A. Manufacturers:

1. Endress+Hauser Promag 400 W Flow Converter

2. Substitutions: As approved by the Engineer.

3. Furnish materials according to COMPANY standards.

B. Description: Low-frequency, electromagnetic induction-type flow meter, producing a linear signal directly proportional to flow rate, consisting of flow tube, signal cable, and transmitter.

C. Performance and Design Criteria:

1. Design: According to AWWA M33.

D. Flow Rate Range: As indicated on Drawings and in schedule following END OF SECTION.

E. Size: As indicated on Drawings and in schedule following END OF SECTION.

F. Flow Tubes:

1. Material: stainless steel.

2. Length: As indicated on Drawings and in schedule following END OF SECTION.

3. End Connections: Flanged, ASME B16.1, carbon steel.

G. Electrodes:

1. Type 316L stainless steel.

2. Self-cleaning.

H. Accuracy: Plus or minus 1 percent of actual flow rate over a 10:1 range.

I. Provide adjustment for zero and span.

J. Accessories:

1. [**Provide automatic, nonmechanical electrode cleaning system without taking meter out of service.**]

2. Furnish cable between transmitter and receiver.

2.3 INDICATING TRANSMITTER

A. Flow meter shall be provided with an indicating transmitter supplied as a unit with the flowmeter.

B. The transmitter display shall indicate simultaneous flow rate and total flow with three Totalizers (eg. forward, reverse and net total) and user-selectable engineering units, readout of diagnostic remedy messages.

C. The transmitter shall be mounted integrally or remotely as specified in the instrument schedule. The transmitter shall incorporate a universal 100-240 VAC/18-30 VDC power supply.

The transmitter housing will carry a NEMA 4X rating and shall be constructed to prevent moisture ingress, promote corrosion resistance, and be impervious to saline environments.

D. The Transmitter shall be microprocessor based and be completely interchangeable with other converters of the same type

E. The transmitter shall retain all setup parameters and accumulated measurements internally in non-volatile memory in the event of power failure. The memory unit shall be transferrable from a damaged unit or used for a duplicate device with no loss of device parameters or data stored.

F. The transmitter and sensor shall include a method to verify flow meter performance to the original manufacturer specifications.

G. The transmitter shall allow local programming that can be operated through the enclosure window without opening the electrical enclosure.

H. The measurement signals from the sensor to the transmitter shall be conducted up to 500 feet to the transmitter. See plan drawings for estimated length required.

I. The transmitter output(s) shall be integral to the magnetic flowmeter transmitter electronics. Using an external third party signal converter is unacceptable.

J. The transmitter output shall provide 4-20 mA output as well as a totaling pulse

1. Pulse output selectable settable for flows from 1 to 500 gallons per pulse.

2. The basic outputs can be altered in the field by programming. All outputs shall be galvanically isolated from each other and all other circuits.

3. The transmitter shall provide the capability to test all outputs for proper operation to assist in commissioning.

K. The transmitter shall be protected against voltage spikes from the power source with internal transient protection. Power consumption shall be no more than 16 VA, independent of meter size.

L. Internal circuitry to drive flow signal to zero upon flow meter determined empty pipe condition.

M. Accessories:

1. Current signal output simulation.

2. Empty pipe detection.

3. Self-diagnostics.

4. Automatic zero adjustment.

5. Stainless-steel sunshield.

6. Signal Cable: Provided by Flow Meter Manufacturer.

2.4 INTEGRATORS

A. Manufacturers:

1. Substitutions: As approved by the Engineer.

2. Furnish materials according to COMPANY standards.

B. Description:

1. Totalize flow in specified units.

2. Interface with specified flow meter assembly.

3. Accuracy: Plus or minus 0.25 percent of full scale.

2.5 OPERATION

A. Control Power:

1. Wiring: As specified in Section 26 05 03 - Equipment Wiring Connections.

2. 120-V ac, single phase, 60 Hz.

3. Furnish local transformers as required.

B. Enclosures: NEMA 250 Type 4X

2.6 MOUNTING

A. Contractor shall provide all components, piping, wiring, accessories and labor required for a complete, workable and integrated system.

B. Instruments shall be mounted as shown on the plans. All metal mounting hardware shall be stainless steel.

PART 3 EXECUTION

3.1 EXAMINATION

A. Section 01 70 00 - Execution and Closeout Requirements: Requirements for installation examination.

B. Verify that items provided by other Sections of Work are ready to receive Work of this Section.

3.2 INSTALLATION

A. Coordinate location and orientation of flow meter with final equipment installations.

B. Ensure that instruments are located to be easily accessible for maintenance.

C. Installation Standards: Install Work according to COMPANY standards.

3.3 FIELD QUALITY CONTROL

A. Section 01 45 00 - Quality Control: Requirements for inspecting and testing.

B. Section 01 70 00 - Execution and Closeout Requirements: Requirements for testing, adjusting, and balancing.

C. Testing:

1. Test and calibrate flow meter to demonstrate that it meets specified accuracy requirements.

2. Comply with AWWA M6.

D. Manufacturer Services: Furnish services of Manufacturer's representative experienced in installation of products furnished under this Section for not less than one day on Site for installation, inspection, startup, field testing, and instructing COMPANY personnel in operation and maintenance of equipment.

E. Equipment Acceptance:

1. Adjust, repair, modify, or replace components failing to perform as specified and rerun tests.

2. Make final adjustments to equipment under direction of Manufacturer's representative.

F. Furnish installation certificate from Equipment Manufacturer's representative attesting that equipment has been properly installed and is ready for startup and testing.

3.4 DEMONSTRATION

A. Section 01 70 00 - Execution and Closeout Requirements: Requirements for demonstration and training.

B. Demonstrate equipment startup, shutdown, routine maintenance, and emergency repair procedures to COMPANY personnel.

END OF SECTION

3.5 ATTACHMENTS

A. Flow Meter Schedule:

1. FE/FIT-131:

a. Location: Well 3 bypass line.

b. Type: magnetic

c. Pipe Diameter: 4”.

d. Flow Rate Range: 0 to 300 gpm.

e. Output Signal: 4-20 mA flow and totalizing pulse.

f. Process Fluid: well water.

2. FE/FIT-351:

a. Location: between IPS and arsenic filters.

b. Type: magnetic

c. Pipe Diameter: 6”.

d. Flow Rate Range: 0 to 350 gpm.

e. Output Signal: 4-20 mA flow and totalizing pulse.

f. Process Fluid: water.

3. FE/FIT-372:

a. Location: Well 3 water prior to arsenic filters.

b. Type: magnetic

c. Pipe Diameter: 6”.

d. Flow Rate Range: 0 to 300 gpm.

e. Output Signal: 4-20 mA flow and totalizing pulse.

f. Process Fluid: well water.

4. FE/FIT-431:

a. Location: backwash line from arsenic filters.

b. Type: magnetic

c. Pipe Diameter: 4”.

d. Flow Rate Range: 0 to 250 gpm.

e. Output Signal: 4-20 mA flow and totalizing pulse.

f. Process Fluid: backwash water.

5. FE/FIT-511:

a. Location: between backwash tank and IPS.

b. Type: magnetic

c. Pipe Diameter: 3”.

d. Flow Rate Range: 0 to 50 gpm.

e. Output Signal: 4-20 mA flow and totalizing pulse.

f. Process Fluid: backwash water.

6. FE/FIT-551:

a. Location: between sludge decant wet well and backwash tank.

b. Type: magnetic

c. Pipe Diameter: 3”.

d. Flow Rate Range: 0 to 150 gpm.

e. Output Signal: 4-20 mA flow and totalizing pulse.

f. Process Fluid: backwash water.

7. Flowmeters called out in Microvi Set:

a. FIT-103

1) Location: Well 1 raw water to nitrate reactors.

2) Type: magnetic

3) Pipe Diameter: 6”.

4) Flow Rate Range: 0 to 300 gpm.

5) Output Signal: 4-20 mA flow and totalizing pulse.

6) Process Fluid: well water

b. FIT-301

1) Location: influent to nitrate reactor #1.

2) Type: magnetic

3) Pipe Diameter: 3”.

4) Flow Rate Range: 0 to 250 gpm.

5) Output Signal: 4-20 mA flow and totalizing pulse.

6) Process Fluid: filtered water

c. FIT-302

1) Location: influent to nitrate reactor #2.

2) Type: magnetic

3) Pipe Diameter: 3”.

4) Flow Rate Range: 0 to 250 gpm.

5) Output Signal: 4-20 mA flow and totalizing pulse.

6) Process Fluid: filtered water

d. FIT-303

1) Location: influent to nitrate reactor #3.

2) Type: magnetic

3) Pipe Diameter: 3”.

4) Flow Rate Range: 0 to 250 gpm.

5) Output Signal: 4-20 mA flow and totalizing pulse.

6) Process Fluid: filtered water

e. FIT-304

1) Location: dilute chlorine to nitrate reactor #1.

2) Type: magnetic

3) Pipe Diameter: 1”.

4) Flow Rate Range: 0 to [100] gpm.

5) Output Signal: 4-20 mA flow and totalizing pulse.

6) Process Fluid: chlorinated water

f. FIT-305

1) Location: dilute chlorine to nitrate reactor #2.

2) Type: magnetic

3) Pipe Diameter: 1”.

4) Flow Rate Range: 0 to [100] gpm.

5) Output Signal: 4-20 mA flow and totalizing pulse.

6) Process Fluid: chlorinated water

g. FIT-306

1) Location: dilute chlorine to nitrate reactor #3.

2) Type: magnetic

3) Pipe Diameter: 1”.

4) Flow Rate Range: 0 to [100] gpm.

5) Output Signal: 4-20 mA flow and totalizing pulse.

6) Process Fluid: chlorinated water

SECTION 40 05 06 - COUPLINGS, ADAPTERS, AND SPECIALS FOR PROCESS PIPING

PART 1 GENERAL

1.1 SUMMARY

A. Section Includes:

1. Pipe penetrations.
2. Restrained joints.
3. Flexible connections.
4. Expansion joints.
5. Sleeve-type couplings.

1.2 DEFINITIONS

A. Firestopping (Through-Penetration Protection System): The sealing or stuffing material or assembly placed in spaces between and penetrations through building materials to arrest movement of fire, smoke, heat, and hot gases through fire-rated construction.

B. FM: Factory Mutual Insurance Company; FM Global is the communicative name of the company.

C. WH: Warnock Hersey; indicates compliance to relevant building codes, association criteria, and product safety and performance standards.

1.3 REFERENCE STANDARDS

A. American Water Works Association:

1. AWWA C219 - Bolted, Sleeve-Type Couplings for Plain-End Pipe.

B. American Welding Society:

1. AWS D1.1/D1.1M - Structural Welding Code - Steel.

C. ASME International:

1. ASME A13.1 - Scheme for the Identification of Piping Systems.
2. ASME B31.3 - Process Piping.
3. ASME B31.9 - Building Services Piping.
4. ASME Boiler and Pressure Vessel Code (BPVC), Section IX - Welding, Brazing, and Fusing Qualifications.

D. ASTM International:

1. ASTM D2000 - Standard Classification System for Rubber Products in Automotive Applications.

2. ASTM E84 - Standard Test Method for Surface Burning Characteristics of Building Materials.

3. ASTM E119 - Standard Test Methods for Fire Tests of Building Construction and Materials.

4. ASTM E814 - Standard Test Method for Fire Tests of Penetration Firestop Systems.

5. ASTM E1966 - Standard Test Method for Fire-Resistive Joint Systems.

E. Expansion Joint Manufacturers Association, Inc.:

1. EJMA Standards.

F. NSF International:

1. NSF 61 - Drinking Water System Components - Health Effects.

2. NSF 372 - Drinking Water System Components - Lead Content.

G. UL:

1. UL 263 - Fire Tests of Building Construction and Materials.

2. UL 1479 - Fire Tests of Through-Penetration Firestops.

3. UL 2079 - Tests for Fire Resistance of Building Joint Systems.

1.4 COORDINATION

A. Coordinate Work of this Section with installation of valves and equipment.

1.5 SUBMITTALS

A. Section 01 33 00 - Submittal Procedures: Requirements for submittals.

B. Product Data:

1. Submit Manufacturer catalog information for each specified product.

2. Firestopping: Submit data on product characteristics, performance, and limitation criteria.

3. Flexible Pipe Connectors: Indicate maximum temperature and pressure rating, face-to-face length, live length, hose wall thickness, hose convolutions per foot and per assembly, fundamental frequency of assembly, braid structure, and total number of wires in braid.

4. Expansion Joints: Indicate maximum temperature, pressure rating, and expansion compensation.

C. Shop Drawings:

1. Identification:

a. Submit list of wording, symbols, letter size, and color coding for pipe identification.

b. Comply with ASME A13.1.

2. Indicate restrained joint details and materials.

3. Submit layout drawings showing piece numbers and location, indicating restrained joint locations.

4. Indicate layout of piping systems, including flexible connectors, expansion joints and compensators, loops, offsets, and swing joints.

D. Manufacturer's Certificate: Certify that products meet or exceed specified requirements.

E. Welder Certificates: Certify welders and welding procedures employed on Work, verifying AWS qualification within previous 12 months.

F. Delegated Design Submittals: Submit signed and sealed Shop Drawings with design calculations and assumptions for:

1. Flexible connectors.

2. Expansion joints.

3. Pipe Restraints:

a. Determine restrained lengths and submit joint restraint details.

b. Use joint restraint devices specifically designed for applications as described in Manufacturer data.

G. Manufacturer Instructions: Submit special procedures and setting dimensions.

H. Source Quality-Control Submittals: Indicate results of factory tests and inspections.

I. Field Quality-Control Submittals: Indicate results of Contractor-furnished tests and inspections.

J. Qualifications Statements:

1. Welders: Qualify procedures and personnel according to AWS D1.1/D1.1M.

1.6 CLOSEOUT SUBMITTALS

A. Section 01 70 00 - Execution and Closeout Requirements: Requirements for submittals.

B. Project Record Documents: Record actual locations of piping appurtenances.

C. Identify and describe unexpected variations to pipe routing or discovery of uncharted utilities.

1.7 QUALITY ASSURANCE

A. Materials in Contact with Potable Water: Certified to NSF Standards 61 and 372.

B. Perform Work according to ASME B31.9 for installation of piping systems and according to AWS D1.1/D1.1M for welding materials and procedures.

C. Perform Work according to COMPANY standards.

1.8 QUALIFICATIONS

A. Welders: AWS qualified within previous 12 months for employed weld types.

1.9 DELIVERY, STORAGE, AND HANDLING

A. Inspection: Accept materials on Site in Manufacturer's original packaging and inspect for damage.

B. Store materials according to Manufacturer instructions.

C. Protection:

1. Protect materials from moisture and dust by storing in clean, dry location remote from construction operations areas.

2. Furnish temporary end caps and closures on piping and fittings and maintain in place until installation.

3. Provide additional protection according to Manufacturer instructions.

1.10 EXISTING CONDITIONS

A. Field Measurements:

1. Verify field measurements prior to fabrication.

2. Indicate field measurements on Shop Drawings.

1.11 WARRANTY

A. Section 01 70 00 - Execution and Closeout Requirements: Requirements for warranties.

PART 2 PRODUCTS

2.1 PIPE PENETRATIONS – NOT USED

2.2 FLEXIBLE CONNECTIONS

A. Manufacturers:

1. Furnish materials according to COMPANY standards.

B. Steel Piping:

1. Inner Hose: Stainless steel.

2. Exterior Sleeve: Stainless steel.

3. Pressure Rating: As shown in the Drawings/Schedule.
4. Joints: As specified for pipe joints.
5. Size: Use pipe-sized units.
6. Maximum Offset: 3/4 inch on each side of installed center line.

C. Copper Piping:

1. Inner Hose: Bronze.
2. Exterior Sleeve: Braided bronze.
3. Pressure Rating: As shown in the Drawings/Schedule.
4. Joints: As specified for pipe joints.
5. Size: Use pipe-sized units.
6. Maximum Offset: 3/4 inch on each side of installed center line.

2.3 EXPANSION JOINTS

A. Manufacturers:

1. Viking Johnson
2. Substitutions: As approved by Engineer.
3. Furnish materials according to COMPANY's standards.

B. Performance and Design Criteria:

1. Bellow Design: According to Section C of EJMA Standards.

C. Stainless-Steel Bellows Type:

1. Pressure Rating: As shown in the Drawings/Schedule.
2. Maximum Compression: 1-3/4 inches .
3. Maximum Extension: 1/4 inch.
4. Joint: As specified for pipe joints.
5. Size: Use pipe-sized units.
6. Application: Steel piping 3 inches and smaller.

D. External Ring-Controlled Stainless-Steel Bellows Type:

1. Pressure Rating: As shown in the Drawings/Schedule.
2. Maximum Compression: 15/16 inch.

3. Maximum Extension: 5/16 inch.

4. Maximum Offset: 1/8 inch.

5. Joint: Flanged.

6. Size: Use pipe-sized units.

7. Accessories: Internal flow liner.

8. Application: Steel piping 3 inches and larger.

E. Two-Ply Bronze Bellows Type:

1. Description: Bronze with anti-torque device, limit stops, and internal guides.

2. Pressure Rating: As shown in the Drawings/Schedule.

3. Maximum Compression: 1-3/4 inches.

4. Maximum Extension: 1/4 inch.

5. Size: Use pipe-sized units.

6. Application: Copper piping.

2.4 EXPANSION LOOPS – NOT USED

2.5 SLEEVE-TYPE COUPLINGS

A. Manufacturers:

1. Smith Blair

2. Substitutions: As approved by Engineer.

3. Furnish materials according to COMPANY's standards.

B. Description:

1. Comply with AWWA C219.

2. Middle Ring: Ductile iron.

3. Followers: Ductile iron.

4. Gaskets:

a. Material: EPDM.

b. Comply with ASTM D2000.

5. Bolts: Steel.

C. Finishes:

1. Buried Couplings: Factory epoxy coated.

2.6 INSULATION – NOT USED

2.7 FINISHES

A. Prepare piping appurtenances for field finishes as specified in Section 09 90 00 - Painting and Coating.

2.8 SOURCE QUALITY CONTROL

A. Section 01 40 00 - Quality Requirements: Requirements for testing, inspection, and analysis.

1. Provide shop inspection and testing of completed assemblies.

B. Certificate of Compliance:

1. If Manufacturer is approved by authorities having jurisdiction, submit certificate of compliance indicating Work performed at Manufacturer's facility conforms to Contract Documents.

2. Specified shop tests are not required for Work performed by approved manufacturer.

PART 3 EXECUTION

3.1 EXAMINATION

A. Section 01 70 00 - Execution and Closeout Requirements: Requirements for installation examination.

B. Verify that field dimensions are as indicated on Drawings.

C. Inspect existing flanges for nonstandard bolt hole configurations or design and verify that new pipe and flanges mate properly.

D. Verify that openings are ready to receive sleeves.

E. Verify that pipe plain ends to receive sleeve-type couplings are smooth and round for 12 inches from pipe ends.

F. Verify that pipe outside diameter conforms to Sleeve Manufacturer's requirements.

3.2 PREPARATION

A. Section 01 70 00 - Execution and Closeout Requirements: Requirements for installation preparation.

B. Cleaning: Thoroughly clean end connections before installation.

C. Close pipe and equipment openings with caps or plugs during installation.

D. Surface Preparation: Clean surfaces to remove foreign substances.

3.3 INSTALLATION

A. According to ASME B31.3.

B. Coating: Finish piping appurtenances as specified in Section 09 90 00 - Painting and Coating for service conditions.

C. Flexible Connections: Install flexible couplings at connections to equipment and where indicated on Drawings.

D. Expansion Joints:

1. Install flexible couplings and expansion joints at connections to equipment and where indicated on Drawings.

2. If expansion joint is supplied with internal sleeve, indicate flow direction on outside of joint.

E. Air Release and Vacuum Breakers: Provide vacuum breakers as indicated on Drawings.

F. Backflow Preventers:

1. Install with nameplate and test cock accessible.

2. Install according to local code requirements.

3. Do not install in vertical position.

G. Disinfection: Disinfect potable water piping as specified in Section 33 13 00 – Testing and Disinfection of Water Utility Piping.

3.4 FIELD QUALITY CONTROL

A. Section 01 45 00 - Quality Control: Requirements for inspecting and testing.

B. Section 01 70 00 - Execution and Closeout Requirements: Requirements for testing, adjusting, and balancing.

C. After installation, inspect for proper supports and interferences.

D. Repair damaged coatings with material equal to original coating.

3.5 CLEANING

A. Section 01 70 00 - Execution and Closeout Requirements: Requirements for cleaning.

B. Keep equipment interior clean as installation progresses.

3.6 ATTACHMENTS

A. Pipe Schedule:

1. Ductile Iron:

a. Material No.: 11.

b. Reference Standard: AWWA C115.

c. Joints:

1) Type: Mechanical.

2) AWWA C110 and C111.

d. Fittings:

1) Material: Ductile iron.

2) AWWA C110.

e. Gaskets: Rubber.

f. Test Pressure: 200 psig.

2. Copper:

a. Material No.: 17.

b. Type: Seamless.

c. Reference Standard: ASTM B251.

d. Joints: Brazed.

e. Fittings:

1) Material: Wrought copper.

2) ASME B16.29.

f. Test Pressure: 200 psig.

3. PVC:

a. Material No.: 21.

b. Reference Standard: ASTM D1785.

c. Joints: Solvent weld.

d. Fittings:

1) Material: Cast iron.

2) AWWA C111.

e. Test Pressure: 125 psig.

END OF SECTION

SECTION 40 05 13 - COMMON WORK RESULTS FOR PROCESS PIPING

PART 1 GENERAL

1.1 SUMMARY

This Section applies to the furnishing and installation of piping inside a building, structure, enclosure piping and miscellaneous yard piping.

1.2 REFERENCE STANDARDS

A. American Society of Mechanical Engineers (ASME):

1. ASME B1.20.1 Pipe Threads, General Purpose (inch)
2. ASME A13.1 - Scheme for the Identification of Piping Systems.
3. ASME B16.5 Pipe Flanges and Flanged Fittings, Steel Nickel Alloy, and other Special Alloys
4. ASME B16.15 - Cast Copper Alloy Threaded Fittings: Classes 125 and 250.
5. ASME B31.3 - Process Piping.
6. ASME B31.9 - Building Services Piping.

B. ASTM International (ASTM):

1. ASTM A53 - Standard Specification for Pipe, Steel, Black and Hot-Dipped, Zinc-Coated, Welded and Seamless.
2. ASTM A307 - Specification for Carbon Steel Bolts and Studs, 6,000 psi Tensile.
3. ASTM A325 - Specification for High-Strength Bolts for Structural Steel Joints.
4. ASTM B43 - Standard Specification for Seamless Red Brass Pipe, Standard Sizes.
5. ASTM B88 - Standard Specification for Seamless Copper Water Tube.
6. ASTM B584 - Standard Specification for Copper Alloy Sand Castings for General Applications.
7. ASTM D792 - Test Methods for Specific Gravity and Density of Plastics by Displacement.
8. ASTM D1248 - Standard Specification for Polyethylene Plastics Extrusion Materials for Wire and Cable.
9. ASTM D1784 - Standard Specification for Rigid Poly(Vinyl Chloride) (PVC) Compounds and Chlorinated Poly(Vinyl Chloride) (CPVC) Compounds.
10. ASTM D1785 - Standard Specification for Poly(Vinyl Chloride) (PVC) Plastic Pipe, Schedules 40, 80, and 120.
11. ASTM D2000 - Classification System for Rubber Products in Automotive Applications.

12. ASTM D2466 - Standard Specification for Poly(Vinyl Chloride) (PVC) Plastic Pipe Fittings, Schedule 40.

13. ASTM D2855 - Standard Practice for Making Solvent-Cemented Joints with Poly(Vinyl Chloride) (PVC) Pipe and Fittings.

14. ASTM D3139 - Standard Specification for Joints for Plastic Pressure Pipes Using Flexible Elastomeric Seals.

C. American Water Works Association (AWWA):

1. AWWA C200 - Steel Water Pipe - 6 In. (150 mm) and Larger.

2. AWWA C207 - Steel Pipe Flanges for Water Works Service, Sizes 4 in through 144 in.

3. AWWA C219 - Bolted, Sleeve-Type Couplings for Plain-End Pipe.

4. AWWA C509 - Resilient-Seated Gate Valves for Water Supply Service.

5. AWWA C510 - Double Check Valve Backflow Prevention Assembly.

6. AWWA C511 - Reduced-Pressure Principal Backflow Prevention Assembly.

7. AWWA C606 - Grooved and Shouldered Joints.

8. AWWA C900 - Polyvinyl Chloride (PVC) Pressure Pipe and Fabricated Fittings, 4 In. Through 12 In. (100 mm Through 300 mm), for Water Transmission and Distribution.

D. American Welding Society (AWS):

1. AWS D1.1 - Structural Welding Code.

E. Manufacturers Standardization Society (MSS) of the Valve and Fittings Industry:

1. MSS SP-58 - Pipe Hangers and Supports - Materials, Design, Manufacture, Selection, Application, and Installation.

F. NSF International (NSF):

1. NSF 61 - Drinking Water System Components - Health Effects.

2. NSF 372 - Drinking Water System Components - Lead Content.

1.3 COORDINATION

A. Coordinate installation of specified items with installation of valves and equipment.

1.4 SUBMITTALS

A. Section 01 33 00 - Submittal Procedures: Requirements for submittals.

B. Product Data:

1. Submit Manufacturer catalog information for each product specified.

C. Shop Drawings:

1. Identification:

a. Submit list of wording, symbols, letter size, and color coding for pipe identification.

b. Comply with ASME A13.1.

2. Provide all necessary dimensions and details on pipe joints, restraints, fittings, fitting specials, valves, appurtenances, design calculations, and material lists.

3. Provide detailed layout, spool, or fabrication drawings which show all pipe spools, spacers, adapters, connectors, fittings, couplings, and pipe supports necessary to accommodate the equipment and valves provided in a complete and functional system.

D. Manufacturer's Statement: Certifying pipe fabrication and products meet or exceed specified requirements.

E. Welder Certificates: Certify welders and welding procedures employed on Work, verifying AWS and ASME qualification within previous 12 months.

F. Manufacturer Instructions: Submit special procedures and setting dimensions.

G. Source Quality-Control Submittals: Indicate results of shop tests and inspections.

H. Field Quality-Control Submittals: Indicate results of Contractor-furnished tests and inspections.

1.5 CLOSEOUT SUBMITTALS

A. Project Record Documents: Record actual locations of piping appurtenances.

B. Identify and describe unexpected variations to pipe routing or discovery of uncharted utilities.

1.6 QUALITY ASSURANCE

A. Drawings:

1. Piping layouts shown in the Drawings are intended to define the general layout, configuration, routing, method of support, pipe size, and pipe type. The mechanical drawings are not pipe construction or fabrication drawings. It is the Contractor's responsibility to develop the details necessary to construct all mechanical piping systems, to accommodate the specific equipment provided, and to provide and install all spools, spacers, adapters, connectors, etc., for a complete and functional system.

B. Inspection:

1. All pipe shall be subject to inspection at the place of manufacture.

2. During the manufacture of the pipe, the Engineer shall be given access to all areas where manufacturing is in progress and shall be permitted to make all inspections necessary to confirm compliance with the Specifications.

C. Welding:

1. All welding procedures used to fabricate pipe shall be prequalified under the provisions of ANSI/AWS D1.1.

2. Welding procedures shall be required for, but not necessarily limited to, longitudinal and girth or spiral welds for pipe cylinders, spigot, and bell ring attachments, reinforcing plates and ring flange welds, and plates for lug connections.

D. Welders:

1. Skilled welders, welding operators, and tackers who have had adequate experience in the methods and materials to be used shall do all welding.

2. Welders shall be qualified under the provisions of ANSI/AWS D1.1 by an independent local approved testing agency prior to commencing work on the pipeline.

3. Machines and electrodes similar to those used in the Work shall be used in qualification tests.

4. The Contractor shall furnish all material and bear the expense of qualifying welders.

E. Tests: Except where otherwise specified, all materials used in the manufacture of the pipe shall be tested in accordance with the applicable Specifications and Standards. Welds shall be tested as specified. The Contractor shall perform all tests at no additional cost to COMPANY.

1.7 MATERIAL DELIVERY, STORAGE, AND INSPECTION

A. Inspection:

1. Accept materials on Site in Manufacturer's original packaging and inspect for damage.

2. All piping materials, fittings, valves, and accessories shall be delivered in a clean and undamaged condition.

B. Storage:

1. Store materials according to Manufacturer instructions.

2. Store materials off the ground, to provide protection against oxidation caused by ground contact

C. Protection:

1. Protect materials from moisture and dust by storing in clean, dry location remote from construction operations areas.

2. Furnish temporary end caps and closures on piping and fittings and maintain in place until installation.

3. Provide additional protection according to Manufacturer instructions.

D. All defective or damaged materials shall be replaced with new materials.

1.8 EXISTING CONDITIONS

A. Field Measurements:

1. Verify field measurements prior to fabrication.

2. Indicate field measurements on Shop Drawings.

PART 2 PRODUCTS

2.1 GENERAL

A. All materials in contact with potable water shall conform to ANSI/NSF Standard 61 and meet the "lead free" requirements of the Safe Drinking Water Act amendment, effective January 4, 2014, as per the lead content evaluation procedures outlined in NSF/ANSI Standard 372.1.

1. All fittings shall either be cast or permanently stamped with markings identifying the item as complying with NSF 61 per the requirements of NSF 372 for "lead free".

2. All brass in contact with potable water shall comply with ASTM B584.

B. Unless specified otherwise or indicated differently in the Drawings, all piping systems and process piping materials shall be as listed in the table below or as shown on the Drawings:

Service	Material
Drainage/Sanitary Sewer Yard Piping	See Division 33.
Building Sanitary Drain and Vent Piping	See Division 22
Domestic Water Piping	See Division 22
Exposed ≥ 4"	Class 52 Ductile Iron
Buried ≥ 4"	Class 52 Ductile Iron
Submerged/Buried < 4"	Stainless Steel - Type 316 Schedule 40 Threaded - ASTM A 312 Fittings Welded or Threaded
Exposed < 4"	As shown in the Drawings
Buried < 4"	As shown in the Drawings
Miscellaneous Pipelines	As shown in the Drawings

2.2 DUCTILE IRON PIPE AND FITTINGS

A. See Article 2.1.B, Ductile Iron Pipe of Section 33 11 10, Water Utility Distribution and Transmission Piping.

2.3 STEEL PIPE AND FITTINGS

A. General Service Piping:

1. ASTM A53, seamless, Grade B.

2. Schedule: 40, unless indicated otherwise on Drawings.

2.4 COPPER PIPE AND FITTINGS

A. Description:

1. Seamless; ASTM B88.

2. Type:

a. Type L, hard drawn.

b. For pipe under floor slabs, underground or cast in concrete: Type K, annealed, seamless.

B. Joints:

1. Compression.

2. Manufacturer: Mueller Model 110 or equal

C. Dissimilar Metals: See Dielectric Unions specified herein.

2.5 BRASS PIPE AND FITTINGS

A. Pipe: ASTM B43, chrome plated.

B. Fittings:

1. ASTM B584, brass.

2. ASTM B16.15.

C. Joints:

1. Mechanical compression.

2. Threaded: Tapered and smooth threads, ASME B1.20.1 and ASTM B43.

D. Dissimilar Metals: See Dielectric Unions specified herein.

2.6 POLYVINYL CHLORIDE (PVC) WATER PIPE AND FITTINGS

A. PVC Pipe and Fittings:

1. Four-inch diameter and smaller:

a. Pipe: ASTM D1785, Schedule 40.

b. Fittings: ASTM D2466, Schedule 40.

c. Joints: Socket, solvent-welded, ASTM D2855.

d. Materials: ASTM D1784, minimum cell classification 12545-C.

2. Six-inch diameter and larger:

a. Pipe: AWWA C900, Class 235.

b. Fittings: AWWA C111, cast iron.

c. Joints: ASTM D3139, compression gasket ring.

d. Materials: ASTM D1784, minimum cell classification 12545-C.

2.7 FLEXIBLE TUBING

A. Polyethylene thermoplastic tubing:

1. Standard weight, conforming to ASTM D1248 Type 1, Class A, Category 4, Grade E5.

2.8 GALVANIZED STEEL PIPE AND FITTINGS

A. Pipe: Seamless, or electric resistance welded, ASTM A53, Schedule 40.

B. Joints: Threaded.

C. Fittings:

1. Threaded, 150-pound malleable iron, galvanized, ASTM A197 or ASTM A47, dimensions conforming to ANSI B16.3.

2. Unions, 300-pound malleable iron, galvanized with dimensions conforming to ANSI B16.3, brass to iron seat.

3. Thread lubricant shall be Teflon tape or joint compound that is insoluble in water.

D. Buried Service:

1. Galvanized pipes shall be spirally wrapped with polyvinyl chloride or polyethylene pressure sensitive tape, applied with a suitable primer.

2. The wrap shall have a nominal thickness of 20 mils, consisting of either one layer of 20-mil tape or two separate layers of 10-mil tape.

3. Before the primer and wrap is applied, the piping shall be thoroughly cleaned so that all surfaces shall be dry and free of dirt, dust, rust, oil scale, oil, grease, or other foreign matter.

4. Any solvents used shall be totally volatile so as to leave no trace of oil.

5. Weld spatters, burrs, or sharp points and edges shall be removed by chiseling, ball peening or filling.

6. After thorough cleaning, the piping shall be coated with a primer applied in accordance with the Tape Manufacturer's recommendations. Spiral wrappings shall be applied with an overlap of at least 1-inch.

2.9 STAINLESS STEEL TUBING AND FITTINGS

A. Type 316 stainless steel, unless otherwise specified or shown in the Plans.

B. Meet the material standards set forth in ASTM A269.

C. Fittings: ASTM A276 and ASTM A182.

1. Threaded fittings: National pipe thread meeting the requirements of ASME B1.20.1.

2. Compression fittings: Two-ferrule, mechanical grip design.

D. Unions: Provide to facilitate installation and maintenance of tubing.

E. Manufacturer:

1. Swagelock, or equal.

2.10 STAINLESS STEEL PIPE AND FITTINGS

A. Pipe:

1. Size: 4 inches and smaller, schedule 80, type 304, unless otherwise specified.

2. Conforming to ASME B36.19 dimensions.

3. Conforming to ASTM A312 material requirements.

B. Fittings: Conform to ASME B16.11 dimensions and ASTM A182 material requirements.

C. Threads: Conform to ASME B1.20.1.

D. Socket welds: Conform to ASME B16.11.

2.11 FLEXIBLE COUPLINGS

A. Description:

1. Sleeve-type, couplings. Comply with AWWA C219.

2. Minimum design pressure rating: 150 pounds per square inch (psi).

3. Middle Ring: As required for coupling based upon connecting pipe materials, steel, or ASTM A536, ductile iron.

4. Followers: As required for coupling based upon connecting pipe materials, steel, or ASTM A536, ductile iron.

5. Gaskets:

a. Material: EPDM.

b. Comply with ASTM D2000.

6. Bolts:

    a. Buried: Steel.

    b. Submerged: Stainless steel.

7. Center Pipe Stop: Required where shown on the Drawings.

B. Finishes:

1. Buried Couplings, Bolts: Factory epoxy coated.

C. Manufacturers:

1. For ductile iron and steel pipe:

    a. Viking Johnson.

    b. Smith-Blair.

    c. Or equal.

2. For PVC pipe:

    a. Romac, Model 501 or equal.

3. For flanged steel and ductile pipe:

    a. Dresser, Style 128 or equal.

2.12 RESTRAINED FLANGE ADAPTERS FOR DUCTILE IRON PIPE

A. Description:

1. ASTM A536, ductile iron.

2. Flange bolt circles compatible with ANSI/AWWA C115/A21.15.

3. Restraint for the flange adapter shall consist of a plurality of individually actuated gripping wedges to maximize restraint capability. Torque limiting actuating screws shall be used to insure proper initial set of the gripping wedges.

4. Capable of deflection during assembly or permit lengths of pipe to be field cut to allow a minimum 0.6-inch gap between the end of the pipe and the mating flange without affecting the integrity of the seal.

5. Safety factor of 2:1 minimum.

6. Manufacturer:

    a. Smith Blair Flange-Lock 911, or equal.

2.13 FLANGED INSULATING JOINTS

A. Set shall include a full faced gasket, a full-length insulating sleeve for each flange bolt, and two insulating washers and two steel washers for each bolt.

1. Gaskets:

   a. Full-face, comply with ASME 16.21.

   b. Non-asbestos and non-phenolic compressed sheet packing with nitrile rubber binder.

   c. Manufacturer: Garlock, Style 3505, or equal.

2. Insulating sleeves:

   a. G-10 glass epoxy.

   b. Extend the full width of both flanges, except where one flange hole is threaded where the sleeve shall extend through one flange and the gasket.

3. Insulating washers:

   a. G-10 glass epoxy.

   b. 1/8-inch thickness.

4. Washers:

   a. Buried: Cadmium plated steel.

   b. Submerged: Stainless steel.

B. The complete assembly shall have an ANSI/AWWA pressure rating equal to or greater than that of the flanges between which is installed.

C. After assembly, the joint shall be tested for continuity. Electrical resistance between flanges and between each bolt and each flange shall be not less than 100,000 ohms.

2.14 INSULATING UNION

A. Description:

1. Material: Galvanized malleable iron with a ground joint.

2. Iron pipe threads: Conform to ANSI B2.1.

3. Insulations: Nylon, bonded, and molded onto the metal body.

4. Union: Rated for the operating and test pressures of the pipe system.

5. Joint connections to copper alloy pipe and tube shall be copper solder or threaded brass ground joints.

6. Isolation Barrier: Impervious to water.

2.15 BACKFLOW PREVENTERS

A. Manufacturers:

1. Nibco.
2. Watts.

B. Reduced-Pressure Backflow Preventers:

1. Size: 3/4-inch to 2 inches.
2. Comply with AWWA C511.
3. Materials:
   a. Body: Bronze.
   b. Internal Parts: Bronze.
   c. Springs: Stainless steel.
4. Check Valves:
   a. Quantity: Two, operating independently.
   b. Spring loaded.
   c. Third Check Valve: Open under back pressure in case of diaphragm failure.
5. Differential Pressure Relief Valve:
   a. Type: Diaphragm.
   b. Located between check valves.
6. Ball Valves:
   a. Type: Full port, resilient seated.
   b. Quantity: Two.
   c. Operation: Quarter turn.
   d. Material: Bronze.
7. Accessories: Strainer and test cocks.

C. Reduced-Pressure Backflow Preventers with Detector Assembly:

1. Size: 3/4-inch to 2 inches.
2. Comply with AWWA C511.
3. Materials:

a. Body: Bronze.

b. Internal Parts: Bronze.

c. Springs: Stainless steel.

4. Check Valves:

a. Quantity: Two, operating independently.

b. Spring loaded.

c. Third Check Valve: Open under back pressure in case of diaphragm failure.

5. Differential Pressure Relief Valve:

a. Type: Diaphragm.

b. Located between check valves.

6. Ball Valves:

a. Type: Full port, resilient seated.

b. Quantity: Two.

c. Operation: Quarter turn.

d. Material: Bronze.

7. Accessories: Strainer and test cocks.

D. Reduced-Pressure Backflow Preventers:

1. Size: 3 inches to 10 inches.

2. Comply with AWWA C511.

3. Materials:

a. Heavy-duty cast iron.

b. Finish: Fusion epoxy coating inside and outside.

4. Check Valves:

a. Quantity: Two, operating independently.

b. Spring loaded.

c. Third Check Valve: Open under back pressure in case of diaphragm failure.

5. Differential Pressure Relief Valve:

a. Type: Diaphragm.

b. Located between check valves.

6. Gate Valves:

a. Type: Resilient seated according to AWWA C509.

b. Quantity: Two.

c. Operation: Non-rising stem.

7. Accessories:

a. Strainer.

b. Four resilient-seated ball valve test cocks.

E. Reduced-Pressure Backflow Preventers with Detector Assembly:

1. Size: 3 inches to 10 inches.

2. Comply with AWWA C511.

3. Materials:

a. Heavy-duty cast iron.

b. Finish: Fusion epoxy coating inside and outside.

4. Check Valves:

a. Quantity: Two, operating independently operating.

b. Spring loaded.

c. Third Check Valve: Open under back pressure in case of diaphragm failure.

5. Differential Pressure Relief Valve:

a. Type: Diaphragm.

b. Located between check valves.

6. Gate Valves:

a. Type: Resilient seated according to AWWA C509.

b. Quantity: Two.

c. Operation: Non-rising stem.

7. Accessories:

a. Strainer.

b. Four resilient-seated ball valve test cocks.

F. Double Check Valve Backflow Preventer Assemblies:

1. Size: 1/2-inch to 3 inches.
2. Comply with AWWA C510.
3. Materials:
    a. Body: Bronze.
    b. Internal Parts: Corrosion resistant.
    c. Springs: Stainless steel.
4. Check Valves:
    a. Quantity: Two, operating independently.
    b. Intermediate atmospheric vent.
5. Ball Valves:
    a. Type: Full port, resilient seated.
    b. Quantity: Two.
    c. Operation: Quarter turn.
    d. Material: Bronze.
6. Accessories: Strainer and test cocks.

G. Double Check Valve Backflow Preventer with Detector Assembly:

1. Size: 1/2-inch to 3 inches.
2. Comply with AWWA C510.
3. Materials:
    a. Body: Bronze.
    b. Internal Parts: Corrosion resistant.
    c. Springs: Stainless steel.
4. Check Valves:
    a. Quantity: Two, operating independently.
    b. Intermediate atmospheric vent.
5. Ball Valves:
    a. Type: Full port, resilient seated.

b. Quantity: Two.

c. Operation: Quarter turn.

d. Material: Bronze.

6. Accessories: Strainer and test cocks.

H. Double Check Valve Backflow Preventer Assemblies:

1. Size: 2-1/2 inches to 10 inches.

2. Comply with AWWA C510.

3. Materials:

a. Heavy-duty cast iron.

b. Finish: Fusion epoxy coating inside and outside.

c. Springs: Stainless steel.

4. Check Valves:

a. Quantity: Two, operating independently.

5. Gate Valves:

a. Type: Resilient seated according to AWWA C509.

b. Quantity: Two.

c. Operation: Non-rising stem.

6. Accessories: Strainer.

I. Double Check Valve Backflow Preventer with Detector Assembly:

1. Size: 2-1/2 inches to 10 inches.

2. Comply with AWWA C510.

3. Materials:

a. Heavy-duty cast iron.

b. Finish: Fusion epoxy coating inside and outside.

c. Springs: Stainless steel.

4. Check Valves:

a. Quantity: Two, operating independently.

5. Gate Valves:

a. Type: Resilient seated according to AWWA C509.

b. Quantity: Two.

c. Operation: Non-rising stem.

6. Accessories: Strainer.

J. Double Check Valve Backflow Preventer Assemblies:

1. Size: 4 inches to 12 inches.

2. Comply with AWWA C510.

3. Materials:

a. Main Valve Body: Series 300 stainless steel.

b. Internal Metal Parts: Series 300 stainless steel.

4. Check Valves:

a. Quantity: Two, operating independently.

b. Material: Stainless steel.

5. Gate Valves:

a. Type: Resilient seated according to AWWA C509.

b. Quantity: Two.

c. Material: Stainless steel.

d. End Connections: Flanged.

e. Operation: Non-rising stem.

6. Accessories: Cast iron strainer.

K. Double Check Valve Backflow Preventer with Detector Assembly:

1. Size: 4 inches to 12 inches.

2. Comply with AWWA C510.

3. Materials:

a. Main Valve Body: Series 300 stainless steel.

b. Internal Metal Parts: Series 300 stainless steel.

4. Check Valves:

a. Quantity: Two, operating independently.

b. Material: Stainless steel.

5. Gate Valves:

a. Type: Resilient seated according to AWWA C509.

b. Quantity: Two.

c. Material: Stainless steel.

d. End Connections: Flanged.

e. Operation: Non-rising stem.

6. Accessories: Cast iron strainer.

2.16 DISMANTLING JOINT

A. Description:

1. Comply with AWWA C219, where applicable.

2. Self-contained flanged restrained joint fitting, including both flanged components and sufficient harness bars to withstand the imposed thrust.

3. Design: No part of the restraint system extends outside the flange diameter. The internal bore shall match that of the pipe system.

4. Dismantling joints will allow for a minimum of 2 inches of longitudinal adjustment.

5. Furnish as a complete assembly consisting of spigot piece, flange adaptor, tie bars, and gasket.

6. The gasket seal and compression stud and nut arrangement shall be independent of the tie rod restraint system. Tie Rod diameter shall be compatible with the corresponding bolt diameter of the mating flange. The Tie Rod restraint system shall be capable of withstanding the full pressure thrust that the pipe system can develop at no more than 50 percent of the yield strength of tie rod material.

7. Pressure Rating:

a. Determined by the flange configuration, and all commonly used flanges shall be available.

b. Design pressure rating shall be equal to or greater than the mating flanges.

c. Dismantling joints will be specially fabricated to accommodate pressure requirements with ANSI B16.5 or ANSI B16.47 300-pound class flanges, depending on size of dismantling joint.

8. Lining and Coating:

a. Shop-applied fusion bonded epoxy coating applied by fluidized bed method, complying with the requirements of NSF 61 and AWWA C550 as applicable.

b. As an alternative, a shop-coat primer suitable for field applied coatings can be supplied.

9. Flanges: Flat-faced, rated to pressure requirements as shown on the Drawings.

a. Where design pressure is greater than 300 psi, flanges shall conform to ASME B16.5 and ASME B16.47 300-pound class.

B. Materials:

1. Spigot piece: Steel, ASTM A283 Grade C.

2. Flange adaptor:

a. Up to 12-inch diameter: Ductile iron, ASTM A536 Grade 65-45-12.

b. Above 12-inch diameter: Steel, ASTM A283 Grade C.

3. Tie bars: ASTM A193 Grade B7 threaded rod with rolled threads.

4. Gasket: EPDM Grade E.

5. Nuts, Bolts, and Washers: Type 304 stainless steel.

C. Manufacturer:

1. Viking Johnson.

2. Smith Blair.

3. Or equal.

2.17 PIPE SUPPORTS

A. Floor Support for Pipe:

1. Flanged Pipe Support:

a. Construction:

1) Adjustable vertical pipe support, flange plate, extension pipe from base cup to top collar cup with threaded stud.

2) Bolts directly to flange.

3) Anchorable base plate.

b. Material: Steel, comply with ASTM A36.

c. Finish: Hot-dipped galvanized.

d. Manufacturers:

1) Atlas Piping Product APS-FLG.

2) Or equal.

2. Cradle Pipe Support:

a. Construction:

1) Adjustable vertical pipe support with saddle strap, extension pipe from base cup to top collar cup with threaded stud.

2) Anchorable base plate.

b. Material: Steel, comply with ASTM A36.

c. Finish: Hot-dipped galvanized.

d. Manufacturers:

1) Atlas Piping Product APS-SAD.

2) Or equal.

3. U-Bolt Pipe Support:

a. Construction:

1) Adjustable vertical pipe support with U-bolt, extension pipe from base cup to top collar cup with threaded stud.

2) Material: Steel, comply with ASTM A36.

3) Finish: Hot-dipped galvanized.

4) Manufacturers:

a) Atlas Piping Product APS-UB.

b) Or equal.

2.18 PIPE PENETRATIONS

A. Sleeves for Pipes through Walls and Floors:

1. Material: Galvanized steel.

2. Thickness: Schedule 40.

3. Inside surface of all wall sleeves shall be coated with coal-tar.

4. Annular space between penetrating pipe and wall sleeve shall be filled with an approved permanently flexible sealant.

5. Diameter of wall sleeve shall be as shown in the Drawings.

B. Mechanical Sleeve Seals:

1. Description: Modular mechanical type, consisting of interlocking synthetic rubber links shaped to continuously fill annular space between object and sleeve, connected with bolts and pressure plates causing rubber sealing elements to expand when tightened, providing watertight seal and electrical insulation.

2. Manufacturer: Link-Seal or equal.

C. Pipes Cast-In Walls and Floors:

1. Material: Ductile iron or steel pipe, as required by the Drawings and the intended service.

2. Diameter: As shown in the Drawings.

3. End Type: As shown in the Drawings.

D. Seep Rings:

1. Material: 3/8-inch-thick steel plate conforming to ASTM A36, unless otherwise noted.

2. Inside diameter: Equal to the outside diameter of the pipe or sleeve to which it is attached plus 1/4-inch.

3. Outside diameter: As shown in the Drawings.

4. Attach to the pipe or sleeve by means of a continuous seal weld located on both sides of the ring.

2.19 PIPE COATINGS

A. See Section 09 90 00, Painting and Coating.

PART 3 EXECUTION

3.1 GENERAL

A. Furnish and install all piping systems shown and specified, in accordance with the requirements of the Contract Documents. Each system shall be complete with all necessary fittings, hangers, supports, anchors, expansion joints, flexible connectors, valves, accessories, heat tracing, insulation, lining and coating, testing, disinfection, excavation, backfill, and encasement, to provide a functional installation.

B. Pipe shall be installed in accordance with good trade practice. The methods employed in handling and placing of pipe, fittings, and equipment shall be such as to insure that after installation and testing they are in good condition. Should damage occur to the pipe, fitting or equipment, repairs satisfactory to the Engineer shall be made.

3.2 INSTALLATION

A. Buried Piping Systems:

1. Establish elevations of buried piping with not less than 3 feet of cover.
2. Remove scale and dirt from inside of piping before assembly, as may be required.
3. Excavate pipe trench as specified in Section 31 23 17, Trenching.
4. Install pipe to accurate lines, elevations, and grades as shown on the Drawings.
5. Where grades are not shown, pipe shall be laid to grade between control elevations shown on the Drawings.
6. Place bedding material at trench bottom to provide uniform bedding for piping.
7. Level bedding material in one continuous layer not exceeding 6 inches compacted depth.
8. Install pipe on prepared bedding.
9. Route pipe in straight line.
10. Install pipe to allow for expansion and contraction without stressing of pipe or joints.
11. Install shutoff and drain valves at locations as indicated on Drawings and as specified in this Section.
12. Pipe Cover and Backfilling:
    a. Backfill trench as specified in Section 31 23 17, Trenching.
13. All buried non-ferrous piping shall be installed with detectable tracer tape.
    a. Tape shall be buried 12 inches above the top of the pipe or as recommended by Manufacturer.
    b. Tape shall be continuous and labeled the same as the piping system.
14. Install ductile iron fittings according to AWWA C600.

B. Interior Piping Systems:

1. Install non-conducting dielectric connections wherever joining dissimilar metals.
2. Establish elevations of buried piping outside valve vault to obtain not less than 3 feet of cover.
3. Prepare exposed, unfinished pipe, fittings, supports, and accessories ready for finish painting as specified in Section 09 90 00, Painting and Coating.
4. Install water piping according to ASME B31.9.
5. Install unions downstream of valves and at equipment or apparatus connections.

6. Install brass male adapters each side of valves in copper piped system, solder adapters to pipe.

7. Install ductile iron fittings according to AWWA C600.

C. Backflow Preventer Assemblies:

1. Install backflow preventers of type, size, and capacity indicated.

2. Comply with applicable code and authority having jurisdiction.

3. Install airgap fitting on units with atmospheric vent connection.

4. Pipe relief outlet drain to nearest floor drain.

5. Do not install bypasses around backflow preventers.

D. Pipe Supports and Hangers

1. Install pipe supports according to MSS SP-58 and ASME B31.10.

2. All pipe shall be secured in place by use of blocking, hangers, brackets, clamps or other approved methods, and the weight thereof shall be carried independently of pump casings or equipment.

3. Special hangers and supports are shown on the Drawings.

4. The Contractor shall be responsible for determining the location of and providing all additional supports.

5. Hanger supports shall be as noted below with at least one support adjacent to the joint for each length of pipe, at each change in direction and at each branch connection. Sufficient hangers shall be provided to maintain proper slope without sagging. Support spacing shall not exceed Manufacturer's recommendations, nor as listed below.

Pipe	Maximum Support Spacing (Feet)
Steel Pipe	
Under 3 inches	6
3 inches and Over	12
Cast or Ductile Iron	
Under 4 inches	6
4 inches and Over	12
Stainless Steel and Galvanized Iron	
Under 1-1/2 inches	4
1-1/2 inches to 4 inches	6
Over 4 inches	12
Copper Pipe	6
PVC Pipe	

Pipe	Maximum Support Spacing (Feet)
Under 2-1/2 inches	4
2-1/2 inches and Over	6

6. Spacing of clamps for support of vertical piping shall be close enough to keep the pipe in alignment as well as to support the weight of the piping and contents unless other vertical support is shown, but in no case shall be more than 12 feet.

7. Provide adjustable hangers for all pipes, complete with adjusters, swivels, rods, etc. Size hangers to clear insulation and guide where required, as well as support piping. All rigid hangers shall provide a means of vertical adjustment after erection. Hanger rods shall be machine threaded. Continuous threaded rods will not be allowed.

8. Clevis or band-type hangers (B-Line FIG B3100) or equal shall be provided as required. Strap hangers not permitted.

9. Provide floor stands, wall bracing, concrete piers, etc., for all lines running near the floors or near walls and which cannot be properly supported or suspended by the walls or floors. Pipelines near concrete or masonry walls may also be hung by hangers carried from wall brackets at a higher level than pipe. Hanging of any pipe from another is prohibited.

10. Equipment shall be positioned and aligned so that no strain shall be induced within the equipment during or subsequent to the installation of pipework.

11. When temporary supports are used, they shall be sufficiently rigid to prevent any shifting or distortion of the piping or related work.

E. Pipe Penetrations:

1. Exterior Watertight Entries: Seal with mechanical sleeve seals or grout, as shown in the Drawings.

2. Whenever a pipeline of any material terminates at or through a structural wall or floor, install piping or sleeve in advance of pouring of concrete required for the particular installation.

3. Plastic pipe shall not be cast in concrete or masonry walls.

4. Set sleeves in position in forms and provide reinforcing around sleeves.

5. Size sleeves large enough to allow for movement due to expansion and contraction and provide for continuous insulation wrapping.

6. Extend sleeves through floors 1-inch above finished floor level and caulk sleeves.

7. Pipe other than concrete, to be cast in water-bearing walls or more than 4 feet below grade shall have seep rings.

8. All buried piping entering structures shall have a flexible connection installed less than 2 feet outside the structure line or as close to the wall as practical.

3.3 CLEANING, TESTING, AND DISINFECTION

A. Testing and Disinfection: Piping shall be hydrostatically tested, flushed, and disinfected as specified in Section 33 13 00, Testing and Disinfection of Water Utility Piping.

END OF SECTION

SECTION 40 05 13.07 - HANGERS AND SUPPORTS FOR PROCESS PIPING

PART 1 GENERAL

1.1 SUMMARY

A. Section Includes:

1. Pipe hangers and supports.
2. Hanger rods.
3. Structural attachments.
4. Pipe guides.
5. Formed-steel channel.

1.2 REFERENCE STANDARDS

A. American Welding Society:

1. AWS D1.1/D1.1M - Structural Welding Code - Steel.

B. ASME International:

1. ASME B31.1 - Power Piping.
2. ASME B31.9 - Building Services Piping.

C. ASTM International:

1. ASTM A36/A36M - Standard Specification for Carbon Structural Steel.
2. ASTM A47/A47M - Standard Specification for Ferritic Malleable Iron Castings.
3. ASTM A181/A181M - Standard Specification for Carbon Steel Forgings, for General-Purpose Piping.
4. ASTM A576 - Standard Specification for Steel Bars, Carbon, Hot-Wrought, Special Quality.

D. Manufacturers Standardization Society of the Valve and Fittings Industry:

1. MSS SP-58 - Pipe Hangers and Supports - Materials, Design, Manufacturer, Selection, Application, and Installation.

1.3 COORDINATION

A. Coordinate Work of this Section with piping and equipment connections specified in other Sections and as indicated on Drawings.

1.4 PREINSTALLATION MEETINGS

A. Convene minimum one week prior to commencing Work of this Section.

1.5 SUBMITTALS

A. Section 01 33 00 - Submittal Procedures: Requirements for submittals.

B. Product Data: Submit Manufacturer information, including load capacity.

C. Shop Drawings: Indicate system layout with location, including critical dimensions, sizes, hanger and support locations, and details of trapeze hangers, anchors, and guides.

D. Manufacturer's Certificate: Certify that products meet or exceed specified requirements.

E. Welder Certificates: Certify welders and welding procedures employed on Work, verifying AWS qualification within previous 12 months.

F. Delegated Design Submittals:

1. Submit signed and sealed Shop Drawings with design calculations and assumptions for load carrying capacity of trapeze, multiple pipe, and riser support hangers.

2. Indicate sizing methods and calculations used to determine load carrying capacity of trapeze, multiple pipe, and riser support hangers.

G. Manufacturer Instructions: Submit special procedures and assembly of components.

1.6 QUALITY ASSURANCE

A. Perform Work according to AWS D1.1/D1.1M for welding hanger and support attachments to building structure.

B. Perform Work according to COMPANY’s standards.

1.7 QUALIFICATIONS

A. Manufacturer: Company specializing in manufacturing Products specified in this Section with minimum three years' experience.

B. Fabricator: Company specializing in fabricating products specified in this Section with minimum three years' experience.

1.8 DELIVERY, STORAGE, AND HANDLING

A. Inspection: Accept materials on Site in Manufacturer's original packaging and inspect for damage.

B. Store materials according to Manufacturer instructions.

C. Protection:

1. Protect materials from moisture and dust by storing in clean, dry location remote from construction operations areas.

2. Provide additional protection according to Manufacturer instructions.

1.9 EXISTING CONDITIONS

A. Field Measurements:

1. Verify field measurements prior to fabrication.

2. Indicate field measurements on Shop Drawings.

1.10 WARRANTY

A. Section 01 70 00 - Execution and Closeout Requirements: Requirements for warranties.

B. Furnish five-year Manufacturer's warranty for pipe hangers and supports.

PART 2 PRODUCTS

2.1 PIPE HANGERS AND SUPPORTS

A. Manufacturers:

1. Substitutions: As approved by the Engineer.

2. Furnish materials according to COMPANY's standards.

B. Description:

1. Comply with ASME B31.9.

2. Provide means of vertical adjustment after erection.

3. Pipe Sizes 1/2 to 1-1/2 Inches:

a. Material: Steel; ASTM A36/A36M.

b. Configuration: Split ring.

c. Swivel: Adjustable.

4. Pipe Sizes 2 Inches and Larger:

a. Material: Steel; ASTM A36A36.

b. Configuration: Clevis.

c. Swivel: Adjustable.

5. Multiple or Trapeze Hangers: Steel channels with welded spacers and hanger rods.

6. Wall Support for Pipe Sizes 3 Inches and Smaller: Cast-iron J-hook.

7. Wall Support for Pipe Sizes 4 Inches and Larger: Welded steel bracket.

8. Vertical Support: Riser clamp.

9. Floor Supports: Cast-iron adjustable pipe saddle, lock nut, nipple, floor flange, and steel support.

C. Performance and Design Criteria:

1. Pipe Hangers:

a. Design for pipe movement without disengagement of supported pipe.

b. Allow for expansion and contraction of piping while eliminating undue stress on piping appurtenances and equipment.

c. Provide linkage to permit lateral or axial movement where anticipated.

d. If horizontal pipe movement is greater than 1/2 inch, or if hanger rod deflection from the vertical is greater than 4 degrees from cold to hot position of pipe, offset hanger rod and structural attachment to maintain rod vertical in hot position.

2. Heat Transmission: Design supports, hangers, anchors, and guides to prevent excessive heat from being transmitted to building structure, equipment, or piping appurtenances.

3. Riser Supports: Support risers on each floor with riser clamps and lugs, independent of connected horizontal piping.

4. Point Loads:

a. Support plastic piping containing meters, valves, appurtenances, and other point loads on both sides.

b. Avoid point loads on plastic piping by providing extra-wide pipe saddles or galvanized-steel shields.

5. Noise Reduction: Wrap copper tubes located within buildings in a 2-inch wide strip of rubber at each pipe support, bracket, clip, and hanger.

2.2 HANGER RODS

A. Material: Steel; ASTM A576.

B. End Connections: Threaded both ends.

C. Size: Comply with ASME B31.1 and as indicated on Drawings.

2.3 STRUCTURAL ATTACHMENTS

A. Concrete Inserts:

1. Manufacturers:

a. Substitutions: As approved by the Engineer.

b. Furnish materials according to COMPANY standards.

2. Case: Malleable iron with steel shell and expander plug.

3. Connection: Threaded, with lateral adjustment.

4. Size: To suit threaded hanger rods.

B. Mounting Brackets: Welded steel; ASTM A36/A36M.

C. Beam Clamps:

1. Manufacturers:

a. Substitutions: As approved by the Engineer.

b. Furnish materials according to COMPANY standards.

2. Comply with MSS SP-58.

3. Material: Steel; ASTM A36/A36M.

4. Size: Suitable for load to be supported.

5. Anchoring: Locknuts and set screws.

6. Furnish reversible top or bottom flange.

D. Riser Clamps:

1. Manufacturers:

a. Substitutions: As approved by the Engineer.

b. Furnish materials according to COMPANY standards.

2. Material: Steel; ASTM A36/A36M.

3. Support of Copper Tubing: Furnish copper-plated clamp.

E. Offset Clamps:

1. Manufacturers:

a. Substitutions: As approved by the Engineer.

b. Furnish materials according to COMPANY standards.

2. Configuration: Double leg, two pieces.

2.4 PIPE GUIDES

A. Intermediate Guides:

1. Pipes 6 Inches and Smaller: Pipe clamp with oversize pipe sleeve.

2. Pipes 8 Inches and Larger: U-bolts with double nuts.

B. Alignment Guides:

1. Pipes 8 Inches and Smaller:

a. Material: Galvanized steel.

b. Type: Spider or sleeve.

2. Pipes 10 Inches and Larger:

a. Material: Galvanized steel.

b. Type: Roller.

2.5 FORMED-STEEL CHANNEL

A. Manufacturers:

1. Substitutions: As approved by the Engineer.

2. Furnish materials according to COMPANY standards.

B. Description:

1. Material: Galvanized steel.

2. Thickness: 12 gauge.

3. Mounting Holes: 1-1/2 inches o.c.

PART 3 EXECUTION

3.1 EXAMINATION

A. Section 01 70 00 - Execution and Closeout Requirements: Requirements for installation examination.

B. Verify that field dimensions as indicated on Drawings.

3.2 INSTALLATION

A. Obtain permission from Engineer before using powder-actuated anchors.

B. Do not drill or cut structural members.

C. Inserts:

1. Placement:

a. Concrete forms.

b. Reinforced concrete slabs and sides of reinforced concrete beams.

2. Piping 4 Inches and Larger: Provide hooked rod to concrete reinforcement section.

3. Concrete Slabs Forming Finished Ceiling: Locate inserts flush with slab surface.

D. Pipe Hangers and Supports:

1. Comply with ASME 31.9.

2. Support horizontal piping as indicated on Drawings.

3. Install hangers with minimum 1/2-inch space between finished covering and adjacent Work.

4. Place hangers within 12 inches of each horizontal elbow.

5. Minimum Vertical Adjustment: 1-1/2 inches.

6. Supports:

a. Independently of equipment.

b. Horizontal Cast-Iron Piping: Adjacent to each hub, with maximum 5-foot spacing between hangers.

c. Riser Piping: Independent of connected horizontal piping.

7. Piping in Parallel at Same Elevation: Provide multiple pipe or trapeze hangers.

8. Clamps and Brackets:

a. Provide welded steel brackets if piping is to be run adjacent to building walls or columns.

b. Use beam clamps if piping is to be suspended from building steel.

c. Insulated Piping: Provide two bolted clamps designed to accommodate insulated piping.

d. Use offset clamps if pipes are indicated as offset from wall surfaces.

E. Insulation:

1. Provide clearance in hangers and from structure and other equipment for installation of insulation.

F. Equipment Bases and Supports:

1. Housekeeping Pads: As indicated on Drawings.

2. Supports:

a. Material: Steel.

b. Brace and fasten with flanges bolted to structure.

c. Anchor Bolts and Accessories: Use templates furnished with equipment.

G. Finishes:

1. Prime coat exposed steel hangers and supports as specified in Section 09 90 00 - Painting and Coating.

2. Hangers and supports located in crawlspaces, pipe shafts, and suspended ceiling spaces are not considered as exposed.

3.3 ATTACHMENTS

END OF SECTION

SECTION 40 05 13.13 - STEEL PROCESS PIPE

PART 1 GENERAL

1.1 SUMMARY

A. Section Includes:

1. Steel pipe.
2. Steel tube.
3. Cement-mortar-lined steel pipe.
4. Fittings.
5. Accessories.

1.2 REFERENCE STANDARDS

A. American Water Works Association:

1. AWWA C200 - Steel Water Pipe, 6 In. (150 mm) and Larger.
2. AWWA C203 - Coal-Tar Protective Coatings and Linings for Steel Water Pipe.
3. AWWA C205 - Cement-Mortar Protective Lining and Coating for Steel Water Pipe - 4 In. (100 mm) and Larger - Shop Applied.
4. AWWA C206 - Field Welding of Steel Water Pipe.
5. AWWA C207 - Steel Pipe Flanges for Waterworks Service, Sizes 4 In. Through 144 In. (100 mm Through 3,600 mm).
6. AWWA C208 - Dimensions for Fabricated Steel Water Pipe Fittings.
7. AWWA C210 - Liquid-Epoxy Coatings and Linings for Steel Water Pipe and Fittings.
8. AWWA C213 - Fusion-Bonded Epoxy Coating for the Interior and Exterior of Steel Water Pipelines.
9. AWWA C222 - Polyurethane Coatings for the Interior and Exterior of Steel Water Pipe and Fittings.
10. AWWA C550 - Protective Epoxy Interior Coatings for Valves and Hydrants.
11. AWWA C606 - Grooved and Shouldered Joints.
12. AWWA M11 - Steel Water Pipe - A Guide for Design and Installation.

B. American Welding Society:

1. AWS D1.1/D1.1M - Structural Welding Code - Steel.

C. ASME International:

1. ASME B1.20.1 - Pipe Threads, General Purpose, Inch.
2. ASME B16.1 - Gray Iron Pipe Flanges and Flanged Fittings: Classes 25, 125, and 250.
3. ASME B16.3 - Malleable Iron Threaded Fittings: Classes 150 and 300.
4. ASME B16.5 - Pipe Flanges and Flanged Fittings: NPS 1/2 through NPS 24 Metric/Inch Standard.
5. ASME B16.9 - Factory-Made Wrought Buttwelding Fittings.
6. ASME B16.11 - Forged Fittings, Socket-Welding and Threaded.
7. ASME B16.20 - Metallic Gaskets for Pipe Flanges: Ring-Joint, Spiral-Wound, and Jacketed.
8. ASME B16.21 - Nonmetallic Flat Gaskets for Pipe Flanges.
9. ASME B16.42 - Ductile Iron Pipe Flanges and Flanged Fittings: Classes 150 and 300.
10. ASME B36.10M - Welded and Seamless Wrought Steel Pipe.
11. ASME Boiler and Pressure Vessel Code (BPVC) Section IX - Welding, Brazing, and Fusing Qualifications.

D. ASTM International:

1. ASTM A47/A47M - Standard Specification for Ferritic Malleable Iron Castings.
2. ASTM A53/A53M - Standard Specification for Pipe, Steel, Black and Hot-Dipped, Zinc-Coated, Welded and Seamless.
3. ASTM A105/A105M - Standard Specification for Carbon Steel Forgings for Piping Applications.
4. ASTM A106/A106M - Standard Specification for Seamless Carbon Steel Pipe for High-Temperature Service.
5. ASTM A108 - Standard Specification for Steel Bar, Carbon and Alloy, Cold-Finished.
6. ASTM A193/A193M - Standard Specification for Alloy-Steel and Stainless Steel Bolting for High Temperature or High Pressure Service and Other Special Purpose Applications.
7. ASTM A194/A194M - Standard Specification for Carbon Steel, Alloy Steel, and Stainless Steel Nuts for Bolts for High Pressure or High Temperature Service, or Both.
8. ASTM A216/A216M - Standard Specification for Steel Castings, Carbon, Suitable for Fusion Welding, for High-Temperature Service.
9. ASTM A334/A334M - Standard Specification for Seamless and Welded Carbon and Alloy-Steel Tubes for Low-Temperature Service.

10. ASTM A423/A423M - Standard Specification for Seamless and Electric-Welded Low-Alloy Steel Tubes.

11. ASTM A576 - Standard Specification for Steel Bars, Carbon, Hot-Wrought, Special Quality.

12. ASTM A727/A727M -Standard Specification for Carbon Steel Forgings for Piping Components with Inherent Notch Toughness.

13. ASTM A858/A858M - Standard Specification for Heat-Treated Carbon Steel Fittings for Low-Temperature and Corrosive Service.

14. ASTM A865/A865M - Standard Specification for Threaded Couplings, Steel, Black or Zinc-Coated (Galvanized) Welded or Seamless, for Use in Steel Pipe Joints.

15. ASTM C33/C33M - Standard Specification for Concrete Aggregates.

16. ASTM C150/C150M - Standard Specification for Portland Cement.

17. ASTM C600 - Standard Test Method of Thermal Shock Test on Glass Pipe.

18. ASTM D1418 - Standard Practice for Rubber and Rubber Latices - Nomenclature.

19. ASTM D3308 - Standard Specification for PTFE Resin Skived Tape.

20. ASTM E438 - Standard Specification for Glasses in Laboratory Apparatus.

21. ASTM F336 - Standard Practice for Design and Construction of Nonmetallic Enveloped Gaskets for Corrosive Service.

22. ASTM F1476 - Standard Specification for Performance of Gasketed Mechanical Couplings for Use in Piping Applications.

23. ASTM F1545 - Standard Specification for Plastic-Lined Ferrous Metal Pipe, Fittings, and Flanges.

E. NSF International:

1. NSF 61 - Drinking Water System Components - Health Effects.

2. NSF 372 - Drinking Water System Components - Lead Content.

F. SSPC - The Society for Protective Coatings:

1. SSPC-SP 6 - Commercial Blast Cleaning.

1.3 COORDINATION

A. Section 01 30 00 - Administrative Requirements: Requirements for coordination.

B. Coordinate Work of this Section with piping and equipment connections specified in other Sections and indicated on Drawings.

1.4 PREINSTALLATION MEETINGS

A. Convene minimum one week prior to commencing Work of this Section.

1.5 SUBMITTALS

A. Section 01 33 00 - Submittal Procedures: Requirements for submittals.

B. Product Data: Submit Manufacturer information regarding pipe and fittings.

C. Shop Drawings: Indicate layout of piping systems, including equipment, critical dimensions, sizes, and material lists.

D. Manufacturer's Certificate: Certify that products meet or exceed specified requirements.

E. Welder Certificates: Submit welders' certification of compliance with AWS D1.1/D1.1M, verifying qualification within previous 12 months.

F. Delegated Design Submittals: Submit signed and sealed Shop Drawings with piping layout and with design calculations and assumptions for pipe sizing methods.

G. Source Quality-Control Submittals: Indicate results of shop tests and inspections.

H. Field Quality-Control Submittals: Indicate results of Contractor-furnished tests and inspections.

I. Qualifications Statements:

1. Submit qualifications for Manufacturer, installer, and licensed professional.

2. Submit Manufacturer's approval of installer.

1.6 CLOSEOUT SUBMITTALS

A. Section 01 70 00 - Execution and Closeout Requirements: Requirements for submittals.

B. Project Record Documents: Record actual locations of piping, valves and other appurtenances, connections, and invert or centerline elevations for gravity or pressurized pipe, respectively.

C. Identify and describe unexpected variations to subsoil conditions or discovery of uncharted utilities.

1.7 QUALITY ASSURANCE

A. Permanently mark each length of pipe with Manufacturer's name or trademark and indicate conformance to standards.

B. Materials in Contact with Potable Water: Certified according to NSF 61 and NSF 372.

C. Perform Work according to COMPANY standards.

1.8 QUALIFICATIONS

A. Manufacturer: Company specializing in manufacturing products specified in this Section with minimum three years' documented experience.

B. Installer: Company specializing in performing Work of this Section with minimum three years' documented experience and approved by Manufacturer.

C. Welders: AWS qualified within previous 12 months for employed weld types.

D. Licensed Professional: Professional engineer experienced in design of specified Work and licensed in State of Arizona.

1.9 DELIVERY, STORAGE, AND HANDLING

A. Section 01 60 00 - Product Requirements: Requirements for transporting, handling, storing, and protecting products.

B. Inspection: Accept materials on Site in Manufacturer's original packaging and inspect for damage.

C. Store materials according to Manufacturer instructions.

D. Protection:

1. Protect materials from moisture and dust by storing in clean, dry location remote from construction operations areas.

2. Protect piping and appurtenances by storing off ground.

3. Provide additional protection according to Manufacturer instructions.

1.10 AMBIENT CONDITIONS

A. Section 01 50 00 - Temporary Facilities and Controls: Requirements for ambient condition control facilities for product storage and installation.

B. Minimum Conditions: Do not store or handle uninstalled lined pipes or fittings at temperatures below zero degrees F.

1.11 EXISTING CONDITIONS

A. Field Measurements:

1. Verify field measurements prior to fabrication.

2. Indicate field measurements on Shop Drawings.

PART 2 PRODUCTS

2.1 STEEL PIPE AND FITTINGS

A. General Service Piping:

1. Comply with ASTM A53.

2. Type: Welded.

3. Schedule: As indicated on Drawings.

4. Finish: Hot-dip galvanized.

B. High-Temperature Service Piping:

1. Comply with ASTM A106/A106M.

2. Type: Cold drawn.

3. Schedule: As indicated on Drawings.

4. Dimensions: Comply with ASME B36.10M.

C. Water Piping:

1. Comply with AWWA C200.

2. Type: Fabricated pipe.

3. Minimum Wall Thickness:

a. Pipe Diameter 8 Inches and Smaller: 0.375 inch.

b. Pipe Diameter Greater Than 8 Inches: 0.500 inch.

4. Fittings and Special Sections: Comply with AWWA C208.

5. Flanges:

a. Comply with AWWA C207.

b. Type: Slip on.

6. Field Welding Materials: Comply with AWWA C206.

D. Joints:

1. Description: Welded.

E. Fittings:

1. Type:

a. Piping 2 Inches and Smaller: Threaded.

b. Piping 2-1/2 Inches and Larger: Welded or flanged.

2. Dimensions: Comply with ASME B36.10.

3. Flanged Connections: As indicated on Drawings.

4. Threaded Fittings:

a. Class: 150.

b. Malleable Iron:

1) Comply with ASTM A47 and ASME B16.3.

2) Type: Black; banded.

5. Rigid Steel Couplings: Comply with ASTM A865.

6. Butt-Welding Fittings:

a. Comply with ASTM A105, ASTM A858, and ASME B16.9.

b. Class: 150.

7. Socket-Welding Fittings:

a. Comply with ASTM A105, ASTM A858, and ASME B16.11.

b. Class: 150.

8. Flanged Fittings:

a. Forged Steel: Comply with ASTM A105, ASTM A727, AWWA C207, and ASME B16.5.

b. Class: 150.

c. Type: Welded.

d. Facing and Drilling:

1) Comply with ASME B16.5.

e. Backing Flanges:

1) Material: Cast steel.

2) Comply with ASTM A216/A216M.

3) Class: 150.

4) Type: Van stone.

5) Drilling: Comply with ASME B16.5.

f. Fasteners:

1) Bolts: Comply with ASTM A193/A193M; hex head.

2) Nuts: Comply with ASTM A194/A194M; hex head.

3) Cast-Iron Mating Flange on Valves or Equipment:

a) Bolts: Comply with ASTM A193/A193M, hex head.

b) Nuts: Comply with ASTM A194/A194M; hex head.

4) Washers: Constructed of same material as bolts.

9. Mechanical Couplings: Comply with AWWA C606.

10. Unions:

    a. Piping 2 Inches and Smaller: Threaded.

    b. Piping 2-1/2 Inches and Larger: Threaded or flanged.

2.2 STEEL TUBE AND FITTINGS

A. Tube:

1. Material: Carbon steel.

2. Comply with ASTM A334.

3. Type: Seamless.

B. Fittings:

1. Material: Steel.

2. Comply with ASTM A108 or A576.

3. Type: Compression.

4. Pressure Rating: As indicated on Drawings.

5. Threads:

    a. Comply with ASME B1.1.

    b. Type: Straight.

2.3 BURIED STEEL PIPE EXTERIOR LINING

A. Fusion-bonded epoxy coating.

B. Comply with AWWA C213.

2.4 CEMENT-MORTAR-LINED STEEL PIPE AND FITTINGS

A. Comply with AWWA C205.

B. Shop-apply lining after fabrication and before installation.

C. Cement: Comply with ASTM C150/C150M.

D. Aggregate:

1. Material: Silica sand.

2. Comply with ASTM C33/C33M.

E. Water: Clean with no organic matter or strong alkalis.

F. Liner Thickness: Comply with AWWA C205.

2.5 PLASTIC-LINED STEEL PIPE AND FITTINGS – NOT USED

2.6 GLASS-LINED STEEL PIPE AND FITTINGS – NOT USED

2.7 RUBBER-LINED STEEL PIPE AND FITTINGS – NOT USED

2.8 INTERNALLY COATED STEEL PIPE AND FITTINGS – NOT USED

2.9 FINISHES

A. Coat machined faces of flanges with temporary rust-inhibitive coating.

B. Prepare piping for field finishes as specified in Section 09 90 00 - Painting and Coating.

2.10 ACCESSORIES

A. Pipe-Thread Tape:

1. Material: PTFE.

2. Comply with ASTM D3308.

B. Flange Gaskets:

1. Comply with AWWA C207.

2. Nonmetallic Gaskets:

a. Material: EPDM.

b. Comply with ASME B16.21.

3. Metallic Ring Joint Gaskets:

a. Material: Steel.

b. Comply with ASME B16.20.

4. Type:

a. Raised Face: Flat ring.

b. Flat Face: Full face.

2.11 SOURCE QUALITY CONTROL

A. Section 01 45 00 - Quality Control: Requirements for testing, inspection, and analysis.

B. Testing:

1. Provide shop inspection and testing of completed pipe sections.

2. Conduct 15,000-V minimum electrostatic spark test on each plastic-lined pipe to ensure integrity of plastic liner.

3. Test thermal shock resistance of glass-lined pipe according to ASTM C600.

C. Owner Inspection:

1. Make completed pipe sections available for inspection at Manufacturer's factory prior to packaging for shipment.

2. Notify COMPANY at least seven days before inspection is allowed.

D. Owner Witnessing:

1. Allow witnessing of factory inspections and test at Manufacturer's test facility.

2. Notify COMPANY at least seven days before inspections and tests are scheduled.

E. Certificate of Compliance:

1. If Manufacturer is approved by authorities having jurisdiction, submit certificate of compliance indicating Work performed at Manufacturer's facility conforms to Contract Documents.

2. Specified shop tests are not required for Work performed by approved manufacturer.

PART 3 EXECUTION

3.1 EXAMINATION

A. Section 01 70 00 - Execution and Closeout Requirements: Requirements for installation examination.

B. Verify that field dimensions are as indicated on Drawings.

C. Inspect existing flanges for nonstandard bolt-hole configurations or design and verify that new pipe and flange mate properly.

3.2 PREPARATION

A. Section 01 70 00 - Execution and Closeout Requirements: Requirements for installation preparation.

B. Ream ends of threaded pipes and file smooth.

C. Thoroughly clean pipe and fittings before installation.

D. Surface Preparation:

1. Touch up shop-primed surfaces with primer as specified in Section 09 90 00 - Painting and Coating.

2. Solvent-clean surfaces that are not shop primed.

3. Clean surfaces to remove loose rust, mill scale, and other foreign substances by commercial sand blasting; SSPC-SP 6.

4. Prime surfaces as specified in Section 09 90 00 - Painting and Coating.

3.3 INSTALLATION

A. According to AWWA M11.

B. Run piping straight along alignment as indicated on Drawings, with minimum number of joints.

C. Fittings:

1. Clean gasket seats thoroughly and wipe gaskets clean prior to installation.

2. Install fittings according to Manufacturer instructions.

3. Bolts:

a. Tighten bolts progressively, drawing up bolts on opposite sides until bolts are uniformly tight.

b. Use torque wrench to tighten bolts to Manufacturer instructions.

D. Install cement-lined fabricated fittings with flexible pipe couplings.

E. Welding of Cement-Lined Steel Pipe: Permitted only with approval of Engineer.

F. Provide required upstream and downstream clearances from devices as indicated on Drawings.

G. Install piping with sufficient slopes for venting or draining liquids and condensate to low points.

H. Provide expansion joints as specified in Section 40 05 06 - Couplings, Adapters, and Specials for Process Piping to compensate for pipe expansion due to temperature differences.

I. Disinfection: Disinfect potable-water piping as specified in Section 33 13 00 – Testing and Disinfection of Water Utility Piping.

J. Dielectric Fittings: Provide between dissimilar metals.

K. Field Cuts: According to Manufacturer instructions.

L. Finish primed surfaces as specified in Section 09 90 00 - Painting and Coating.

M. Installation Standards: Install Work according to COMPANY standards.

3.4 TOLERANCES

A. Section 01 40 00 - Quality Requirements: Requirements for tolerances.

B. Install pipe within tolerance of 5/8 inch.

3.5 FIELD QUALITY CONTROL

A. Section 01 70 00 - Execution and Closeout Requirements: Requirements for testing, adjusting, and balancing.

B. Inspection:

1. Inspect for damage to pipe lining or coating and for other defects that may be detrimental as determined by Architect/Engineer.

2. Repair damaged piping or provide new, undamaged pipe.

3. After installation, inspect for proper supports and interferences.

C. Pressure Testing:

1. Test Pressure: Not less than 200 psig or 50 psi in excess of maximum static pressure, whichever is greater.

2. Conduct hydrostatic test for minimum two hours.

3. Filling:

a. Slowly fill with water section to be tested and expel air from piping at high points.

b. Install corporation cocks at high points.

c. Close air vents and corporation cocks after air is expelled.

d. Raise pressure to specified test pressure.

4. Observe joints, fittings, and valves under test.

5. Remove and renew cracked pipe, joints, fittings, and valves showing visible leakage and retest.

6. Leakage:

a. Correct visible deficiencies and continue testing at same test pressure for additional two hours to determine leakage rate.

b. Maintain pressure within plus or minus 5 psi of test pressure.

c. Leakage is defined as quantity of water supplied to piping necessary to maintain test pressure during period of test.

d. Compute maximum allowable leakage by following formula:

1) L = SD x sqrt(P)/C.

2) L = testing allowance in gph.

3) S = length of pipe tested in feet.

4) D = nominal diameter of pipe in inches.

5) P = average test pressure during hydrostatic test in psig.

6) C = 148,000.

7) When pipe under test contains sections of various diameters, calculate allowable leakage from sum of computed leakage for each size.

e. If test of pipe indicates leakage greater than allowed, locate source of leakage, make corrections, and retest until leakage is within allowable limits.

f. Correct visible leaks regardless of quantity of leakage.

D. Pressure Testing: According to COMPANY standards.

E. Replace pipe or fittings with mortar cracks wider than 1/16 inch.

3.6 CLEANING

A. Section 01 70 00 - Execution and Closeout Requirements: Requirements for cleaning.

B. Keep pipe interior clean as installation progresses.

C. After installation, clean pipe interior of soil, grit, loose mortar, and other debris.

END OF SECTION

SECTION 40 05 13.53 - DUCTILE IRON PROCESS PIPING

PART 1 GENERAL

1.1 SUMMARY

A. Section Includes:

1. Ductile-iron pipe.
2. Ductile-iron, malleable-iron, and cast-iron fittings.
3. Accessories.

1.2 REFERENCE STANDARDS

A. American Water Works Association:

1. AWWA C104 - Cement-Mortar Lining for Ductile-Iron Pipe and Fittings.
2. AWWA C105 - Polyethylene Encasement for Ductile-Iron Pipe Systems.
3. AWWA C110 - Ductile-Iron and Gray-Iron Fittings.
4. AWWA C111 - Rubber-Gasket Joints for Ductile-Iron Pressure Pipe and Fittings.
5. AWWA C115 - Flanged Ductile-Iron Pipe with Ductile-Iron or Gray-Iron Threaded Flanges.
6. AWWA C150 - Thickness Design of Ductile-Iron Pipe.
7. AWWA C151 - Ductile-Iron Pipe, Centrifugally Cast.
8. AWWA C153 - Ductile-Iron Compact Fittings.

B. ASME International:

1. ASME B16.1 - Gray Iron Pipe Flanges and Flanged Fittings: Classes 25, 125, and 250.
2. ASME B31.3 - Process Piping.

C. ASTM International:

1. ASTM A48/A48M - Standard Specification for Gray Iron Castings.

D. NSF International:

1. NSF 61 - Drinking Water System Components - Health Effects.
2. NSF 372 - Drinking Water System Components - Lead Content.

E. Society for Protective Coatings:

1. SSPC SP 6 - Commercial Blast Cleaning.

1.3 COORDINATION

A. Coordinate Work of this Section with piping and equipment connections specified in other Sections and indicated on Drawings.

1.4 PREINSTALLATION MEETINGS

A. Convene minimum one week prior to commencing Work of this Section.

1.5 SUBMITTALS

A. Section 01 33 00 - Submittal Procedures: Requirements for submittals.

B. Product Data: Submit Manufacturer information regarding pipe and fittings.

C. Shop Drawings: Indicate layout of piping systems, including equipment, critical dimensions, sizes, and materials lists.

D. Manufacturer's Certificate: Certify that products meet or exceed specified requirements.

E. Source Quality-Control Submittals: Indicate results of shop tests and inspections.

F. Field Quality-Control Submittals: Indicate results of Contractor-furnished tests and inspections.

G. Qualifications Statements:

1. Submit qualifications for Manufacturer, installer, and licensed professional.

2. Submit Manufacturer's approval of installer.

1.6 CLOSEOUT SUBMITTALS

A. Section 01 70 00 - Execution and Closeout Requirements: Requirements for submittals.

B. Project Record Documents: Record actual locations of piping, valves and other appurtenances, connections, and invert or centerline elevations for gravity or pressurized pipe, respectively.

C. Identify and describe unexpected variations to subsoil conditions or discovery of uncharted utilities.

1.7 QUALITY ASSURANCE

A. Permanently mark each length of pipe with Manufacturer's name or trademark and indicate conformance to standards.

B. Materials in Contact with Potable Water: Certified according to NSF 61 and NSF 372.

C. Perform Work according to COMPANY standards.

1.8 QUALIFICATIONS

A. Manufacturer: Company specializing in manufacturing products specified in this Section with minimum three years' documented experience.

B. Installer: Company specializing in performing Work of this Section with minimum three years' documented experience and approved by Manufacturer.

C. Licensed Professional: Professional engineer experienced in design of specified Work and licensed in State of Arizona.

1.9 DELIVERY, STORAGE, AND HANDLING

A. Inspection: Accept materials on Site in Manufacturer's original packaging and inspect for damage.

B. Store materials according to Manufacturer instructions.

C. Protection:

1. Protect materials from moisture and dust by storing in clean, dry location remote from construction operations areas.

2. Protect piping and appurtenances by storing off ground.

3. Provide additional protection according to Manufacturer instructions.

1.10 EXISTING CONDITIONS

A. Field Measurements:

1. Verify field measurements prior to fabrication.

2. Indicate field measurements on Shop Drawings.

PART 2 PRODUCTS

2.1 DUCTILE IRON PIPE AND FITTINGS

A. Piping:

1. Comply with AWWA C115 and C150.

2. Class: As indicated on Drawings.

B. Fittings:

1. Material: AWWA C110 or AWWA C153.

2. Class: Same as that of connected piping.

3. Mechanical Joints:

a. Comply with AWWA C110 and AWWA C111.

b. Glands: Ductile iron with zinc coating.

c. Push-on Joints: Comply with AWWA C111.

4. Restrained Joints: Comply with AWWA C111.

5. Flanged Fittings: Comply with AWWA C110.

C. Cement-Mortar Lining:

1. Comply with AWWA C104.

2. Thickness: Standard.

D. Outside Coating:

1. Buried Service:

a. Type: Asphaltic.

b. Thickness: 0.04 inch.

2. Exposed Service: As specified in Section 09 90 00 - Painting and Coating.

2.2 ACCESSORIES

A. Jackets:

1. Description:

a. Material: Polyethylene.

b. Comply with AWWA C105.

B. Gaskets: EPDM.

2.3 SOURCE QUALITY CONTROL

A. Section 01 40 00 - Quality Requirements: Requirements for testing, inspection, and analysis.

B. Provide shop inspection and testing of completed assembly.

C. Owner Inspection:

1. Make completed piping components available for inspection at Manufacturer's factory prior to packaging for shipment.

2. Notify COMPANY at least seven days before inspection is allowed.

D. Owner Witnessing:

1. Allow witnessing of factory inspections and test at Manufacturer's test facility.

2. Notify COMPANY at least seven days before inspections and tests are scheduled.

E. Certificate of Compliance:

1. If Manufacturer is approved by authorities having jurisdiction, submit certificate of compliance indicating Work performed at Manufacturer's facility conforms to Contract Documents.

2. Specified shop tests are not required for Work performed by approved manufacturer.

PART 3 EXECUTION

3.1 EXAMINATION

A. Section 01 70 00 - Execution and Closeout Requirements: Requirements for installation examination.

B. Verify that field dimensions are as indicated on Drawings.

C. Inspect existing flanges for nonstandard bolt hole configurations or design and verify that new pipe and flange mate properly.

3.2 PREPARATION

A. Section 01 70 00 - Execution and Closeout Requirements: Requirements for installation preparation.

B. Thoroughly clean pipe and fittings before installation.

C. Surface Preparation:

1. Clean surfaces to remove loose rust, mill scale, and other foreign substances by commercial sand blasting; SSPC SP 6.

2. Touch up shop-primed surfaces with primer as specified in Section 09 90 00 - Painting and Coating.

3. Solvent-clean surfaces that are not shop primed.

3.3 INSTALLATION

A. Exposed Service Piping:

1. According to ASME B31.3.

2. Run piping straight along alignment as indicated on Drawings, with minimum number of joints.

B. Fittings:

1. According to Manufacturer instructions.

2. Clean gasket seats thoroughly, and wipe gaskets clean prior to installation.

3. Tighten bolts progressively, drawing up bolts on opposite sides until bolts are uniformly tight; use torque wrench to tighten bolts to Manufacturer instructions.

4. Provide required upstream and downstream clearances from devices as indicated on Drawings.

C. Make taps to ductile iron piping only with service saddle, tapping boss of a fitting or valve body, or equipment casting.

D. Install piping with sufficient slopes for venting or draining liquids and condensate to low points.

E. Provide expansion joints as specified in Section 40 05 06 - Couplings, Adapters, and Specials for Process Piping to compensate for pipe expansion due to temperature differences.

F. Disinfection: Disinfect potable water piping as specified in Section 33 13 00 – Testing and Disinfection of Water Utility Piping.

G. Dielectric Fittings: Provide between dissimilar metals.

H. Field Cuts: According to Pipe Manufacturer instructions.

I. Finish primed surfaces according to Section 09 90 00 - Painting and Coating.

J. Installation Standards: Install Work according to COMPANY standards.

3.4 TOLERANCES – NOT USED

3.5 FIELD QUALITY CONTROL

A. Section 01 70 00 - Execution and Closeout Requirements: Requirements for testing, adjusting, and balancing.

B. Inspection:

1. Inspect for damage to pipe lining or coating and for other defects that may be detrimental as determined by Architect/Engineer.

2. Repair damaged piping or provide new, undamaged pipe.

3. After installation, inspect for proper supports and interferences.

C. Pressure Testing:

1. Test Pressure: Not less than 200 psig or 50 psi in excess of maximum static pressure, whichever is greater.

2. Conduct hydrostatic test for minimum two hours.

3. Filling:

a. Fill section to be tested with water slowly and expel air from piping at high points.

b. Install corporation cocks at high points.

c. Close air vents and corporation cocks after air is expelled.

d. Raise pressure to specified test pressure.

4. Observe joints, fittings, and valves under test.

5. Remove and renew cracked pipe, joints, fittings, and valves showing visible leakage and retest.

6. Leakage:

    a. Correct visible deficiencies and continue testing at same test pressure for additional two hours to determine leakage rate.

    b. Maintain pressure within plus or minus 5 psi of test pressure.

    c. Leakage is defined as quantity of water supplied to piping necessary to maintain test pressure during period of test.

    d. Compute maximum allowable leakage by following formula:

        1) L = SD x sqrt(P)/C.

        2) L = testing allowance in gph.

        3) S = length of pipe tested in feet.

        4) D = nominal diameter of pipe in inches.

        5) P = average test pressure during hydrostatic test in psig.

        6) C = 148,000.

        7) If pipe under test contains sections of various diameters, calculate allowable leakage from sum of computed leakage for each size.

    e. If test of pipe indicates leakage greater than allowed, locate source of leakage, make corrections, and retest until leakage is within allowable limits.

    f. Correct visible leaks regardless of quantity of leakage.

3.6 CLEANING

A. Section 01 70 00 - Execution and Closeout Requirements specifies requirements for cleaning.

B. Keep pipe interior clean as installation progresses.

C. After installation, clean pipe interior of soil, grit, and other debris.

END OF SECTION

SECTION 40 05 13.73 - THERMOPLASTIC PROCESS PIPING

PART 1 GENERAL

1.1 SUMMARY

A. Section Includes:

1. PVC pipe.
2. PVC tube.
3. CPVC pipe.
4. Polyvinylidene fluoride (PVDF) pipe and tube.
5. Acrylonitrile-butadiene-styrene (ABS) pipe.
6. Polyethylene (PE) pipe and tube.
7. Fittings.
8. Accessories for plastic piping.

1.2 REFERENCE STANDARDS

A. American Water Works Association:

1. AWWA C111 - Rubber-Gasket Joints for Ductile-Iron Pressure Pipe and Fittings.
2. AWWA C900 - Polyvinyl Chloride (PVC) Pressure Pipe and Fabricated Fittings, 4 In. through 12 In., for Water Transmission and Distribution.
3. AWWA C901 - Polyethylene (PE) Pressure Pipe and Tubing, 1/2 In. (13 mm) through 3 In. (76 mm), for Water Service.
4. AWWA C906 - Polyethylene (PE) Pressure Pipe and Fittings, 4 In. (100 mm) through 63 In. (1,600 mm), for Water Distribution and Transmission.

B. ASME International:

1. ASME B1.1 - Unified Inch Screw Threads (UN and UNR Thread Form).
2. ASME B1.20.1 - Pipe Threads, General Purpose (Inch).
3. ASME B16.1 - Cast Iron Pipe Flanges and Flanged Fittings, Classes 25, 125, 250 and 800.
4. ASME B16.5 - Pipe Flanges and Flanged Fittings: NPS 1/2 through NPS 24 Metric/Inch Standard.
5. ASME B16.20 - Metallic Gaskets for Pipe Flanges: Ring-Joint, Spiral-Wound, and Jacketed.
6. ASME B16.21 - Nonmetallic Flat Gaskets for Pipe Flanges.

7. ASME B31.3 - Process Piping.

C. ASTM International:

1. ASTM A193/A193M - Standard Specification for Alloy-Steel and Stainless Steel Bolting for High Temperature or High Pressure Service and Other Special Purpose Applications.

2. ASTM A194/A194M -Standard Specification for Carbon Steel, Alloy Steel, and Stainless Steel Nuts for Bolts for High Pressure or High Temperature Service, or Both.

3. ASTM D1527 - Standard Specification for Acrylonitrile-Butadiene-Styrene (ABS) Plastic Pipe, Schedules 40 and 80.

4. ASTM D1784 - Standard Specification for Rigid Poly(Vinyl Chloride) (PVC) Compounds and Chlorinated Poly(Vinyl Chloride) (CPVC) Compounds.

5. ASTM D1785 - Standard Specification for Poly(Vinyl Chloride) (PVC) Plastic Pipe, Schedules 40, 80, and 120.

6. ASTM D2235 - Standard Specification for Solvent Cement for Acrylonitrile-Butadiene-Styrene (ABS) Plastic Pipe and Fittings.

7. ASTM D2241 - Standard Specification for Poly(Vinyl Chloride) (PVC) Pressure-Rated Pipe (SDR Series).

8. ASTM D2447 - Standard Specification for Polyethylene (PE) Plastic Pipe, Schedules 40 and 80, Based on Outside Diameter.

9. ASTM D2464 - Standard Specification for Threaded Poly(Vinyl Chloride) (PVC) Plastic Pipe Fittings, Schedule 80.

10. ASTM D2466 - Standard Specification for Poly(Vinyl Chloride) (PVC) Plastic Pipe Fittings, Schedule 40.

11. ASTM D2467 - Standard Specification for Poly(Vinyl Chloride) (PVC) Plastic Pipe Fittings, Schedule 80.

12. ASTM D2564 - Standard Specification for Solvent Cements for Poly(Vinyl Chloride) (PVC) Plastic Piping Systems.

13. ASTM D2609 - Standard Specification for Plastic Insert Fittings for Polyethylene (PE) Plastic Pipe.

14. ASTM D2657 - Standard Practice for Heat Fusion Joining of Polyolefin Pipe and Fittings.

15. ASTM D2661 - Standard Specification for Acrylonitrile-Butadiene-Styrene (ABS) Schedule 40 Plastic Drain, Waste, and Vent Pipe and Fittings.

16. ASTM D2683 - Standard Specification for Socket-Type Polyethylene Fittings for Outside Diameter-Controlled Polyethylene Pipe and Tubing.

17. ASTM D2737 - Standard Specification for Polyethylene (PE) Plastic Tubing.

18. ASTM D2837 - Standard Test Method for Obtaining Hydrostatic Design Basis for Thermoplastic Pipe Materials or Pressure Design Basis for Thermoplastic Pipe Products.

19. ASTM D2855 - Standard Practice for Making Solvent-Cemented Joints with Poly(Vinyl Chloride) (PVC) Pipe and Fittings.

20. ASTM D3035 - Standard Specification for Polyethylene (PE) Plastic Pipe (DR-PR) Based on Controlled Outside Diameter.

21. ASTM D3139 - Standard Specification for Joints for Plastic Pressure Pipes Using Flexible Elastomeric Seals.

22. ASTM D3222 - Standard Specification for Unmodified Poly(Vinylidene Fluoride) (PVDF) Molding Extrusion and Coating Materials.

23. ASTM D3261 - Standard Specification for Butt Heat Fusion Polyethylene (PE) Plastic Fittings for Polyethylene (PE) Plastic Pipe and Tubing.

24. ASTM D3350 - Standard Specification for Polyethylene Plastics Pipe and Fittings Materials.

25. ASTM D3892 - Standard Practice for Packaging/Packing of Plastics.

26. ASTM D3965 - Standard Classification System and Basis for Specifications for Rigid Acrylonitrile-Butadiene-Styrene (ABS) Materials for Pipe and Fittings.

27. ASTM F402 - Standard Practice for Safe Handling of Solvent Cements, Primers, and Cleaners Used for Joining Thermoplastic Pipe and Fittings.

28. ASTM F437 - Standard Specification for Threaded Chlorinated Poly(Vinyl Chloride) (CPVC) Plastic Pipe Fittings, Schedule 80.

29. ASTMF438 - Standard Specification for Socket-Type Chlorinated Poly(Vinyl Chloride) (CPVC) Plastic Pipe Fittings, Schedule 40.

30. ASTM F439 - Standard Specification for Chlorinated Poly (Vinyl Chloride) (CPVC) Plastic Pipe Fittings, Schedule 80.

31. ASTM F441/F441M - Standard Specification for Chlorinated Poly(Vinyl Chloride) (CPVC) Plastic Pipe, Schedules 40 and 80.

32. ASTM F442/F442M - Standard Specification for Chlorinated Poly(Vinyl Chloride) (CPVC) Plastic Pipe (SDR-PR).

33. ASTM F477 - Standard Specification for Elastomeric Seals (Gaskets) for Joining Plastic Pipe.

34. ASTM F493 - Standard Specification for Solvent Cements for Chlorinated Poly(Vinyl Chloride) (CPVC) Plastic Pipe and Fittings.

35. ASTM F656 - Standard Specification for Primers for Use in Solvent Cement Joints of Poly(Vinyl Chloride) (PVC) Plastic Pipe and Fittings.

36. ASTM F714 - Standard Specification for Polyethylene (PE) Plastic Pipe (DR-PR) Based on Outside Diameter.

37. ASTM F876 - Standard Specification for Crosslinked Polyethylene (PEX) Tubing.

38. ASTM F1055 - Standard Specification for Electrofusion Type Polyethylene Fittings for Outside Diameter Controlled Polyethylene and Crosslinked Polyethylene (PEX) Pipe and Tubing.

39. ASTM F1056 - Standard Specification for Socket Fusion Tools for Use in Socket Fusion Joining Polyethylene Pipe or Tubing and Fittings.

40. ASTM F1290 - Standard Practice for Electrofusion Joining Polyolefin Pipe and Fittings.

D. NSF International:

1. NSF 61 - Drinking Water System Components - Health Effects.

1.3 COORDINATION

A. Coordinate Work of this Section with piping and equipment connections specified in other Sections and indicated on Drawings.

1.4 PREINSTALLATION MEETINGS

A. Convene minimum one week prior to commencing Work of this Section.

1.5 SUBMITTALS

A. Section 01 33 00 - Submittal Procedures: Requirements for submittals.

B. Product Data: Submit Manufacturer's catalog information regarding pipe and fittings.

C. Shop Drawings: Indicate layout of piping systems, including equipment, critical dimensions, sizes, and materials lists.

D. Manufacturer's Certificate: Certify that products meet or exceed specified requirements.

E. Source Quality-Control Submittals: Indicate results of shop tests and inspections.

F. Field Quality-Control Submittals: Indicate results of Contractor-furnished tests and inspections.

G. Qualifications Statements:

1. Submit qualifications for Manufacturer, installer, and licensed professional.

2. Submit Manufacturer's approval of installer.

1.6 SUSTAINABLE DESIGN SUBMITTALS – NOT USED

1.7 CLOSEOUT SUBMITTALS

A. Section 01 70 00 - Execution and Closeout Requirements: Requirements for submittals.

B. Project Record Documents: Record actual locations of piping, valves and other appurtenances, connections, and invert or centerline elevations for gravity or pressurized pipe, respectively.

C. Identify and describe unexpected variations to subsoil conditions or discovery of uncharted utilities.

1.8 QUALITY ASSURANCE

A. Permanently mark each length of pipe with Manufacturer's name or trademark and indicate conformance to standards.

B. Materials in Contact with Potable Water: Certified according to NSF 61.

C. Perform Work according to COMPANY standards.

1.9 QUALIFICATIONS

A. Manufacturer: Company specializing in manufacturing products specified in this Section with minimum three years' documented experience.

B. Installer: Company specializing in performing Work of this Section with minimum three years' documented experience and approved by Manufacturer.

C. Licensed Professional: Professional engineer experienced in design of specified Work and licensed in State of Arizona.

1.10 DELIVERY, STORAGE, AND HANDLING

A. Inspection:

1. Accept materials on Site in Manufacturer's original packaging and inspect for damage.

2. Manufacturer's Packaging: Comply with ASTM D3892.

B. Store materials according to Manufacturer instructions.

C. Protection:

1. Protect materials from puncture, abrasion, moisture, dust, and UV by storing in clean, dry location remote from construction operations areas.

2. Protect piping and appurtenances by storing off ground.

3. Provide additional protection according to Manufacturer instructions.

1.11 AMBIENT CONDITIONS

A. Section 01 50 00 - Temporary Facilities and Controls: Requirements for ambient condition control facilities for product storage and installation.

B. Minimum and Maximum Temperatures: Do not install pipe when temperature is below 40 degrees F or above 90 degrees F if pipe is exposed to direct sunlight.

C. UV Protection: Provide pipe installed above ground or outside with UV protection.

1.12 EXISTING CONDITIONS

A. Field Measurements:

1. Verify field measurements prior to fabrication.

2. Indicate field measurements on Shop Drawings.

PART 2 PRODUCTS

2.1 PVC PIPE, TUBE, AND FITTINGS

A. PVC Pipe and Fittings:

1. Pipe:

a. Comply with ASTM D1785.

b. Schedule: 40, or as indicated on Drawings.

2. Fittings: ASTM D2466, Schedule 40.

3. Joints: ASTM D2855, socket, solvent welded.

4. Materials:

a. Comply with ASTM D1784.

b. Minimum Cell Classification: 12545-C.

B. PVC Tube and Fittings:

1. Tube:

a. Type: Clear.

b. Size: As indicated on Drawings.

c. Pressure Rating: As indicated on Drawings.

2. Fittings:

a. Type: Compression.

b. Materials: Suitable for application.

3. Threads:

a. Type: Straight.

b. Comply with ASME B1.1.

2.2 CPVC PIPE AND FITTINGS

A. Description:

1. Pipe:

a. Comply with ASTM F441/F441M.

b. Schedule: 40, or as indicated on Drawings.

2. Fittings:

a. Flanged: Comply with ASME B16.5.

b. Socket Welded: Comply with ASTM F438, Schedule 40.

c. Threaded: Comply with ASTM F437 and ASME B1.20.1.

d. Schedule: 80.

3. Joints: Socket welded.

4. Materials:

a. Comply with ASTM D1784.

b. Cell Classification: 23447.

2.3 PVDF PIPE, TUBE, AND FITTINGS

A. Description:

1. Pipe:

a. Comply with ASTM D3222.

b. Schedule 40, or as indicated on Drawings.

2. Fittings:

a. Comply with ASTM D3222.

b. Type: Molded.

c. End Connections:

1) Socket welded.

B. PVDF Tube and Fittings:

1. Tube:

a. Size: As indicated on Drawings.

b. Pressure Rating: As indicated on Drawings.

2. Fittings:

a. Type: Compression.

b. Materials: Suitable for application.

2.4 ABS PIPE AND FITTINGS

A. Pipe:

1. Comply with ASTM D1527.

2. Schedule: 40, or as indicated on Drawings.

B. Fittings:

1. Comply with ASTM D2661.

2. Type: Molded.

3. End Connections:

a. Solvent welded.

C. Materials:

1. Comply with ASTM D3965.

2. Cell Classification: 42222.

2.5 PE PIPE, TUBE, AND FITTINGS

A. PE Pipe and Fittings:

1. Pipe: AWWA C901 or AWWA C906.

2. Fittings:

a. Comply with AWWA C901 or C906.

b. Type: Molded or fabricated.

3. Joints: Butt fusion.

4. Materials:

a. Comply with ASTM D3350.

b. Cell Classification: 324433-C.

B. PE Tube and Fittings:

1. Tube:

a. Comply with AWWA C901.

b. Size and Wall Thickness:

1) As indicated in Drawings.

2) Comply with ASTM D2737 for PE tubing, or F876 for PEX tubing.

c. Pressure Rating: As indicated on Drawings.

2. Fittings:

a. Type: Compression.

b. Materials: Suitable for application.

3. Threads:

a. Type: Straight.

b. Comply with ASME B1.1.

2.6 FINISHES

A. Coat machined faces of metallic flanges with temporary rust-inhibitive coating.

2.7 ACCESSORIES

A. PVC Piping:

1. Flange Bolting:

a. Hex-Head Bolts: Stainless steel; ASTM A193.

b. Hex-Head Nuts: Stainless steel; ASTM A194.

2. Flange Gaskets:

a. Type: Full faced.

b. Material: EPDM.

c. Comply with ASME B16.21.

3. Solvent Cement:

a. Comply with ASTM D2564.

b. Primers: Comply with ASTM F656.

B. CPVC Piping:

1. Flange Bolting:

a. Hex-Head Bolts: Stainless steel; ASTM A193.

b. Hex-Head Nuts: Stainless steel; ASTM A194.

2. Flange Gaskets:
    a. Type: Full faced.
    b. Material: EPDM.
    c. Comply with ASME B16.21.
3. Push-On Joint Seals:
    a. Material: EPDM.
    b. Comply with ASTM F477.
4. Solvent Cement: Comply with ASTM F493.

C. PVDF Piping:
1. Nonmetallic Gaskets:
    a. Material: EPDM.
    b. Comply with ASME B16.21.
2. Metallic Ring Joint Gaskets:
    a. Material: Steel.
    b. Comply with ASME B16.20.
3. Flange Bolting:
    a. Hex-Head Bolts: Stainless steel; ASTM A193/A193M.
    b. Hex-Head Nuts: Stainless steel; ASTM A194/A194M.
4. Flange Gaskets:
    a. Type: Full faced.
    b. Material: EPDM.
    c. Comply with ASME B16.21.

D. ABS Piping:
1. Flange Bolting:
    a. Hex-Head Bolts: Stainless steel; ASTM A193/A193M.
    b. Hex-Head Nuts: Stainless steel; ASTM A194/A194M.
2. Flange Gaskets:
    a. Type: Full faced.

b. Material: EPDM.

c. Comply with ASME B16.21.

3. Solvent Cement: Comply with ASTM D2235.

E. PE Piping:

1. Insert Fittings: Comply with ASTM D2609.

2. Couplings: Comply with ASTM F1055.

3. Flange Bolting:

a. Hex-Head Bolts: Stainless steel; ASTM A193.

b. Hex-Head Nuts: Stainless steel; ASTM A194.

4. Flange Gaskets:

a. Type: Full faced.

b. Material: EPDM.

c. Comply with ASME B16.21.

2.8 SOURCE QUALITY CONTROL

A. Section 01 45 00 - Quality Control: Requirements for testing, inspection, and analysis.

B. Provide shop inspection and testing of completed pipe sections.

C. Owner Inspection:

1. Make completed pipe sections available for inspection at Manufacturer's factory prior to packaging for shipment.

2. Notify Owner at least seven days before inspection is allowed.

D. Owner Witnessing:

1. Allow witnessing of factory inspections and test at Manufacturer's test facility.

2. Notify Owner at least seven days before inspections and tests are scheduled.

E. Certificate of Compliance:

1. If Manufacturer is approved by authorities having jurisdiction, submit certificate of compliance indicating Work performed at Manufacturer's facility conforms to Contract Documents.

2. Specified shop tests are not required for Work performed by approved manufacturer.

PART 3 EXECUTION

3.1 EXAMINATION

A. Section 01 70 00 - Execution and Closeout Requirements: Requirements for installation examination.

B. Verify that field dimensions are as indicated on Drawings.

C. Inspect existing flanges for nonstandard bolt hole configurations or design and verify that new pipe and flange mate properly.

3.2 PREPARATION

A. Section 01 70 00 - Execution and Closeout Requirements: Requirements for installation preparation.

B. Ream pipe and tube ends, remove burrs, and bevel plain-end pipe.

C. Thoroughly clean pipe and fittings before installation.

D. Cleaning: Clean surfaces to remove foreign substances.

3.3 INSTALLATION

A. Comply with ASME B31.3.

B. Run piping straight along alignment as indicated on Drawings, with minimum number of joints.

C. Fittings:

1. According to Manufacturer instructions.

2. Gaskets:

a. Clean seats thoroughly.

b. Wipe gaskets clean prior to installation.

3. Tighten bolts progressively, drawing up bolts on opposite sides until bolts are uniformly tight; use torque wrench to tighten bolts to Manufacturer instructions.

D. Provide required upstream and downstream clearances from devices as indicated.

E. Install piping with sufficient slopes for venting or drainage of liquids and condensate to low points.

F. Provide expansion joints as specified in Section 40 05 06 - Couplings, Adapters, and Specials for Process Piping to compensate for pipe expansion due to temperature differences.

G. Disinfection: Disinfect potable-water piping as specified in Section 33 13 00 – Testing and Disinfection of Water Utility Piping.

H. Field Cuts: According to Pipe Manufacturer instructions.

I. Joining:

1. Heat Joining: Comply with ASTM D2657.

2. Electrofusion: Comply with ASTM F1290.

3. Primers and Cleaners: Comply with ASTM F402.

4. PVC Solvent-Cemented Joints: Comply with ASTM D2855.

J. Insulation: As indicated on Drawings.

K. Installation Standards: Install Work according to COMPANY standards.

3.4 TOLERANCES – NOT USED

3.5 FIELD QUALITY CONTROL

A. Section 01 70 00 - Execution and Closeout Requirements: Requirements for testing, adjusting, and balancing.

B. Inspection:

1. Inspect for piping defects that may be detrimental as determined by the Architect/Engineer.

2. Repair damaged piping, or provide new, undamaged pipe.

3. After installation, inspect for proper supports and interferences.

C. Pressure Testing:

1. Test Pressure: Not less than 200 psig or 50 psi in excess of maximum static pressure, whichever is greater.

2. Conduct hydrostatic test for minimum two hours.

3. Filling:

a. Fill section to be tested with water slowly and expel air from piping at high points.

b. Install corporation cocks at high points.

c. Close air vents and corporation cocks after air is expelled.

d. Raise pressure to specified test pressure.

4. Observe joints, fittings, and valves under test.

5. Remove and renew cracked pipe, joints, fittings, and valves showing visible leakage and retest.

6. Leakage:

a. Correct visible deficiencies and continue testing at same test pressure for additional two hours to determine leakage rate.

b. Maintain pressure within plus or minus 5 psi of test pressure.

c. Leakage is defined as quantity of water supplied to piping necessary to maintain test pressure during period of test.

d. Compute maximum allowable leakage by following formula:

1) L = SD x sqrt(P)/C.

2) L = testing allowance in gph.

3) S = length of pipe tested in feet.

4) D = nominal diameter of pipe in inches.

5) P = average test pressure during hydrostatic test in psig.

6) C = 148,000.

7) When pipe under test contains sections of various diameters, calculate allowable leakage from sum of computed leakage for each size.

e. If test of pipe indicates leakage greater than allowed, locate source of leakage, make corrections, and retest until leakage is within allowable limits.

f. Correct visible leaks regardless of quantity of leakage.

3.6 CLEANING

A. Section 01 70 00 - Execution and Closeout Requirements: Requirements for cleaning.

B. Keep pipe interior clean as installation progresses.

C. Clean pipe interior of soil, grit, shavings, and other debris after pipe installation.

END OF SECTION

SECTION 40 05 51 – COMMON REQUIREMENTS RESULTS FOR PROCESS VALVES

PART 1 GENERAL

1.1 SUMMARY

A. This Section includes basic materials and methods related to valves commonly used for process systems, including pump stations, utility vaults, and water and wastewater treatment. This Section is to be used in conjunction with 40 05 51.12 Ball Valves, 40 05 51.15, Gate Valves, , 40 05 51.24 Check Valves, 40 05 67.36 Pressure Regulating Valves, and 40 05 78 Miscellaneous Valves.

B. Section Includes:

1. Valves.
2. Valve actuators.

1.2 REFERENCE STANDARDS

A. American Water Works Association (AWWA):

1. AWWA C504 - Rubber-Seated Butterfly Valves, 3 In. Through 72 In.
2. AWWA C509 - Resilient-Seated Gate Valves for Water Supply Service.
3. AWWA C541 - Hydraulic and Pneumatic Cylinder and Vane-Type Actuators for Valves and Slide Gates.
4. AWWA C542 - Electric Motor Actuators for Valves and Slide Gates.
5. AWWA C550 - Protective Interior Coatings for Valves and Hydrants.

B. ASTM International (ASTM):

1. ASTM B62 - Standard Specification for Composition Bronze or Ounce Metal Castings.
2. ASTM B584 - Standard Specification for Copper Alloy Sand Castings for General Applications.

C. Manufacturers Standardization Society of the Valve and Fittings Industry (MSS):

1. MSS SP-25 - Standard Marking System for Valves, Fittings, Flanges and Unions.

D. NSF International (NSF):

1. NSF 61 - Drinking Water System Components - Health Effects.
2. NSF 372 - Drinking Water System Components - Lead Content.

1.3 COORDINATION

A. Contractor shall be solely responsible to coordinate Work of this Section with piping, equipment, and appurtenances.

1.4 SUBMITTALS

A. Section 01 33 00 - Submittal Procedures: Requirements for submittals.

B. Product Data:

1. Submit Manufacturer's latest published literature. Include illustrations, installation and maintenance instructions, and parts lists.

2. Submit valve cavitation limits.

3. Submit Manufacturer data for actuator with model number and size indicated.

C. Shop Drawings:

1. Submit description of proposed installation, including associated wiring diagrams and electrical data as may be specified elsewhere in the contract documents.

2. Provide assembly drawings indicating parts list, materials, sizes, position indicators, limit switches, control system, actuator mounting, wiring diagrams, and control system schematics.

D. Manufacturer's Certificate: Certify that products meet or exceed specified requirements.

E. Manufacturer Instructions: Submit installation instructions and special requirements, including storage and handling procedures.

F. Lining and coating data.

G. Valve Labeling Schedule: Indicate valve locations and nametag text.

H. Certification of Valves Larger than 12 inches: Furnish certified copies of hydrostatic factory tests, indicating compliance with applicable standards.

I. Source Quality-Control Submittals: Indicate results of factory tests and inspections.

J. Field Quality-Control Submittals: Indicate results of Contractor-furnished tests and inspections, including factory-applied coatings.

1.5 CLOSEOUT SUBMITTALS

A. Project Record Documents: Record actual locations of valves and actuators.

B. Operation and Maintenance Data: Submit information for valves.

1.6 MAINTENANCE MATERIAL SUBMITTALS

A. Spare Parts:

1. Furnish one set of Manufacturer's recommended spare parts.

B. Tools:

1. Furnish special wrenches and other devices required for Owner to maintain equipment.

2. Furnish compatible and appropriately labeled toolbox when requested by Owner.

1.7 QUALITY ASSURANCE

A. Cast Manufacturer's name, pressure rating, size of valve, and year of fabrication into valve body.

B. Valve Testing: Each valve body shall be tested under a test pressure equal to twice its design water-working pressure.

C. Certification: Prior to shipment, submit for all valves over 12 inches in diameter, certified, notarized copies of the hydrostatic factory tests, showing compliance with the applicable standards of AWWA, ANSI, ASTM, etc. Valves tested and supplied shall be trackable and traceable by serial number, tagged or otherwise noted on valve, upon arrival to Site.

D. Maintain clearances as indicated on Drawings and Shop Drawings.

E. Unless otherwise noted, all water works materials provided for the Project shall be new, of first-class quality and shall be made by reputable manufacturers.

F. All material of a like kind shall be provided from a single manufacturer, unless otherwise approved by the Engineer.

1.8 DELIVERY, STORAGE, AND HANDLING

A. Inspection: Accept materials on Site in Manufacturer's original packaging and inspect for damage.

B. Store materials according to Manufacturer instructions.

1. Store materials in areas protected from weather, moisture, or other potential damage.

2. Do not store materials directly on ground.

C. Protection:

1. Protect materials from moisture and dust by storing in clean, dry location remote from construction operations areas.

2. Protect valve ends from entry of foreign materials by providing temporary covers and plugs.

3. Provide additional protection according to Manufacturer instructions.

D. Handle products carefully to prevent damage to interior or exterior surfaces.

E. All defective or damaged materials shall be replaced with new materials at no cost to the Owner.

1.9 EXISTING CONDITIONS

A. Field Measurements:

1. Verify field measurements prior to fabrication.

2. Indicate field measurements on Shop Drawings.

PART 2 PRODUCTS

2.1 GENERAL

A. All materials in contact with potable water shall conform to ANSI/NSF Standard 61 and meet the "lead free" requirements of the Safe Drinking Water Act amendment, effective January 4, 2014, as per the lead content evaluation procedures outlined in NSF/ANSI Standard 372.1.

1. All fittings shall either be cast or permanently stamped with markings identifying the item as complying with NSF 61 per the requirements of NSF 372 for "lead free".

2. All brass in contact with potable water shall comply with ASTM B584.

2.2 VALVES

A. Description: Valves, operator, actuator, handwheel, chainwheel, extension stem, floor stand, worm and gear operator, operating nut, chain, wrench, and other accessories as required and shown in the Drawings.

B. Operation:

1. Open by turning counterclockwise; close by turning clockwise.

2. Cast directional arrow on valve or actuator with OPEN and CLOSE cast on valve in appropriate location.

C. Valve Construction:

1. Bodies: Rated for maximum temperature and pressure to which valve will be subjected as specified in valve Sections.

D. Connecting Nuts and Bolts: Stainless steel.

2.3 RESILIANT-SEATED GATE VALVES

A. As specified in Section 40 05 51.15, Gate Valves.

2.4 RUBBER-SEATED BUTTERFLY VALVES – NOT USED

2.5 VALVE ACTUATORS

A. All valves shall be furnished with manual actuators, unless otherwise indicated in the Drawings.

B. Valves in sizes up to and including 4 inches in diameter shall have direct acting lever or handwheel actuators of the Manufacturer's best standard design.

C. Actuators shall be sized for the valve design pressure in accordance with AWWA C504.

D. Provide actuators with position indicators for shutoff valves 6 inches and larger.

E. Comply with AWWA C541 and C542, where applicable.

F. Furnish gear operators for valves 8 inches and larger, and chainwheel operators for valves mounted over 7 feet above floor.

G. Provide gear and power actuators with position indicators.

H. Gear-Assisted Manual Actuators:

1. Provide totally enclosed gears.

2. Maximum Operating Force: 60-pound-force (lbf).

3. Bearings: Permanently lubricated bronze.

4. Packing: Accessible for adjustment without requiring removal of actuator from valve.

I. Handwheel:

1. Furnish permanently attached handwheel for emergency manual operation.

2. Rotation: None during powered operation.

3. Permanently affix directional arrow and cast OPEN or CLOSE on handwheel to indicate appropriate direction to turn handwheel.

4. Maximum Operating Force: 60 lbf.

J. Pneumatic Actuators:

1. Furnish isolating valves, filter regulators, pressure gauges, and condensate drains.

K. Electric Motor Actuators:

1. As specified in Division 26.

2. Motors: As specified in Section 40 05 13 - Common Work Results for Process Piping.

3. Control Panel:

a. Factory mounted.

b. NEMA 250.

c. Single-point power connection and grounding lug.

4. Controls: As specified in Division 27 05 50 Control Descriptions.

5. Disconnect Switch: Factory mounted in control panel.

6. Operation Sequences: As specified in Division 27 05 50 Control Descriptions.

7. Gearing:

    a. Single- or double-reduction unit.

    b. Spur or helical gears and worm gearing.

    c. Lubrication: Grease or oil in sealed housing.

2.6 SOURCE QUALITY CONTROL

A. Testing: Test valves according to Manufacturer's standard testing protocol, including hydrostatic, seal, and performance testing.

PART 3 EXECUTION

3.1 EXAMINATION

A. Verify that piping system is ready for valve installation.

3.2 PREPARATION

A. Access: All valves shall be installed to provide easy access for operation, removal, and maintenance and to avoid conflicts between valve operators and structural members or handrails.

B. Valve Accessories: Where combinations of valves, sensors, switches, and controls are specified, it shall be the responsibility of the Contractor to properly assemble and install these various items so that all systems are compatible and operating properly. The relationship between interrelated items shall be clearly noted on shop drawing submittals.

3.3 INSTALLATION

A. Install valves, actuators, extensions, and accessories according to Manufacturer instructions.

B. Firmly support valves to avoid undue stresses on piping.

C. Coat studs, bolts, and nuts with anti-seizing lubricant.

D. Clean field welds of slag and splatter to provide a smooth surface.

E. Install valves with stems upright or horizontal, not inverted.

F. Install valves with clearance for installation of insulation and allowing access.

G. Provide access where valves and fittings are not accessible.

H. Comply with Division 40 - Process Interconnections for piping materials applying to various system types.

I. Valve Applications:

1. Install shutoff and drain valves at locations as indicated on Drawings and as specified in this Section.

2. Install shutoff and isolation valves.

3. Isolate equipment, part of systems, or vertical risers as indicated on Drawings.

4. Install valves for throttling, bypass, or manual flow control services as indicated on Drawings.

J. Disinfection of Water Piping System:

1. Flush and disinfect system as specified in Section 33 13 00, Testing and Disinfection of Water Utility Piping.

3.4 FIELD QUALITY CONTROL

A. Valve Field Testing:

1. Test for proper alignment.

2. If specified by valve Section, field test equipment to demonstrate operation without undue leakage, noise, vibration, or overheating.

3. Engineer will witness field testing.

3.5 ATTACHMENTS – NOT USED

SECTION 40 05 51.12 - BALL VALVES

PART 1 GENERAL

1.1 SUMMARY

A. Section Includes:

1. Rubber-seated ball valves.
2. Plastic ball valves.

1.2 REFERENCE STANDARDS

A. American Water Works Association:

1. AWWA C507 - Ball Valves, 6 In. Through 60 In. (150 mm Through 1,500 mm).

B. ASME International:

1. ASME B16.1 - Gray Iron Pipe Flanges and Flanged Fittings: Classes 25, 125, and 250.
2. ASME B16.5 - Pipe Flanges and Flanged Fittings: NPS 1/2 through NPS 24 Metric/Inch Standard.
3. ASME B16.11 - Forged Fittings, Socket-Welding and Threaded.
4. ASME B16.42 - Ductile Iron Pipe Flanges and Flanged Fittings: Classes 150 and 300.
5. ASME B1.20.1 - Pipe Threads, General Purpose, Inch.

C. ASTM International:

1. ASTM D1784 - Standard Specification for Rigid Poly(Vinyl Chloride) (PVC) Compounds and Chlorinated Poly(Vinyl Chloride) (CPVC) Compounds.
2. ASTM D3222 - Standard Specification for Unmodified Poly(Vinylidene Fluoride) (PVDF) Molding Extrusion and Coating Materials.
3. ASTM D4101 - Standard Specification for Propylene Injection and Extrusion Materials.

D. Manufacturers Standardization Society of the Valve and Fittings Industry:

1. MSS SP-110 - Ball Valves Threaded, Socket-Welding, Solder Joint, Grooved and Flared Ends.

E. As specified in Section 40 05 51 - Common Requirements Results for Process Valves: Submittal requirements for compliance with this Section.

1.3 SUBMITTALS

A. Section 01 33 00 - Submittal Procedures: Requirements for submittals.

B. As required by Section 40 05 51, Common Requirements Results for Process Valves.

PART 2 PRODUCTS

2.1 RUBBER SEATED BALL VALVES

A. 4 Inches through 48 Inches

1. AWWA C507, Class 150.
2. Minimum Working Pressure: 20 psi.
3. Maximum Process Fluid Temperature: 104 deg. F.
4. Body:
   a. Material: Ductile iron, ASTM A536.
   b. Seats: EPDM.
5. Ball:
   a. Material: Ductile iron, ASTM A536.
   b. Surfacing: Stainless steel.
6. Bearing Seal, O-Rings, and Packing: EPDM.
7. Shaft and Attachment Pins: Type 316 stainless steel.
8. Bearings: PTFE-lined with fiberglass backing.
9. Shaft Seals: Self-lubricating and self-adjusting.
10. Connecting Hardware: Type 316 stainless steel.
11. End Connections:
    a. Threaded: Comply with ASTM B1.20.1.
12. Operator: Hand lever.
13. Manufacturers:
    a. Val-Matic
    b. Substitutions: As approved by Engineer.

B. Smaller Than 4 Inches:

1. Comply with MSS SP 110.
2. Minimum Working Pressure: 100 psig.
3. Maximum Process Fluid Temperature: 120 deg. F.
4. Body:

a. Type: Two piece.

b. Material: Bronze.

5. Ball: Stainless steel.

6. Port: Full.

7. Seats: EPDM.

8. Stem: Blowout proof.

9. End Connections: Threaded.

10. Operator: Hand lever.

11. Finishes: As specified in Section 40 05 51 - Common Requirements Results for Process Valves.

12. Manufacturers:

a. Apollo.

b. Substitutions: As approved by Engineer.

2.2 PLASTIC BALL VALVES

A. Manufacturers:

1. IPEX.

2. Substitutions: As approved by the Engineer.

B. Description:

1. Minimum Working Pressure: 100 psig.

2. Maximum Process Fluid Temperature: 120 deg. F.

3. Ports: Full size.

4. End Connections:

a. Union.

5. Ball valves for use in chemical supply shall be vented when used with Sodium hypochlorite (NaOCl).

C. Operator: Hand lever.

D. Materials:

1. Body and Ball: PVC, ASTM D1784; CPVC, ASTM D1784.

2. Seats: PTFE.

3. Confirm chemical compatibility for ball valves used in chemical supply. Propose alternate for Engineer's review if above materials are not compatible.

2.3 SOURCE QUALITY CONTROL

A. Section 01 40 00 - Quality Requirements: Requirements for testing, inspection, and analysis.

B. As specified in Section 40 05 51 - Common Requirements Results for Process Valves.

C. Testing: Test ball valves according to AWWA C507.

PART 3 EXECUTION

3.1 EXAMINATION

A. As specified in Section 40 05 51 - Common Requirements Results for Process Valves: Submittal requirements for compliance with this Section.

3.2 PREPARATION

A. As specified in Section 40 05 51 - Common Requirements Results for Process Valves: Submittal requirements for compliance with this Section.

3.3 INSTALLATION

A. According to AWWA C507.

B. As specified in Section 40 05 51 - Common Requirements Results for Process Valves: Submittal requirements for compliance with this Section.

3.4 FIELD QUALITY CONTROL

A. As specified in Section 40 05 51 - Common Requirements Results for Process Valves: Submittal requirements for compliance with this Section.

END OF SECTION

SECTION 40 05 51.15 - GATE VALVES

PART 1 GENERAL

1.1 SUMMARY

A. This Section includes gate valves for use in buried service and water treatment plants. Coordinate with Section 40 05 51, Common Requirements Results for Process Valves.

B. Section Includes:

1. Resilient-seated gate valves.

2. General duty gate valves smaller than 3 inches.

1.2 REFERENCE STANDARDS

A. American Society of Mechanical Engineers (ASME):

1. ASME B16.1 - Gray Iron Pipe Flanges and Flanged Fittings.

2. ASME B16.5 - Pipe Flanges and Flanged Fittings: NPS 1/2 through 24 - Metric/Inch Standard.

3. ASME B16.42 - Ductile Iron Pipe Flanges and Flanged Fittings: Classes 150 and 300.

4. ASME B1.20.1 - Pipe Threads, General Purpose (Inch).

B. ASTM International (ASTM):

1. ASTM A126 - Standard Specification for Gray Iron Castings for Valves, Flanges, and Pipe Fittings.

2. ASTM B62 - Standard Specification for Composition Bronze or Ounce Metal Castings.

3. ASTM B584 - Standard Specification for Copper Alloy Sand Castings for General Applications.

C. American Water Works Association (AWWA):

1. AWWA C509 - Resilient-Seated Gate Valves for Water Supply Service.

2. AWWA C515 – Reduced-Wall, Resilient-Seated Gate Valves for Water Supply Service.

3. AWWA C550 - Protecting Interior Coatings for Valves and Hydrants.

D. Manufacturers Standardization Society of the Valve and Fittings Industry (MSS):

1. MSS SP-70 - Gray Iron Gate Valves, Flanged and Threaded Ends.

2. MSS SP-80 - Bronze Gate, Globe, Angle and Check Valves.

E. NSF International (NSF):

1. NSF/ANSI Standard 61 - Drinking Water System Components - Health Effects

2. NSF/ANSI Standard 372 - Drinking Water System Components - Lead Content

1.3 SUBMITTALS

A. Section 01 33 00 - Submittal Procedures: Requirements for submittals.

B. As required by Section 40 05 51, Common Requirements Results for Process Valves.

PART 2 PRODUCTS

2.1 GENERAL

A. All materials in contact with potable water shall conform to ANSI/NSF Standard 61 and meet the “lead free” requirements of the Safe Drinking Water Act amendment, effective January 4, 2014, as per the lead content evaluation procedures outlined in NSF/ANSI Standard 372.1.

1. All fittings shall either be cast or permanently stamped with markings identifying the item as complying with NSF 61 per the requirements of NSF 372 for “lead free”.

2. All brass in contact with potable water shall comply with ASTM B584.

2.2 RESILIENT-SEATED GATE VALVES

A. Description:

1. Comply with AWWA C509 or AWWA C515.

2. Minimum Pressure Rating:

a. Twelve-inch Diameter and Smaller: 200 pounds per square inch (gauge) (psig).

b. Sixteen-inch Diameter and Larger: 150 psig.

3. End Connections: As shown in the Drawings.

a. Standard mechanical joint ends comply with ANSI/AWWA C111.

b. Flanged end dimensions and drilling comply with ANSI/ASME B16.1, class 125. Comply with AWWA C115 & ASME 16.5.

1) The Contractor shall coordinate with pipe, valve, and fitting suppliers to make certain pipe, valve, and fitting flanges match in bolt pattern.

4. Gear Actuators: Conforming to AWWA C509 or AWWA C515 for manual valves..

5. Linings and Coatings:

a. Corrosion-resistant fusion bonded epoxy conforming to AWWA C550 and NSF 61.

b. All internal and external ferrous surfaces.

c. Do not coat flange faces of valves.

6. Bi-directional flow.

B. Operation:

1. Non-rising stem.

2. Open counterclockwise when viewing the valve from above, unless otherwise indicated in the Drawings.

3. Buried Valves: All buried valves shall be provided with 2-inch square operating nuts.

4. In-Plant Service Valves: Valves for in-plant or exposed service shall be furnished with handwheel operators, unless otherwise specified in Section 40 05 51, Common Requirements Results for Process Valves.

C. Materials:

1. Wedge:

a. ASTM A126, cast iron or ASTM A536, ductile iron.

b. Fully encapsulated with molded rubber.

2. Body and Bonnet:

a. ASTM A126, cast iron or ASTM A536, ductile iron.

3. Stem, Stem Nuts, Glands, and Bushings: ASTM B584, bronze.

4. Valve Body Bolting: Stainless steel.

D. Manufacturers:

1. Clow Valve Company.

2. Mueller Company.

2.3 GENERAL-DUTY GATE VALVES – SMALLER THAN 3 INCHES

A. Two inches and Smaller:

1. MSS SP 80, Class 125.

2. Body and Trim: ASTM B584, bronze.

3. Bonnet: Union.

4. Operation: Handwheel.

5. Inside screw.

6. Wedge Disc: Solid; ASTM B584, bronze.

7. End Connections: Threaded.

B. Two and one-half inches to 3 inches:

1. MSS SP 70, Class 125.

2. Stem: Non-rising.

3. Body: ASTM A126, cast iron.

4. Trim: Bronze.

5. Bonnet: Bolted bonnet.

6. Handwheel, outside screw and yoke.

7. Wedge Disc: Solid, with bronze seat rings.

8. End Connections: ASME B16.1, ASME B16.5, ASME B16.42, flanged.

2.4 SOURCE QUALITY CONTROL

A. Testing: Test gate valves according to AWWA C509 or AWWA C515.

PART 3 EXECUTION

3.1 INSTALLATION

A. As required by Section 40 05 51 - Common Requirements Results for Process Valves.

B. Install according to Manufacturer's instructions.

C. Support valves in plastic piping to prevent undue stresses on piping.

END OF SECTION

SECTION 40 05 51.24 - CHECK VALVES

PART 1 GENERAL

1.1 SUMMARY

A. Work in this Section includes check valves for use in water facilities. Work includes the furnish and install of all swing and silent check valves, complete, as shown on the Drawings and specified herein, including coating and lining, appurtenances, operators, and accessories.

B. Section includes:

1. Swing check valves, 1-inch through 4-inch diameter.
2. Swing check valves, 4-inch diameter and larger
3. Silent check valves.

1.2 REFERENCE STANDARDS

A. American Society of Mechanical Engineers (ASME):

1. ASME B16.1 - Gray Iron Pipe Flanges and Flanged Fittings.
2. ASME B16.11 - Forged Fittings, Socket-Welding and Threaded.
3. ASME B16.42 - Ductile Iron Pipe Flanges and Flanged Fittings.

B. ASTM International (ASTM):

1. ASTM A126 - Standard Specification for Gray Iron Castings for Valves, Flanges, and Pipe Fittings.
2. ASTM A536 - Standard Specification for Ductile Iron Castings.
3. ASTM B62 - Standard Specification for Composition Bronze or Ounce Metal Castings.
4. ASTM B148 - Standard Specification for Aluminum-Bronze Sand Castings.
5. ASTM D1784 - Standard Specification for Rigid Poly(Vinyl Chloride) (PVC) Compounds and Chlorinated Poly(Vinyl Chloride) (CPVC) Compounds.
6. ASTM D2000 - Standard Classification System for Rubber Products in Automotive Applications.
7. ASTM D3222 - Standard Specification for Unmodified Poly(Vinylidene Fluoride) (PVDF) Molding Extrusion and Coating Materials.
8. ASTM D4101 - Standard Specification for Propylene Injection and Extrusion Materials.

C. American Water Works Association (AWWA):

1. AWWA C508 - Swing-Check Valves for Waterworks Service, 2-In. Through 24-In. (50-mm Through 600-mm) NPS.

2. AWWA C550 – Protective Interior Coatings for Valves and Hydrants

D. NSF International (NSF):

1. NSF 61 - Drinking Water System Components - Health Effects.

1.3 SUBMITTALS

A. Section 01 33 00 - Submittal Procedures: Requirements for submittals.

B. As required by Section 40 05 51, Common Requirements Results for Process Valves.

PART 2 PRODUCTS

2.1 SWING CHECK VALVES, 1-INCH THROUGH 4-INCH DIAMETER

A. Description:

1. Horizontal T-pattern style.

2. 200# WOG.

3. Capable of functioning in the vertical position.

4. Connections shall be standard threaded or threaded for fire hose connections where shown on plans

B. Materials:

1. Body Cap and Disc: Brass conforming to ASTM B584 C85400.

C. Manufacturer:

1. Figure 246 as manufactured by Red White Valve.

2. Substitutions: As approved by the Engineer.

2.2 SWING CHECK VALVES, 4-INCH DIAMETER AND LARGER

A. Description:

1. Meeting requirements of AWWA C508.

2. Type: Swing, resilient seated, with outside lever and adjustable weight or spring.

3. Flow Area: Full open.

4. Mounting: Horizontal or vertical.

5. Shall close tightly when the pressure downstream of the valve disc exceeds the upstream pressure.

6. Working Pressure: 150 psi

7. Tight sealing, shockless in operation and absolutely prevent the return of water back through the valve.

8. The disc shall be attached to the sic arm by means of a center pin, disc nut, and washer providing 360-degree angular articulation but not rotation.

9. Pin Shaft:

    a. Discs shall be suspended from a non-corrosive hinge pin shaft that shall rotate freely without the need for external lubrication.

    b. The shaft shall be sealed where it passes through the body by means of a stuffing box and adjustable packing.

10. End Connections: As shown on Drawings**.** End connections shall be rated to the working pressure requirements specified above.

B. Materials:

1. Body and Disc: Constructed of heavy cast iron conforming to ASTM A126 class B, or ductile iron conforming to ASTM A536.

2. Cover: Steel conforming to ASTM A36 or Ductile iron conforming to ASTM A536.

3. Disc Arm: Ductile iron conforming to ASTM A536.

4. Body Seat: Type 316 stainless steel or Bronze ASTM B62.

5. Disc Seat: Field-replaceable, NBR or Buna-N.

6. Hinge Pin and Key: Stainless steel.

7. Rubber Components: NBR or Buna-N.

8. Connecting Hardware: Stainless steel.

C. Finishes:

1. Epoxy lining and coating conforming to AWWA C550.

2. For potable water service, epoxy lining and coating shall meet be provided with NSF 61 certification.

D. Manufacturer:

1. Val-Matic Series 7800.

2. Substitutions: As approved by the Engineer.

2.3 SILENT CHECK VALVES

A. Description:

1. Type: Globe-style, silent operating type that begins to close as the forward velocity diminishes and be fully closed at zero velocity, preventing flow reversal and resultant water hammer or shock.

2. Valve design shall incorporate a center-guided, spring-loaded poppet, guided at opposite ends and having a short linear stroke that generates a flow area equal to the pipe.

3. Valve Interior: Contoured and unrestricted to achieve maximum flow capacity along with minimum pressure drop.

4. Installation: Operation of the valve shall not be affected by the position of installation. It shall be capable of operating in the horizontal or vertical position with the flow op or down.

5. Valve Disc: Concave to the flow direction providing for disc stabilization, maximum strength, and minimal flow velocity to fully open the valve.

6. All component parts shall be field replaceable without the need of special tools.

7. A replaceable guide bushing shall be provided and held in position by the valve's spring.

8. Spring: Designed to withstand 100,000 cycles without failure and exert a force which allows the valve to start opening at a differential pressure of .5 pounds per square inch (psi) (.04 kilograms per square centimeter (kg/cm2)) and to fully open at a flow velocity of 4 feet per second (1.22 meters per second).

9. The valve disc and seat shall be field replaceable and have a seating surface finish of 32 micro-inch or better to insure positive seating at all pressures.

10. Valve shall be hydrostatically tested at 1.5 times the rated working pressure.

11. Working Pressure: 150 psi

12. End Connections: As shown on Drawings. End connections shall be rated to the working pressure requirements specified above.

B. Materials:

1. Body: ASTM A536, ductile iron.

2. Trim: Stainless steel.

3. Spring: Stainless steel.

4. Resilient Seat: Buna-N

C. Finishes:

1. Epoxy lining and coating conforming to AWWA C550.

2. For potable water service, epoxy lining and coating shall meet be provided with NSF 61 certification.

D. Manufacturer:

1. Val-Matic, 1800 series.

2. Cla-Val, 581 series.

3. Approved equal.

2.4 SOURCE QUALITY CONTROL

A. Testing:

1. Hydrostatically test check valves at twice rated pressure, in conformance with requirements of AWWA C508.

2. Permitted Leakage at Indicated Working Pressure: None.

PART 3 EXECUTION

3.1 INSTALLATION

A. Install check valves according to AWWA C508, Section 40 05 51 Common Requirements Results for Process Valve, and as recommended by Manufacturer.

3.2 SERVICES PROVIDED BY MANUFACTURER'S REPRESENTATIVE

A. Provide the services of the Valve Manufacturer's representative to verify proper installation of the valves and to adjust the valves when construction is complete.

END OF SECTION

SECTION 40 05 57 - ACTUATORS FOR PROCESS VALVES AND GATES

PART 1 GENERAL

1.1 REQUIREMENTS

A. The Contractor shall provide all valve and gate actuators and appurtenances, complete and operable, in accordance with the Contract Documents.

B. The provisions of this Section shall apply to all valves and gates, except where otherwise indicated in the Contract Documents.

C. Unit Responsibility: A single manufacturer shall be made responsible for furnishing the work and for coordination of design, assembly, testing, and installation of the work of each type of valve and gate; however, the Contractor shall be responsible to the COMPANY for compliance with the requirements of each valve and gate section. Unless otherwise indicated, the single manufacturer shall be the Manufacturer of the valve or gate.

D. Manufacturer: All electric actuators supplied will be from the same Manufacturer. The actuators and valves shall be furnished and installed by the valve supplier as a unit assembly, complete in all respects. The actuators and gates shall be furnished and installed by the gate supplier as a unit assembly, complete in all respects.

1.2 CONTRACTOR SUBMITTALS

A. General: Submittals shall be furnished in accordance with Section 01 33 00 – Contractor Submittals.

B. Shop Drawings: Shop Drawings of all actuators shall be submitted together with the valve and gate submittals as a complete package.

1.3 QUALITY ASSURANCE

A. Qualifications

1. Technologies and devices used in the actuator must have a minimum of five (5) years of commercial operating experience for that specific manufacturer.

B. Testing

1. Electric actuators shall be listed by a testing agency acceptable to the COMPANY in accordance with the latest version of the National Electrical Code, with the stamped or mark of that agency on the outside housing. Acceptable agencies include but are not limited to, UL, FM, and CSA.

PART 2 PRODUCTS

2.1 GENERAL

A. General: Unless otherwise indicated, all shut-off and throttling valves, and externally- actuated valves and gates, shall be provided with manual or power actuators. The Contractor shall furnish all actuators complete and operable with mounting hardware, motors, gears, controls, wiring, solenoids, handwheels, levers, chains, and extensions, as applicable. All actuators shall be capable of holding the valve in any intermediate position between fully-open and fully-closed without creeping or fluttering. All wires of motor-driven actuators shall be identified by unique numbers.

B. Manufacturers: Where indicated, certain valves and gates may be provided with actuators manufactured by the valve or gate Manufacturer. Where actuators are furnished by different manufacturers, the Contractor shall coordinate selection to have the fewest number of manufacturers possible.

C. Materials: All actuators shall be current models of the best commercial quality materials and liberally-sized for the maximum expected torque. All materials shall be suitable for the environment in which the valve or gate is to be installed.

D. Mounting: All actuators shall be securely mounted by means of brackets or hardware specially designed and sized for this purpose and of ample strength. The word "open" shall be cast on each valve or actuator with an arrow indicating the direction to open in the counter-clockwise direction. All gear and power actuators shall be equipped with position indicators.

E. Standard: Unless otherwise indicated and where applicable, all actuators shall be in accordance with ANSI/AWWA C 540 - Standard for Power-Actuating Devices for Valves and Sluice Gates.

F. Functionality: Electric, pneumatic, and hydraulic actuators shall be coordinated with power and instrumentation equipment indicated elsewhere in the Contract Documents.

2.2 MANUAL ACTUATORS

A. General: Unless otherwise indicated, all valves and gates shall be furnished with manual actuators. Valves in sizes up to and including 4 inches shall have direct acting lever or handwheel actuators of the Manufacturer's best standard design. Larger valves and gates shall have gear-assisted manual actuators, with an operating pull of maximum 60 pounds on the rim of the handwheel. All buried and submerged gear- assisted valves, all gates, all gear-assisted valves for pressures higher than 250 psi, all valves 30 inches in diameter and larger, and where so indicated, shall have worm-gear actuators, hermetically-sealed and grease-packed, where buried or submerged. All other valves 6 inches to 24 inches in diameter may have traveling-nut actuators, worm- gear actuators, spur- or bevel-gear actuators, as appropriate for each valve.

B. Buried Valves: Unless otherwise indicated, all buried valves shall have stainless steel extension stems to grade, with square nuts or floor stands, position indicators, and cast- iron or steel pipe extensions with valve boxes, covers, and operating keys. Where so indicated, buried valves shall be in cast-iron, concrete, or similar valve boxes with covers of ample size to allow operation of the valve actuators. Covers of valve boxes shall be permanently labeled as

requested by the local Utility Company or the Engineer. Wrench-nuts shall have a minimum of 2 operating keys, or one key per 10 valves, whichever is greater, shall be furnished.

C. Chain Actuator: Manually-activated valves with the stem located more than 6 feet above the floor or operating level shall be furnished with chain drives consisting of sprocket-rim chain wheels, chain guides, and operating chains, and be provided by the valve Manufacturer. The wheel and guide shall be of ductile-iron, cast-iron, or steel, and the chain shall be hot-dip galvanized steel or stainless steel, extending to 4 feet above the operating floor level. The valve stem of chain-actuated valves shall be extra strong to allow for the extra weight and chain pull. Hooks shall be provided for chain storage where chains interfere with pedestrian traffic.

D. Floor Boxes: Hot-dip galvanized cast-iron or steel floor boxes and covers to fit the slab thickness shall be provided for all operating nuts in or below concrete slabs. For operating nuts in the concrete slab, the cover shall be bronze-bushed.

E. Manual Worm-Gear Actuator: The actuator shad consist of a single or double reduction gear unit contained in a weather-proof cast-iron or steel body with cover and minimum 12-inch diameter handwheel. The actuator shall be capable of 90-degree rotation and shall be equipped with travel stops capable of limiting the valve opening and closing. The actuator shall consist of spur or helical gears and worm-gearing. The spur or helical gears shall be of hardened alloy steel and the worm-gear shall be alloy bronze. The worm-gear shaft and the handwheel shaft shall be of 17-4 PH or similar stainless steel. All gearing shall be accurately cut with hobbing machines. Ball or roller bearings shall be used throughout. Actuator output gear changes shall be mechanically possible by simply changing the exposed or helical gearset ratio without further disassembly of the actuator. All gearing shall be designed for a 100 percent overload.

2.3 ELECTRIC MOTOR ACTUATORS

A. General

1. Actuators shall be non-intrusive, intelligent quarter-turn type, suitable for use on a nominal 480 VAC, three phase, 60 Hertz power supply and are to incorporate motor, integral reversing starter, local control facilities, and terminals for remote control and indication connections within a self-contained, sealed enclosure.

2. The actuator shall include a device to ensure that the motor runs with the correct rotation for the required direction of valve travel with either phase sequence of the three-phase power supply connected to the actuator.

3. It shall be possible to carry out the setting of the torque, turns, and configuration of the indication contacts without opening or removing any electrical compartment covers.

4. Diagnostic information shall be available from both an integrally mounted display window and through non-intrusive means of reading and writing data to the actuator.

5. Two-way communication must be possible to facilitate downloading actuator setup.

6. During loss of electric power supply, fail in last valve position.

7. Operate from Full Closed to Full Open position or the reverse so that stem travel speed is 1 foot per minute.

B. Actuator Sizing

1. The actuator shall be sized to guarantee valve closure at the specified differential pressure. The safety margin of motor power available for seating and unseating the valve shall be sufficient to ensure torque switch trip at maximum valve torque with the supply voltage 10% below nominal.

C. Temperature

1. The actuator shall be capable of functioning in an ambient temperature ranging from minus 13 F (-25° C) to plus 160° F (+ 70° C).

D. Torque Controller

1. The motor control PCB shall monitor and control the amount of torque output produced by the motor. Motor current shall be measured via a sensing resistor mounted on the PCB, which is digitally filtered and then temperature compensated to produce the final calibrated output torque of the actuator. Torque setting shall be able to be set between 40% and 100% of rated torque and shall be adjustable via a non-intrusive setting tool using Infrared Data Access (IrDA) technology.

E. Motor

1. Motors shall be sized for a minimum 25 percent duty and a rated running torque equal to 35 percent of the operator capacity at a rated running time of 15 minutes, without exceeding the allowable NEMA temperature rise for class F insulation.

2. Motors shall be totally-enclosed, non-ventilated, direct current motor.

3. The electric motor shall be a low inertia motor. The motor shall be controlled by a toroidal transformer unit, which shall also include a thermostat for motor circuit protection. Motors shall be specifically designed and built by the actuator manufactured for electric actuator service.

4. If three phase-powered actuators are provided, the actuator shall include automatic detection and correction of 3-phase power supply to assure proper open/close directions.

5. The motor control PCB shall restrict the amount of current to prevent damage to the motor, integral switching devices or toroid transformer. A 20A fuse in the transformer secondary circuit and anti-surge fuse in the primary circuit shall provide further protection.

6. Motor removal shall be possible without loss of lubricant

F. Gearing and Gearbox

1. The actuator gearing shall be totally enclosed in a lubricant filled gearcase suitable for operation at any angle. Food grade lubricants approved by the manufacturer shall be used to lubricate the gearcase. Special or exotic lubricants shall not be used as they may be expensive or difficult to source in some locations.

2. Gearbox shall house and operate an appropriate coupling as follows.

   a. Coupling of operator to a multi-turn threaded rising stem valve shall be by means of threaded high tensile bronze top entry stem nut installed in a declutchable thrust base. Stem nut shall be keyed to mate with the internal bore and keyway of the operator sleeve.

   b. Coupling of operator to a multi-turn non-rising stem shaft shall be by a high- tensile aluminum/bonze drive bushing that is easily replaceable.

3. Final stage of the operator gear train shall consist of a steel worm and a bronze alloy worm gear. Other gears shall be heated treated alloy steel or high tensile bronze. Gear train shall be supported throughout by antifriction ball or roller bearings. The operator shall be self-locking in either motor or handwheel mode.

G. Hand Operation

1. A handwheel shall be provided for emergency operation engaged when the motor is declutched by a lever or similar means; the drive being restored to power automatically by starting the motor. The handwheel declutch mechanism shall include an output contact to indicate actuator manual operation. The hand/auto selection lever should be padlockable in both "Hand" and "Auto" positions. It should be possible to select hand operation while the actuator is running or start the actuator motor while the hand/auto selection lever is locked in "Hand" without damage to the drive train.

2. Handwheel shall be disengaged by motor operation.

3. Actuator shall incorporate a mechanism to track valve position while operated with the handwheel when electric power is off.

H. Position Setting Range

1. An intelligent micro controller on the motor PCB shall monitor and control two Hall Effect position sensors. Incremental encoders requiring batteries to retain settings upon loss of power shall not be accepted. The sensors shall employ a magnetic pulse system to measure the accuracy of the actuator's stroke. Position limits shall be factory set to 90° degrees stop bolt position, with a limit setting range of 10° to 1800°, and maximum angular resolution to 0.1°.

I. Controls

1. Control power shall be provided from an integral 24 VDC or 120 VAC supply unless a separate power source is shown on the electrical drawings. The transformer shall be sized to operate at not more than 80 percent of rating with the connected load shown. The transformer shall have protective secondary fusing. Operators shall be provided with an integral control station. The control station shall include "LOCAL/OFF/REMOTE" and "OPEN/STOP/CLOSE" switches. Open and Close positions shall be configurable for momentary or maintained-operation. Open, Close, and Stop

2. Connections for external remote controls shall be suitable for any one or more of the following methods of control:

    a. Open and Close
    b. Overriding Emergency, Shutdown to Close (or Open) Valve from a "Make" Contact.
    c. Two-Wire Control, Energize to Close (or Open), De-Energize to Open (or Close)

J. Set Up, Monitoring and Diagnostics

1. Facilities shall be provided for monitoring actuator operation and availability as follows:

2. Monitor (availability) relay, having one change-over contact, the relay being energized from the control transformer only when the Local/Off/Remote selector is in the "Remote" position and thermostat is not “tripped” to indicate that the actuator is available for remote (control room) operation.

3. Where required, it shall be possible to provide indication of thermostat trip and "Remote" selected as discrete signals.

4. A non-intrusive hand-held computer must be available, capable of two-way communication for uploading and downloading all variables for the actuator as well as performing detailed diagnostics.

5. Actuators shall include a diagnostic data logger module, which will store and enable download of historical actuator data logger information to permit analysis of changes in actuator or valve performance. It shall be possible for customer to access data via non-intrusive infrared means using either a notebook PC or hand- held windows CE based ‘Personal Digital Assistant (PDA)’ capable of duplex IrDA communications. Appropriate diagnostic software shall be provided to allow configuration and diagnostic information to be reviewed, analyzed and reconfigured.

6. Provision shall be made to display valve torque demand as a percent of rated actuator torque and position simultaneously, so as to facilitate valve troubleshooting and diagnostics. The data logger shall also enable the retrieval of all configurable actuator date and time-stamped events, including the ability to search for occurrences of any particular event. Valve torque profiles shall be available in 1° positional increments. The diagnostics shall also enable retrieval of at least three types of alarms – actuator alarms, valve alarms and control system alarms.

7. A Setting Tool shall be provided and used for non-intrusive calibration and interrogation of the actuator. This Setting Tool will provide speedy interrogation capabilities as well as security in a non-intrusive intrinsically safe watertight casing. The Setting Tool shall enable the user to extract and store actuator configuration and data logger files within the Tool. The Setting Tool shall store up to ten (10) configuration and four (4) data logger files. Stored configuration and data logger files shall also be able to be uploaded to both the actuators and to diagnostic software provided by the actuator manufacturer.

K. Actuators for Modulation Duty

1. Use the above specification with the following changes and additions. The actuator shall incorporate a fast switching main control board that responds to signal changes within

100ms for modulating duty. The starter shall be suitable for 1500 starts per hour. If shown on the valve schedule, the actuator shall be capable of responding to a remote 4-20 mA control signal and positioning itself accordingly between 0-100% valve travel as well as providing a contactless transmitter to give a 4-20 mA analog signal corresponding to valve travel for remote indication. It shall be possible to adjust Dead Band (0-9.9% of travel) and a Motion Inhibit Timer (2- 99 secs), and select action upon loss of signal.

L. Enclosure

1. Double-sealed 'O' Ring design shall provide a termination chamber that is separate and sealed from the control chamber. Control components shall remain sealed and protected when the termination cover is removed. Actuators shall be sealed, watertight to NEMA 6, and shall at the same time have an inner watertight and dustproof 'O' ring seal between the terminal compartment and the internal electrical elements of the actuator fully protecting the motor and all other internal electrical elements of the actuator from ingress of moisture and dust when the terminal cover is removed on site for cabling.

2. Enclosure must allow for temporary site storage without the need for electrical supply connection.

3. All external fasteners shall be stainless steel.

   a. Actuators for explosion/hazardous applications shall in addition be certified flameproof for Zones 1 and 2 (Divisions 1 and 2) Group C, D, E, F, G hazardous areas.

   b. Double-sealed design shall provide a termination chamber that is separate and sealed from the control chamber. Control components shall remain sealed and protected when the termination cover is removed.

M. Remote Valve Position

1. In the event of a (main) power (supply) loss or failure, the position contacts must continue to be able to supply remote position feedback and maintain interlock capabilities.

2. A backup power source must be provided in the actuator to ensure correct remote indication should the actuator be moved manually when the power supply is interrupted.

3. The position of the actuator and valve must be updated contemporaneously, even when the power supply is not present.

4. Four contacts shall be provided which can be selected to indicate any position of the valve with each contact selectable as normally open or normally closed. The contacts shall be rated at 5A, 250V AC, 30V DC.

5. As an alternative to providing valve position, any of the four above contacts shall be selectable to signal one of the following:

   a. Valve Opening or Closing
   b. Valve Moving (Continuous or Pulsing)
   c. Motor Tripped on Torque in Mid-Travel
   d. Motor Stalled

e. Actuator Being Operated by Handwheel
f. Open or Close Interlock Active
g. ESD Active
h. Motor Tripped on Torque in Mid-Travel
i. Motor Tripped on Torque Going Open
j. Motor Tripped on Torque Going Closed
k. Pre-Set Torque Exceeded
l. Valve Jammed
m. Actuator Being Operated by Handwheel
n. Lost Main Power Phase
o. Customer 24V DC or 24V AC Supply Lost
p. Battery Low
q. Internal Failure Detected
r. Thermostat Tripped

N. Local Position Indication

1. The actuator must provide a local display of the position of the valve, even when the power supply is not present. The display shall be able to be rotated in 90 degree increments in order to provide easy viewing regardless of actuator mounting position.

2. The local display should be large enough to be readable from a distance of six feet (6') when the actuator is powered up. In addition to valve position, the local display shall also display torque in percent of rated value as well as customer-configurable multilingual text.

3. The actuator shall include a digital position indicator with a display from fully open to fully closed in 1% increments. Red, green, and yellow lights corresponding to Open, Closed, and Intermediate positions shall be included on the actuator. The digital display shall be maintained even when the power to the actuator is isolated.

O. Integral Push Button and Selector

1. Integral to the actuator shall be local controls for Open, Close, and Stop, and a local/remote selector switch padlockable in any one of the following three positions:

   a. Local Control Only

   b. Off (No Electrical Operation)

   c. Remote Control plus Local Stop Only.

2. It shall be possible to select maintained or non-maintained local control.

3. The local controls shall be arranged so that the direction of valve travel can be reversed without the necessity of stopping the actuator. It shall be possible to program the actuator without removal of any covers.

P. Actuator Networking

1. Provisions shall be made for connectivity with the following interfaces available:

   a. None.

Q. Special Features

1. An LCD indicator panel shall provide continuous position and torque information as well as valve status, alarm, and diagnostic information.

2. Actuators shall include a diagnostic data logger module, which will store and enable download of historical actuator data logger information to permit analysis of changes in actuator or valve performance. It shall be possible for customer to setup, calibrate and access actuator data via non-intrusive infrared means using any of three methods: Setting Tool, Laptop PC or hand-held Windows CE-based 'Personal Digital Assistant (PDA)' capable of duplex IrDA communications. Appropriate diagnostic software shall be provided by the actuator manufacturer to allow configuration and diagnostic information to be reviewed, analyzed and reconfigured. One hand-held programming setting tool shall be provided for every 10 actuators shipped. Data download shall be carried out without removing any actuator covers.

3. Actuator calibration, setup, and communications settings shall be stored in non- volatile memory and shall be retained in the event of loss of power. In addition, battery power shall ensure that local indication of valve position is provided under power-failure conditions.

4. Non-intrusive local control switches shall communicate switch position to the microprocessor without penetrations in the actuator housing.

5. Actuator's microprocessor shall continuously accept control signals (when in Remote) and communicate position, torque, status, alarm, and diagnostic data to the plant process control system via a data network connection.

R. Performance Test Certificate

1. Each actuator must be performance tested and individual test certificates shall be supplied free-of-charge. The test equipment should simulate a typical valve load and the following parameters should be recorded:

   a. Current at maximum torque setting
   b. Torque sensing tripping points in both the open and closed directions of travel
   c. Actuator Output Speed or Operating Time

2. In addition, the test certificate should record details of specification, such as gear ratios for both manual and automatic drive, closing direction, and wiring diagram code number.

S. Warranty

1. Each actuator shall be warranted for a minimum of 12 months of operation up to a maximum of 24 months from shipment. This warranty shall be held in effect regardless of

pre-commissioning conditions in a typical indoor or outdoor environment as long as the actuator is not abused or disassembled. This warranty shall not require the use of special storage procedures (such as the use of indoor storage, plastic bags, desiccants, and the energization of heater(s) in order to be maintained.

T. Manufacturers: Where indicated, certain valves and fates may be provided with operators manufactured by the valve or gate manufacturer. Where operators are furnished by different manufacturers, coordinate selection to have the fewest number of manufactures feasible electronic actuators for electronically-actuated valves shall be as manufacturer by:

1. AUMA
2. EIM
3. Limitorque
4. Rotork IQ Series
   a. Model # IQT500
5. Approved Equal

PART 3 EXECUTION

3.1 EXECUTION

A. Field Instruments

1. Field representatives of manufacturers of valves or gates with pneumatic, hydraulic, or electric actuators shall adjust actuator controls and limit-switches in the field for the required function.

3.2 INSTALLATION

A. It shall be the responsibility of the Contractor to handle, store and install the equipment specified in this Section in strict accordance with the manufacturer's recommendations.

B. The Contractor shall review the installation drawings and installation instruction prior to installing the actuators.

3.3 FIELD TESTING

A. After installation, all actuators shall be field tested in the presence of the Engineer and COMPANY to ensure that all items of equipment are in full compliance with this Section.

B. Each actuator shall be cycled to confirm that they operate without binding, scraping, or distorting. The effort to open and close manual operators shall be measured, and shall not exceed the maximum operating effort specified above. Electric motor actuators shall function smoothly and without interruption.

END OF SECTION

SECTION 40 05 67.36 - PRESSURE-REGULATING VALVES

PART 1 GENERAL

1.1 SUMMARY

A. Section Includes:

1. Pressure-reducing valves.
2. Pressure-sustaining valves.

1.2 REFERENCE STANDARDS

A. ASME International:

1. ASME B1.20.1 - Pipe Threads, General Purpose.
2. ASME B16.5 - Pipe Flanges and Flanged Fittings: NPS 1/2 through NPS 24 Metric/Inch Standard.
3. ASME B16.24 - Cast Copper Alloy Pipe Flanges and Flanged Fittings: Classes 150, 300, 600, 900, 1500, and 2500.
4. ASME B16.42 - Ductile Iron Pipe Flanges and Flanged Fittings, Classes 150 and 300.

B. ASTM International:

1. ASTM A126 - Standard Specification for Gray Iron Castings for Valves, Flanges, and Pipe Fittings.
2. ASTM A216/A216M - Standard Specification for Steel Castings, Carbon, Suitable for Fusion Welding, for High-Temperature Service.
3. ASTM A536 - Standard Specification for Ductile Iron Castings.
4. ASTM B62 - Standard Specification for Composition Bronze or Ounce Metal Castings.

C. American Water Works Association:

1. AWWA C550 - Protective Interior Coatings for Valves and Hydrants.

D. NSF International:

1. NSF 61 - Drinking Water System Components - Health Effects.
2. NSF 372 - Drinking Water System Components - Lead Content.

1.3 COORDINATION

A. Coordinate with installation of process piping.

1.4 SUBMITTALS

A. Section 01 33 00 - Submittal Procedures: Requirements for submittals.

B. As required by Section 40 05 51, Common Requirements Results for Process Valves.

1.5 CLOSEOUT SUBMITTALS

A. Section 01 70 00 - Execution and Closeout Requirements: Requirements for submittals.

B. Project Record Documents: Record actual locations of pressure-regulating valves.

1.6 QUALITY ASSURANCE

A. Materials in Contact with Potable Water: Certified to NSF Standards 61 and 372.

B. Perform Work according to COMPANY standards.

1.7 QUALIFICATIONS

A. Manufacturer: Company specializing in manufacturing products specified in this Section with minimum three years' experience.

1.8 DELIVERY, STORAGE, AND HANDLING

A. Inspection: Accept materials on Site in Manufacturer's original packaging and inspect for damage.

B. Store materials according to Manufacturer instructions.

C. Protection:

1. Protect materials from moisture and dust by storing in clean, dry location remote from construction operations areas.

2. Furnish temporary end caps and closures on piping and fittings and maintain in place until installation.

3. Provide additional protection according to Manufacturer instructions.

1.9 EXISTING CONDITIONS

A. Field Measurements:

1. Verify field measurements prior to fabrication.

2. Indicate field measurements on Shop Drawings.

1.10 WARRANTY

A. Section 01 70 00 - Execution and Closeout Requirements: Requirements for warranties.

B. Furnish three-year Manufacturer's warranty for atmospheric vacuum breaker backflow preventers.

C. Cavitation Damage: Warrant that valves will not suffer cavitation damage within a five-year period from date of installation when exposed to specified operating conditions.

PART 2 PRODUCTS

2.1 PRESSURE-REDUCING VALVES

A. Manufacturers:

1. Cla-Val 90-01.

2. Substitutions: As approved by Engineer.

3. Furnish materials according to COMPANY standards.

B. Description:

1. Normally open valves to maintain constant downstream pressure regardless of changing flow rate or varying inlet pressure.

2. Type: Pilot operated.

3. Furnish V-ports for pressure control at low flows.

4. Indicator Rod: Attached to piston for visual position indication.

C. Pilot Valves:

1. Type: Globe.

2. Body: Ductile iron.

D. End Connections:

1. Flanged, ASME B16.42, Class 150.

E. Performance and Design Criteria:

1. Design criteria per valve schedule.

2. Range: Field adjustable from near zero to 110 percent.

F. Materials:

1. Body: Ductile iron, ASTM A536.

2. Disc and Diaphragm:

a. Buna-N rubber.

b. Disc Retainer and Diaphragm Washer: Cast iron.

3. Trim: Stainless steel.

4. Stem, Nut, and Spring: Stainless steel.

5. Packing: PTFE.

6. Control Piping: Brass with stainless-steel wetted trim.

G. Interior Coating: Coat cast-iron and ductile-iron surfaces with epoxy coating according to AWWA C550.

2.2 PRESSURE-SUSTAINING VALVES

A. Manufacturers:

1. Cla-Val 50-01.

2. Substitutions: As approved by Engineer.

3. Furnish materials according to COMPANY standards.

B. Description:

1. Valve opens on increasing upstream pressure and closes on decrease in upstream pressure to maintain minimum set-point upstream pressure regardless of changing flow rate or varying downstream pressure.

2. Type: Pilot operated.

3. Furnish V-ports for pressure control at low flows.

4. Indicator Rod: Attached to piston for visual position indication.

C. Pilot Valves:

1. Type: Globe.

2. Body: Ductile iron.

D. End Connections:

1. Flanged, ASME B16.42, Class 150.

E. Performance and Design Criteria:

1. Design criteria per valve schedule.

2. Range: Field adjustable from near zero to 110 percent.

F. Materials:

1. Body: Ductile iron, ASTM A536.

2. Disc and Diaphragm:

a. Buna-N rubber.

b. Disc Retainer and Diaphragm Washer: Cast iron.

3. Trim: Stainless steel.

4. Stem, Nut, and Spring: Stainless steel.

5. Packing: PTFE.

6. Control Piping: Brass with stainless-steel wetted trim.

G. Interior Coating: Coat cast-iron and ductile-iron surfaces with epoxy coating according to AWWA C550.

2.3 SOURCE QUALITY CONTROL

A. Section 01 45 00 - Quality Control: Requirements for testing, inspection, and analysis.

B. Provide shop inspection and testing of completed assembly.

C. Certificate of Compliance:

1. If Manufacturer is approved by authorities having jurisdiction, submit certificate of compliance indicating Work performed at Manufacturer's facility conforms to Contract Documents.

2. Specified shop tests are not required for Work performed by approved manufacturer.

PART 3 EXECUTION

3.1 EXAMINATION

A. Section 01 70 00 - Execution and Closeout Requirements: Requirements for installation examination.

B. Verify that field dimensions are as indicated on Drawings.

C. Inspect existing flanges for nonstandard bolthole configurations or design and verify that new pipe and flanges mate properly.

3.2 PREPARATION

A. Section 01 70 00 - Execution and Closeout Requirements: Requirements for installation preparation.

B. Thoroughly clean end connections before installation.

C. Close pipe and equipment openings with caps or plugs during installation.

D. Cleaning: Clean surfaces to remove foreign substances.

3.3 INSTALLATION

A. According to Manufacturer instructions and local code requirements.

B. Install with nameplate and test cock accessible.

C. Installation Standards: Install Work according to Owner's standards.

3.4 FIELD QUALITY CONTROL

A. Section 01 45 00 - Quality Control: Requirements for inspecting and testing.

B. Section 01 70 00 - Execution and Closeout Requirements: Requirements for testing, adjusting, and balancing.

C. After installation, inspect for interferences and proper supports.

D. Testing:

1. Hydrostatic: Test each assembled valve, except control piping, hydrostatically at 1-1/2 times rated working pressure for minimum five minutes.

2. Leakage:

a. Test each valve for leakage at rated working pressure against closed valve.

b. Test Duration: Minimum 15 minutes.

c. Permitted Leakage: Zero.

3. Perform functional test on each valve to verify specified performance.

E. Repair damaged coatings with material equal to original coating.

3.5 CLEANING

A. Section 01 70 00 - Execution and Closeout Requirements: Requirements for cleaning.

B. Keep interior of valves clean as installation progresses.

3.6 DEMONSTRATION

A. Section 01 70 00 - Execution and Closeout Requirements: Requirements for demonstration and training.

B. Demonstrate equipment startup, shutdown, routine maintenance, and emergency repair procedures to Owner's personnel.

3.7 ATTACHMENTS

A. Pressure-Reducing Valve Schedule:

1. PRV-411:

a. Location: Arsenic pressure filter influent header.

b. Application: Raw water.

c. Flow Rate:

1) Minimum: 0 gpm.

2) Maximum: 500 gpm.

d. Pressure:

1) Set Point: 100 psi.

B. Pressure-Sustaining Valve Schedule:

1. PSV-424:

a. Location: Arsenic pressure filter effluent.

b. Application: Treated water.

c. Flow Rate:

1) Minimum: 0 gpm.

2) Maximum: 500 gpm.

d. Pressure:

1) Downstream:(tank range) psi.

2) Upstream Set Point: 40 psi.

END OF SECTION

SECTION 40 05 78 - MISCELLANEOUS VALVES

PART 1 GENERAL

1.1 SUMMARY

A. This Section includes miscellaneous valves not included in other Sections for use in and water treatment plants.

B. Section Includes:

1. Mud valves.
2. Solenoid valves.
3. Blow-off hydrant assemblies.
4. Flap valves.

1.2 REFERENCE STANDARDS

A. American Society of Mechanical Engineers (ASME):

1. ASME B16.1 - Gray Iron Pipe Flanges and Flanged Fittings.
2. ASME B16.5 - Pipe Flanges and Flanged Fittings: NPS 1/2 through 24 - Metric/Inch Standard.
3. ASME B16.11 - Forged Fittings, Socket-Welding and Threaded.
4. ASME B16.42 - Ductile Iron Pipe Flanges and Flanged Fittings: Classes 150 and 300.
5. ASME B1.20.1 - Pipe Threads, General Purpose (Inch).

B. ASTM International (ASTM):

1. ASTM A126 - Standard Specification for Gray Iron Castings for Valves, Flanges, and Pipe Fittings.
2. ASTM A536 - Standard Specification for Ductile Iron Castings.
3. ASTM B62 - Standard Specification for Composition Bronze or Ounce Metal Castings.

1.3 COORDINATION

A. Contractor shall be solely responsible to coordinate Work of this Section with piping, equipment, and appurtenances.

1.4 SUBMITTALS

A. Section 01 33 00 - Submittal Procedures: Requirements for submittals.

B. As required by Section 40 05 51, Common Requirements Results for Process Valves.

1.5 CLOSEOUT SUBMITTALS

A. Project Record Documents: Record actual locations of valves and actuators.

B. Operation and Maintenance Data: Submit information for valves.

1.6 MAINTENANCE MATERIAL SUBMITTALS

A. Spare Parts:

1. Furnish one set of Manufacturer's recommended spare parts.

B. Tools:

1. Furnish special wrenches and other devices required for Owner to maintain equipment.

2. Furnish compatible and appropriately labeled toolbox when requested by Owner.

1.7 QUALITY ASSURANCE

A. Cast Manufacturer's name, pressure rating, size of valve, and year of fabrication into valve body.

B. Valve Testing: Each valve body shall be tested under a test pressure equal to twice its design water-working pressure.

C. Certification: Prior to shipment, submit for all valves over 12 inches in diameter, certified, notarized copies of the hydrostatic factory tests, showing compliance with the applicable standards of AWWA, ANSI, ASTM, etc. Valves tested and supplied shall be trackable and traceable by serial number, tagged or otherwise noted on valve, upon arrival to Site.

D. Maintain clearances as indicated on Drawings.

E. Unless otherwise noted, all water works materials provided for the Project shall be new, of first-class quality and shall be made by reputable manufacturers.

F. All material of a like kind shall be provided from a single manufacturer, unless otherwise approved by the Engineer.

1.8 DELIVERY, STORAGE, AND HANDLING

A. Inspection: Accept materials on Site in Manufacturer's original packaging and inspect for damage.

B. Store materials according to Manufacturer instructions.

1. Store materials in areas protected from weather, moisture, or other potential damage.

2. Do not store materials directly on ground.

C. Protection:

1. Protect materials from moisture and dust by storing in clean, dry location remote from construction operations areas.

2. Protect valve ends from entry of foreign materials by providing temporary covers and plugs.

3. Provide additional protection according to Manufacturer instructions.

D. Handle products carefully to prevent damage to interior or exterior surfaces.

E. All defective or damaged materials shall be replaced with new materials at no cost to the Owner.

PART 2 PRODUCTS

2.1 GENERAL

A. All materials in contact with potable water shall conform to ANSI/NSF Standard 61 and meet the "lead free" requirements of the Safe Drinking Water Act amendment, effective January 4, 2014, as per the lead content evaluation procedures outlined in NSF/ANSI Standard 372.1.

1. All fittings shall either be cast or permanently stamped with markings identifying the item as complying with NSF 61 per the requirements of NSF 372 for "lead free".

2. All brass in contact with potable water shall comply with ASTM B584.

2.2 MUD VALVES

A. Description:

1. Type: Non-rising, threaded stem.

2. Furnish coupling nut, extension stem, stem guides, and operating stand as indicated on Drawings.

3. Operation: Nut with wrench.

4. End Connections: ASME B16.1, ASME B16.5, ASME B16.42, flanged.

B. Materials:

1. Body: ASTM A126, cast iron or ASTM A536, ductile iron.

2. Stem, Seat Ring, and Gate Ring: ASTM B62, bronze.

3. Connecting Hardware: Type 316 stainless steel.

4. Linings and Coatings:

a. Corrosion-resistant fusion bonded epoxy conforming to AWWA C550 and NSF 61.

b. All internal and external ferrous surfaces.

c. Do not coat flange faces of valves.

2.3 SOLENOID VALVES

A. Description:

1. Type: As indicated on Drawings.

2. Working Pressure: 100 psi.

3. Coil: Continuous duty.

4. Operation: Fail open, energize to close unless otherwise indicated.

5. Enclosures: National Electrical Manufacturers' Association (NEMA) psig rated according to area designation as indicated on Drawings.

6. Electrical Characteristics: As indicated on Drawings.

7. End Connections: Screwed.

8. Conduit Connection: Threaded.

B. Materials:

1. Body: Brass or stainless steel.

2. Trim and Spring: Stainless steel.

3. Seals: Resilient, polytetrafluoroethylene (PTFE).

2.4 BLOW-OFF HYDRANT ASSEMBLIES

A. Description:

1. Material: 100 percent low-lead brass.

2. Inlet: 2-inch diameter female iron pipe (FIP) vertical straight inlet.

3. Outlet: 2-inch diameter male iron pipe (MIP).

4. Operation:

a. By turning a top-mounted square operating nut.

b. Operation must seal drain outlet in all positions from 1/4-open to fully open.

5. Hydrant shall be non-freezing, self-draining.

6. Accessories: Provide Owner with one operating wrench.

B. Manufacturers:

1. Kupferle – Truflo #TF500 or equal.

2.5 FLAP VALVES

A. Description:

1. Material: ASTM A126, cast iron.

2. Seat and hinge pin: Bronze.

3. End connection: 125-pound flange, unless otherwise noted on the Drawings.

4. Two pivot points.

5. Valves 14-inches and smaller shall have the hinge pin secured with cotter pins.

6. Valves 16-inches and larger shall have the hinge pin secured with nuts.

B. Manufacturers:

1. M & H, Style 47 or equal.

2.6 SOURCE QUALITY CONTROL

A. Testing Pressure-Reducing and Pressure-Sustaining Valves:

1. Leakage Testing:

a. Test each assembled valve hydrostatically at 1-1/2 times rated working pressure for minimum five minutes.

b. Test each valve for leakage at rated working pressure against closed valve.

c. Permitted Leakage: None.

2. Functional Testing:

a. Test each valve to verify specified performance.

PART 3 EXECUTION

3.1 INSTALLATION

A. Install valves per Manufacturer requirements and recommendations.

B. Install all valves with valve seats level.

C. Install protective strainers upstream of solenoid valves, pressure-reducing valves, and pressure-sustaining valves.

3.2 ATTACHMENTS – NOT USED

END OF SECTION

SECTION 43 41 43.2 – DOUBLE WALL POLYETHYLENE TANKS

PART 1 GENERAL

1.1 REQUIREMENTS

A. The Contractor shall provide, in accordance with the Contract Documents, double wall high density cross-linked polyethylene tanks and accessories per Part 2, PRODUCTS, complete and in place, in accordance with the Contract Documents.

B. Unit Responsibility: The Contractor shall be responsible for furnishing the double wall tank(s) and the accessories defined herein for chemical storage as indicated.

1.2 REFERENCES, CODES, AND STANDARDS

A. American Society of Testing Materials (ASTM).

1. D638 Tensile Properties of Plastics
2. D883 Standard Definitions of Terms Relating to Plastics
3. D1505 Density of Plastics by the Density-Gradient Technique
4. D1525 Test Method for Vicat Softening Temperature of Plastics
5. D1693 ESCR Specification Thickness 0.125" F50-10%
6. F412 Standard Terminology Relating to Plastic Piping Systems

B. ANSI Standards: B-16.5, Pipe Flanges and Flanged Fittings

C. Building Code: International Building Code, IBC, 2018

D. ARM: Low Temperature Impact Resistance (Falling Dart Test Procedure)

E. NSF/ANSI Standard 61, AWWA – Drinking Water System Components

F. ASTM D-1998, Standard Specification for Polyethylene Upright Storage Tanks

1.3 SUBMITTALS

A. Shop Drawings: Shop drawings shall be approved by Engineer and COMPANY prior to the manufacturing of the double wall tanks. Submit the following as a single, complete initial submittal.

Sufficient data to show that the product conforms to the requirements of this specification and the Drawing. Provide the following additional information:

1. Double wall tank and Fitting Material
   a. Resin Manufacturer Data Sheet
   b. Fitting Material

c. Gasket style and material

d. Bolt material

e. Details of level indication gages

f. Details of the seismic restraint system

2. Dimensioned Tank Drawings

a. Location and orientation of openings, fittings, accessories, restraints and supports, demonstrating compliance with the locations shown on the Drawing.

b. Details of manways, flexible connections, and vents.

3. Calculations shall be stamped and signed by a Structural Engineer registered in the State of Arizona.

a. Tank restraint system. Show seismic and wind criteria.

B. Manufacturer’s warranty.

C. Manufacturer's unloading procedure.

D. Manufacturer's installation instructions..

E. Supporting information on Manufacturer’s Quality Management System.

F. Supporting documentation of Manufacturer’s certification to NSF/ANSI Standard 61 – Drinking Water System Components for Water Treatment Chemicals.

G. Manufacturer’s Qualifications: Submit to Engineer a list of five installations with double wall tanks in the same service as proof of Manufacturer's qualifications.

H. Factory Test Report

1. Wall thickness verification.

2. Fitting placement verification.

3. Visual inspection

4. Impact test

5. Gel test

6. Hydrostatic test

1.4 QUALITY ASSURANCE

A. The Contractor shall supply double wall tanks of high-density, cross-linked polyethylene. Tanks furnished under this Section shall be supplied by a manufacturer who has been regularly engaged in the design and manufacture of chemical storage tanks for a minimum of 10 years.

B. Tanks shall be manufactured from virgin materials.

C. Tanks shall be manufactured from materials certified to NSF/ANSI Standard 61 for chemical storage and submit form from NSF supporting chemical certification.

1.5 WARRANTY

A. The Supplier shall provide the Manufacturer's 5-year, full replacement limited warranty for the specific service application. Prorated warranties are not acceptable.

PART 2 PRODUCTS

2.1 GENERAL

A. Tanks shall be rotationally molded, high density cross-linked polyethylene, double wall, flat bottom tanks. The assembly shall consist of one cylindrical, closed top inner primary tank and one cylindrical, open top containment outer tank. Each tank shall be rotationally molded, one piece and of seamless construction. The tanks shall be designed for above-ground, vertical installation and shall be designed to store the specified chemicals at atmospheric pressures. Tanks assemblies shall be designed to prevent rainwater, washdown water and debris from entering the containment tank. Tanks shall be adequately vented. The ancillary mechanical fittings and accessories specified herein shall be provided by the Tank Manufacturer. Tanks shall be marked to identify the Manufacturer and date of manufacture. The serial number for each tank shall be permanently embossed into the tank.

2.2 MANUFACTURER

A. Tanks shall be manufactured by Poly Processing Company or equal.

2.3 POLYETHYLENE STOAGE TANKS

A. Service: Chemical storage tanks shall be suited for the following operating conditions:

1. Tank 1: Sodium Hypochlorite, up to 15 percent by weight, with excess sodium hydroxide up to 5 percent by weight for stability.

2. Tank 2: Sodium Hypochlorite, up to 15 percent by weight, with excess sodium hydroxide up to 5 percent by weight for stability.

3. Tank 3: Aluminum Chlorohydrate, up to 50 percent, by weight.

4. Tank 4: Acetic Acid.

5. Tank 5: Phosphoric Acid.

6. Tank 6: Ferric Chloride.

7. All tanks:

a. Specific gravity 1.9.

b. Temperature range: 40 degrees Fahrenheit to 105 degrees Fahrenheit

c. Mechanical fill.

B. High Density Cross-linked Polyethylene resin used in the tank manufacture shall be Poly CL™ or equal and shall contain ultraviolet stabilizer as recommended by the Resin Manufacturer. Where black tanks are indicated, the resin shall have a carbon black compounded into it. The tank material shall be rotationally molded.

C. For oxidizing chemical storage, tank resin shall include an antioxidant polyethylene system that provides a minimum of four times the antioxidant properties of standard polyethylene resins. The antioxidant polyethylene system shall be located on the interior of the tank covering all wetted surfaces. It shall be bonded to the exterior, cross-linked polyethylene system that provides the tank structural qualities during the rotational molding process to ensure a seamless bond between the cross-linked polyethylene outer system and the antioxidant inner system. Antioxidant polyethylene system shall be OR-1000 as manufactured by Poly Processing Company or equal.

D. Wall thickness for a given hoop stress shall be calculated in accordance with ASTM D 1998. Under no conditions shall the tank thickness be less than design requirements of ASTM D 1998.

1. The wall thickness of any cylindrical portion at any fluid level shall be determined by the following equation:

   $T = P \times OD/2SD$ or $0.433 \times SG \times H \times OD/2SD$

   Where:
   T = wall thickness; in
   P = pressure; psi
   SG = specific gravity; grams/cubic centimeter
   H = fluid head; ft
   OD = outside diameter; ft
   SD = hydrostatic design stress

   a. The minimum wall thickness shall be sufficient to support its own weight in an upright position without external support but shall not be less than 0.187” thick.

   b. The hydrostatic design stress shall be derated for service above 100 degrees Fahrenheit and for mechanical loading of the tank.

   c. The minimum design specific gravity shall be 1.9.

2. On closed top tanks, the top head shall be integrally molded with the cylindrical wall. The minimum top head thickness shall be equal to the thickness of the top of the straight sidewall. Flat areas shall be provided for attachment of large fittings on the dome of the tank, as shown on the Drawing.

3. The bottom head shall be integrally molded with the cylindrical wall. Knuckle radius shall be a minimum of 1-inch for tank diameters less than or equal to 6 feet and 1.5-inches for tank diameters greater than 6 feet.

4. Lifting lugs shall be provided and the lugs shall be designed for lifting the tank when empty.

5. Unless otherwise indicated, tanks shall have a manway cover 17-inches in diameter made of polyethylene material with a coarse thread. Gaskets shall be closed cell, cross-linked polyethylene foam, viton or EPDM materials.

6. NOTE: Tanks must be vented to allow for performance at atmospheric pressure, in accordance with the following matrix:

Venting Requirements For Polyethylene Tanks									
Mechanical Pump Fill	**Pneumatic Fill**								
IF ≤ 1000 gallons	**IF** - Vent length ≤ 3 feet			**IF -** Vent length > 3' and ≤ 30'			**IF** - Scrubber Application		
Vent size should equal size of largest fill or discharge fitting	**AND - Vent** screen mesh size ≥ 1/4" or no screen used			**AND -** 3 or less 90° elbows with no other restrictions or reduction in pipe size			**Vent pipe size throughout scrubber system CANNOT be reduced!** Centerline of dispersion pipe not to be submersed > 6 inches		
IF > 1000 gallons	**Emergency Pressure Relief Cover Required**			**Emergency Pressure Relief Cover Required**			Perforated dispersion pipe must be same diameter or larger, as vent. Sum of perforations ≥ cross sectional area of pipe		
Vent size should exceed the largest fill or discharge fitting by 1 inch	Tanker Discharge	Inlet/Fitting Size	Minimum Vent Size	Tanker Discharge	Inlet/Fitting Size	Minimum Vent Size	Tanker Discharge	Inlet/Fitting Size	Minimum Vent Size
	2"	2"	4"	2"	2"	6"	2"	2"	6"
	3"	2"	6"	3"	2"	6"	3"	2"	8"
	3"	3"	6"	3"	3"	8"	3"	3"	10"

(2) 2 inch vents **DO NOT EQUAL** 4 inch venting capacity rev. Nov 2006
For detailed venting guidelines, please visit our Technical Resources at www.polyprocessing.com

E. Tank colors shall be natural, un-pigmented polyethylene.

2.4 TANK ACCESSORIES

A. Restraint System:

1. Metal components shall be galvanized or stainless steel with edge softeners, and tension ring with stainless steel cables and clamps.

2. Tank restraint system shall be supplied by the Tank Manufacturer.

3. Seismic restraint shall be designed by a Structural Engineer registered in the State of Arizona. Design shall conform to the most recent edition of the IBC code for seismic load.

4. Anchor bolts as required by the calculations shall be supplied by the Tank Manufacturer.

B. Fittings: Each tank shall have the following fittings. Fitting locations shall be as shown on the Drawing.

1. 2-inch fill connection with interior drop pipe

2. 4-inch connection for vent pipe

3. 2-inch bolted, one-piece sidewall fitting on the interior tank wall with siphon leg inside the main tank to fully utilize tank storage volume and bellows style transitional fitting on exterior tank wall for secondary containment of chemical

4. 2-inch bulkhead fitting on a vertical face for overflow pipe

5. 2-inch universal ball dome bulkhead fitting for vertical installation of a non-contacting level sensor

6. Reverse level gauge

7. 1-inch bulkhead fitting penetrating only the exterior tank wall for installation of leak monitoring.

2.5 TANKS

1. Tank Schedule: refer to the Drawings.

2. Note that approximate overall height is measured along the straight cylindrical portion of the tank. Maximum height is from the outside base of the tank to the dome top or the threaded cap on the dome, whichever is higher.

B. Fittings

1. Tank fittings for each tank shall be in accordance with the Drawing. Threaded fittings shall use American Standard Pipe Threads.

2. Bolted flange fittings shall be constructed of one 150 lb. flange with ANSI bolt pattern, one flange gasket and stud bolts with gaskets. Stud bolts shall have chemical resistant polyethylene injection molded heads and gaskets to provide a sealing surface between the bolt head and the interior tank wall. Stud bolt heads shall be color coded, according to the following schedule, for ease of visual identification.

   a. Green for 316 Stainless Steel,

   b. Black for Titanium,

   c. Red for Alloy C-276,

   d. Blue for Monel.

3. All materials shall be compatible with chemical service and as indicated in the fitting schedule above. For NSF/ANSI 61 certification, EPDM or Viton GF gaskets shall be supplied.

4. For sodium hypochlorite storage, Bolted One-Piece Sure Seal (B.O.S.S.), double flange fittings constructed of virgin polyethylene shall be supplied. Bolts shall be welded to a common backing ring and encapsulated with polyethylene to prevent fluid contact with the metal material. Flanges will have one full face gasket to provide a sealing surface against inside tank wall. All materials shall be compatible with chemical service and as indicated in the fitting schedule above. For NSF/ANSI 61 certification, EPDM or Viton GF gaskets shall be supplied.

5. Down Pipes and Fill Pipes: Down pipes and fill pipes shall be supported at intervals of no more than 6-feet. Down pipes and fill pipes shall be PVC or other material compatible with the chemical stored.

6. Tank Vents: Each tank shall be vented for the material and for the anticipated flow and withdrawal rates.

7. For dual wall tank greater than 1000 gallons, bottom fittings shall be designed to maintain 110% secondary containment integrity. Bottom containment fitting must include a PTFE

expansion joint designed to accommodate movement of the primary tank in design accordance with ASTM-D 1998 tolerances. All secondary containment fittings and parts shall be resistant to chemical fume corrosion. Fitting shall include the option to connect a secondary containment pipe over primary pipe.

8. Expansion joints shall meet the following minimum performance requirements:

   a. Axial Compression ≥ 0.67”

   b. Axial Extension ≥ 0.67”

   c. Lateral Deflection ≥ 0.51”

   d. Angular Deflection ≥ 14º

   e. Torsional Rotation ≥ 4º

2.6 LEVEL INDICATION – REVERSE LEVEL GAUGE

A. Float Indication: The level indicator shall be assembled to the tank and shall consist of PVC float, indicator, polypropylene rope, perforated interior pipe, PVC roller guides, clear UV resistant PVC sight tube (EnviroKing® as manufactured by C.F. Harvel, or equal), and all necessary pipe supports.

   1. The level indicator shall act inversely to the tank contents. It shall not allow entrance of tank contents into the sight tube at any time.

B. Ultrasonic Level Indicator: The ultrasonic level indicator shall be a Flowline ultrasonic level transmitter, level controller with one 4-20 mA or 0-10 VDC continuous level input and NEMA 4X box to be supplied by Tank Manufacturer.

2.7 FACTORY TESTING

A. Material Testing

   1. Perform gel and low temperature impact tests in accordance with ASTM D 1998 on condition samples cut from each polyethylene chemical storage tank.

   2. Degree of Crosslinking. Use Method C of ASTM D 1998- Section11.4 to determine the ortho-xylene insoluble fraction of cross-linked polyethylene gel test. Samples shall test at no less than 60 percent.

B. Tank Testing

   1. Dimensions: Take exterior dimensions with the tank empty, in the vertical position. Outside diameter tolerance, including out-of-roundness, shall be per ASTM D 1998. Fitting placement tolerance shall be +/- 1/2-in vertical and +/- 1 degree radial.

   2. Visual: Inspect for foreign inclusions, air bubbles, pimples, crazing, cracking, and delamination.

3. Hydrostatic test: Following fabrication, the bottom tanks, including inlet and outlet fittings, shall be hydraulically tested with water by filling to the top sidewall for a minimum of 1 hour and inspected for leaks. Following successful testing, the tank shall be emptied and cleaned prior to shipment.

PART 3 EXECUTION

3.1 DELIVERY, STORAGE, AND HANDLING

A. The tank shall be shipped upright or lying down on their sides with blocks and slings to keep them from moving. Sharp objects on trailers shall be avoided.

B. All fittings shall be installed at the factory to confirm proper installation. All fittings that the Manufacturer recommends be shipped separately shall be removed for shipping. Manufacturer's instructions for reinstallation of removed fittings shall be provided with the tanks and accessories.

C. Upon arrival at the destination, Engineer shall inspect the tanks and accessories for damage in transit. If damage has occurred, Engineer shall immediately notify Manufacturer.

3.2 INSTALLATION

A. Manufacturer shall provide detailed instructions for tank installation.

B. Manufacturer shall provide a check list for review of the installed tanks by COMPANY and Contractor prior to Manufacturer's review of the installed tank systems.

C. After COMPANY's Contractor has installed the tanks, Manufacturer shall inspect installed tanks to verify proper installation of flexible outlet and drain connections, venting pipe connections, fill pipe connections, overflow, reverse level gauge and other fittings.

D. Manufacturer shall provide a minimum 1-hour training session to instruct COMPANY's operators on servicing and maintaining the tank system. Included in the training session will be three complete sets of training manuals.

E. Manufacturer's trained, certified technician shall conduct an onsite inspection of the completed installation. Inspection will verify chemical application, plumbing connections, venting, and applicable ancillary equipment such restraints. Manufacturer shall supply COMPANY with a certificate verifying proper installation when equipment has passed the installation checklist.

F. Tank manuals will consist of installation check lists, record tank drawings, fitting drawings referencing nozzle schedule on tank drawing, materials of construction, and recommended maintenance program.

END OF SECTION

SECTION 43 21 00 - LIQUID PUMPS GENERAL

1.1 SUMMARY

A. The provisions of this Section shall apply to all pumps and pumping equipment except where otherwise indicated.

B. Where two or more pump systems of the same type or size are required, all pumps shall all be produced by the same Manufacturer.

Provide all labor, equipment and materials and perform all operations in connection with the installation and testing of pumps.

Coordinate and utilize all factory testing, installation, start-up, and field-testing services supplied in conjunction with the pumping equipment.

C. All work performed under this Section shall be in accordance with all approved trade practices and Manufacturer's recommendations.

D. Section includes:

1. General pump material, components and appurtenances for liquid pumps.
2. Quality control factory and field testing.

1.2 REFERENCE STANDARDS

A. American Society of Mechanical Engineers (ASME):

1. ASME B1.20.1 - Pipe Threads, General Purpose (Inch).

2. ASME B16.1 - Gray Iron Pipe Flanges and Flanged Fittings: Classes 25, 125, and 250.

3. ASME B16.5 - Pipe Flanges and Flanged Fittings: NPS 1/2 through NPS 24 Metric/Inch Standard.

B. NSF International:

1. NSF 61 - Drinking Water System Components - Health Effects.

2. NSF 372 - Drinking Water System Components - Lead Content.

3. NSF 600 - Health Effects Evaluation and Criteria for Chemicals in Drinking Water.

1.3 COORDINATION

A. Section 01 30 00, Administrative Requirements: Requirements for coordination.

B. Coordinate Work of this Section with location and placement of utilities and piping.

1.4 SUBMITTALS

A. Submit in accordance with Section 01 33 00, Submittal Procedures: Requirements for submittals.

B. Shop Drawings: Provide the following information:

1. Pump name, identification number, and applicable Section number from Project specifications.

2. Performance Data Curves:

   a. Provide performance curve showing head, capacity, horsepower demand, net positive suction head (NPSH) required and pump efficiency over the entire operating range of the pump.

   b. Pump Manufacturer shall indicate separately the head, capacity, horsepower demand, overall efficiency, and minimum submergence required at the design flow conditions and the maximum and minimum flow conditions.

   c. A family of performance curves at intervals of 100 revolutions per minute (rpm) from minimum speed to maximum speed shall be provided for each pump equipped with a variable speed drive, and a curve for each speed on two-speed pumps.

3. The limits on the performance curves recommended for stable operation without surge, cavitation, or excessive vibration, known as the Acceptable Operating Range (AOR), per the Hydraulic Institute.

4. Assembly and Installation Drawings: Including shaft size, seal, coupling, bearings, anchor bolt plan, part nomenclature, material list, outline dimensions, and shipping weights.

C. All pump motor information as required in Division 26, including complete motor nameplate data as defined by NEMA, motor manufacturer and any motor modifications.

D. Head lateral analysis as specified herein and where required by individual pump sections.

E. Provide lateral and torsional analysis as specified herein and where required by individual pump specifications.

F. Operation and Maintenance Manual: Containing the required information for each pump section.

G. Spare Parts List: Containing the required information for each pump section.

H. Factory Test Data: Signed, dated, and certified for each pump system which requires factory testing submitted before shipment of equipment. Requirements for factory test data are specified below.

I. Certifications:

1. Manufacturer's certification of proper installation.

2. Contractor's certification of satisfactory field testing.

J. All pump motor information as required in Divisions 26 and 43.

K. Qualifications Statements:

1. Submit qualifications for Manufacturer.

2. Submit Manufacturer's approval of installer.

L. Certificate of Compliance:

1. Submit certificate of compliance indicating Work performed at fabricator's facility conforms to Contract Documents.

1.5 MAINTENANCE MATERIAL SUBMITTALS

A. See Section 01 78 23, Operation and Maintenance Data for requirements.

1.6 QUALITY ASSURANCE

A. Materials in Contact with Potable Water: Certified to NSF Standards 61 and 372.

B. Perform Work according to COMPANY standards.

1.7 QUALIFICATIONS

A. Manufacturer: Company specializing in manufacturing products specified in this Section with minimum three years' documented experience.

B. Installer: Company specializing in performing Work of this Section with approval by Manufacturer.

1.8 DELIVERY, STORAGE, AND HANDLING

A. Section 01 60 00 - Product Requirements: Requirements for transporting, handling, storing, and protecting products.

B. Inspection: Accept materials on Site in Manufacturer's original packaging and inspect for damage.

C. Store materials according to Manufacturer instructions.

D. Protection:

1. Protect materials from moisture and dust by storing in clean, dry location remote from construction operations areas.

2. Provide additional protection according to Manufacturer instructions.

1.9 EXISTING CONDITIONS

A. Field Measurements:

1. Verify field measurements prior to fabrication.

2. Indicate field measurements on Shop Drawings.

1.10 WARRANTY

A. Section 01 70 00 - Execution and Closeout Requirements: Requirements for warranties.

B. Furnish Manufacturer's warranty for pumping systems of no less than 24 months from the date of installation or 30 months from the date of manufacture .

PART 2 PRODUCTS

2.1 GENERAL

A. Materials and equipment shall be standard products of a manufacturer and distributor regularly engaged in the manufacture and distribution of such products for at least 2 years and shall be suitable for the service intended.

B. All materials and equipment shall be new and unused except for the testing specified herein.

C. Compliance with the requirements of the individual pump sections may necessitate modifications to the Manufacturer’s standard equipment.

D. All centrifugal pumps shall have a continuously rising performance curve. In no case shall the required horsepower at any point on the performance curve exceed the rated horsepower of the motor or engine or encroach on the service factor.

E. All components of each pump system provided under the pump sections shall be entirely compatible. Each unit of pumping equipment shall incorporate all basic mechanisms, couplings, electric motors or engine drives, variable speed controls, necessary mountings, and appurtenances.

F. The pumps shall be supplied by a distributor authorized to service them throughout the warranty period and beyond. The distributor shall be located within a 100-mile radius of the site.

G. The pumps shall be warranted by the Manufacturer for a minimum of 1-year from the date of installation.

H. All materials and coatings coming in contact with potable water shall be ANSI/NSF Standard 61 approved.

I. The pumping units shall all be supplied by one vendor (unit responsibility) and shall be complete including pumps, motors, column assemblies, suction cans, baseplates, couplings, guards, and other accessories.

J. The complete pump assembly shall be designed and built for continuous service at any and all points within the specified range of operation, without overheating, without damaging cavitation, and without excessive vibration or noise.

2.2 MATERIALS

A. All materials shall be suitable for the intended application; materials not specified shall be high-grade, standard commercial quality, free from all defects and imperfection that might affect

the serviceability of the product for the purpose for which it is intended, and shall conform to the following requirements:

1. Cast iron pump casings and bowls shall be of close-grained gray cast iron, conforming to ASTM A 48 - Gray Iron Casings, Class 30, or equal.

2. Stainless steel pump shafts shall be Type 416 or 316.

3. Miscellaneous stainless steel shall be of Type 316, except in a septic environment.

4. Anchor bolts, washers, and nuts supplied by the Contractor for non-corrosive applications shall be galvanized steel in accordance with the requirements of Section 05 50 00, Metal Fabrications. Anchor bolts, washers, and nuts in corrosive service applications shall be stainless steel in accordance with that Section.

2.3 PUMP COMPONENTS, GENERAL

A. Flanges: Suction and discharge flanges shall conform to ANSI/ASME B16.1 - Cast Iron Pipe Flanges and Flanged Fittings, Class 12, 125, 250, and 800 or B16.5 - Flanges and Flanged Fittings dimensions.

B. Handholes: Handholes on pump casings shall be shaped to follow the contours of the casing to avoid any obstructions in the water passage.

2.4 PUMP APPURTENANCES

A. Nameplates: Each pump shall be equipped with a stainless steel nameplate indicating serial numbers, rated head and flow, impeller size, pump speed, and Manufacturer's name and model number.

B. Gauges: Provide and install pressure gauges as shown on the Drawings.

1. All pumps (except sample pumps, sump pumps, hot water circulating pumps, and chemical metering pumps) shall be equipped with pressure gauges on the pump discharge.

2. Pump suction lines shall be provided with compound gauges.

3. Gauges shall be located in a representative location, where not subject to shock or vibrations, in order to achieve true and accurate readings.

4. Isolation diaphragms shall be provided for all gauges except where pumping potable water.

5. Where subject to shock or vibrations, the gauges shall be wall-mounted or attached to galvanized channel floor stands and connected by means of flexible connectors.

2.5 FINISHES

A. As specified in Section 09 90 00, Painting and Coating.

2.6 SOURCE QUALITY CONTROL

A. Factory Testing:

1.

2. For motors smaller than 100 hp, the Manufacturer's certified test motor shall be acceptable. For motors larger than 100 hp, tests shall be performed using the complete pump system to be furnished, including the motor. The following minimum test data shall be submitted:

   a. Hydrostatic test data.

   b. A minimum of five hydraulic test readings between shutoff head and 25 percent beyond the maximum indicated capacity, recorded on data sheets as defined by the Hydraulic Institute.

   c. Pump test data curves showing head, flowrate, bhp, and efficiency. Acceptance level shall be Grade 1U as defined by ANSI/HI 14.6.

   d. Certification that the pump horsepower demand did not exceed the rated motor hp beyond the 1.0 service rating at any point on the curve.

   e. Mechanical test data per ANSI/HI 14.6 Appendix E, including testing for vibration, lack of leakage at shaft seals, gaskets and other lubricated areas, and satisfactory operation of rotating parts at the rated pump operating conditions.

   f. Vibration test results meeting ANSI/HI 9.6.4 requirements.

3. Factory Witnessed Tests: Factory witnessed testing for this Project not required.

4. Acceptance: In the event of failure of any pump to meet any of the requirements, the Contractor and Pump Manufacturer shall make all necessary modifications, repairs, or replacements to conform to the requirements of the Contract Documents and the pump shall be retested at no additional cost to COMPANY until found satisfactory.

B. Drive Units:

1. Test electric drive motors as specified in Divisions 26 and 43.

2. Test variable-frequency drives as specified in Division 26.

3. Perform tests using complete pump system to be furnished, including Project motor and variable-frequency drive, if specified above.

4. Furnish test results to Pump Manufacturer prior to pump testing.

C. Do not ship equipment until test data have been accepted by Engineer.

PART 3 EXECUTION

3.1 SERVICES OF PUMP MANUFACTURER

A. An authorized service representative of the Manufacturer shall visit the Site to witness the following and to certify in writing that the equipment and controls have been properly installed, aligned, lubricated, adjusted, and readied for operation:

1. Installation of the equipment.
2. Inspection, checking, and adjusting the equipment.
3. Startup and field testing for proper operation.
4. Performing field adjustments to ensure that the equipment installation and operation comply with requirements.
5. Requirements are more specifically detailed herein and in individual pump specifications.

B. Instruction of the COMPANY's Personnel:

1. An authorized training representative of the Manufacturer shall visit the Site to instruct COMPANY's personnel in the operation and maintenance of the equipment, including step-by-step troubleshooting with necessary test equipment.
2. Instruction shall be specific to the models of equipment provided.
3. The Pump Manufacturer's representative shall have at least 2 years' experience in training.
4. Training shall be scheduled a minimum of 3 weeks in advance of the first session.
5. Proposed training material and a detailed outline of each lesson shall be submitted for review. Comments shall be incorporated into the material.
6. The training materials shall remain with the trainees.
7. COMPANY may videotape the training for later use with COMPANY's personnel.

3.2 EXAMINATION

A. Section 01 70 00, Execution and Closeout Requirements: Requirements for installation examination.

B. Verify that designated areas, clearances, structural requirements, piping, utility connections, and electronic signals are ready to receive equipment.

3.3 PREPARATION

A. Section 01 70 00, Execution and Closeout Requirements: Requirements for installation preparation.

B. Disconnect electrical systems scheduled for removal.

C. Provide temporary wiring and connections to maintain existing systems in service during construction.

D. Remove, relocate, and extend existing installations as necessary to accommodate new construction.

3.4 INSTALLATION

A. General: Pumping equipment shall be installed in accordance with the Manufacturer's written recommendations.

B. Alignment:

1. All equipment shall be field tested to verify proper alignment, operation as specified, and freedom from binding, scraping, vibration, shaft runout, or other defects.

2. Pump drive shafts shall be measured just prior to assembly to ensure correct alignment without forcing.

3. Equipment shall be secure in position and neat in appearance.

C. Equipment Bases and Supports:

1. Provide pump bases as shown on Drawings.

2. Install anchor bolts and accessories for mounting and anchoring equipment.

D. Provide rigid anchors for pipes after vibration isolation components are installed, as specified in Section 43 05 48, Vibration and Seismic Controls for Process Gas and Liquid Handling Equipment.

E. Lubricants: Provide the necessary lubricants for initial operation, as required by individual pump sections or as recommended by the Manufacturer.

3.5 FIELD TESTS

A. Engineer shall be notified of witness field testing and shall witness portions of the testing, as determined by the Engineer.

B. Each pump system shall be field tested after installation to demonstrate satisfactory operation without excessive noise, vibration, cavitation, or overheating of bearings.

C. Test for proper alignment and freedom from binding, scraping, shaft runout, or other defects.

D. Field testing methods and allowable tolerances shall comply with current version of the Hydraulics Institute standards for the type of pumps installed.

E. The following field testing shall be conducted:

1. Startup, check, and operate the pump system over its entire speed range. Where vibration analysis and measurement are required, it shall be within the amplitude limits specified and recommended by the Hydraulic Institute Standards at a minimum of four pumping conditions defined by the Engineer.

2. Obtain concurrent readings of motor voltage, amperage, pump suction head and pump discharge head for at least four pumping conditions at each pump rotational speed. Check each power lead to the motor for proper current balance.

3. Determine bearing temperatures by contact type thermometer. A run time of at least 20 minutes shall precede this test unless insufficient liquid volume is available.

4. Electrical and instrumentation tests shall conform to the requirements of the Section under which that equipment is specified.

5. Sound test not to exceed 83 dbA at 3 feet from motor in any direction.

F. Field testing will be witnessed by the Engineer. The Contractor shall furnish 3 days' advance notice of field testing.

G. Equipment Acceptance:

1. Acceptance shall include a comparison of measured installed pump performance with the Manufacturer's curve values. Any discrepancy shall be resolved prior to acceptance by COMPANY.

2. Adjust, repair, modify, or replace components failing to perform as specified and rerun tests until the performance is verified.

3. Make final adjustments to equipment under direction of Manufacturer's representative.

4. After each pumping system has satisfied the requirements, the Contractor shall certify in writing that it has been satisfactorily tested and that all final adjustments have been made. Certification shall include the date of the field tests, a listing of all persons present during the tests, and the test data.

H. Contractor shall bear all costs of field tests, including additional services of the Manufacturer's representative required beyond those specified.

3.6 DEMONSTRATION

A. Section 01 70 00, Execution and Closeout Requirements: Requirements for demonstration and training.

B. Demonstrate equipment startup, shutdown, routine maintenance, alarm condition responses, and emergency repair procedures to COMPANY's personnel.

END OF SECTION

Page left intentionally blank.

SECTION 43 21 13 - CENTRIFUGAL LIQUID PUMPS

PART 1 GENERAL

1.1 SUMMARY

A. Section Includes:

1. Horizontal end suction pumps.
2. Vertical in-line pumps.
3. Section 40 05 13 - Common Work Results for Process Piping: Execution requirements for piping specified by this Section.

1.2 REFERENCE STANDARDS

A. American Bearing Manufacturers Association:

1. ABMA 9 - Load Ratings and Fatigue Life for Ball Bearings.
2. ABMA 11 - Load Ratings and Fatigue Life for Roller Bearings.

B. American Society of Mechanical Engineers:

1. ASME B16.1 - Gray Iron Pipe Flanges and Flanged Fittings.

C. ASTM International:

1. ASTM A29 - Standard Specification for Steel Bars, Carbon and Alloy, Hot-Wrought, General Requirements for.
2. ASTM A48 - Standard Specification for Gray Iron Castings.
3. ASTM A322 - Standard Specification for Steel Bars, Alloy, Standard Grades.
4. ASTM A532 - Standard Specification for Abrasion-Resistant Cast Irons.
5. ASTM A536 - Standard Specification for Ductile Iron Castings.
6. ASTM A606 - Standard Specification for Steel, Sheet and Strip, High-Strength, Low-Alloy, Hot-Rolled and Cold-Rolled, with Improved Atmospheric Corrosion Resistance.
7. ASTM A743 - Standard Specification for Castings, Iron-Chromium, Iron-Chromium-Nickel, Corrosion Resistant, for General Application.
8. ASTM A744 - Standard Specification for Castings, Iron-Chromium-Nickel, Corrosion Resistant, for Severe Service.
9. ASTM B148 - Standard Specification for Aluminum-Bronze Sand Castings.
10. ASTM B505 - Standard Specification for Copper Alloy Continuous Castings.

1.3 COORDINATION

A. Section 01 30 00 - Administrative Requirements: Requirements for coordination.

B. Coordinate installation and startup of Work of this Section with plant operations..

1.4 SCHEDULING

A. Schedule Work of this Section to install pumps prior to connecting piping work.

1.5 SEQUENCING

A. Section 01 10 00 - Summary: Requirements for sequencing.

B. Sequence Work of this Section to prevent interference with plant operations.

1.6 SUBMITTALS

A. Section 01 33 00 - Submittal Procedures: Requirements for submittals.

B. Product Data: Submit information concerning materials of construction and fabrication.

C. Shop Drawings:

1. Submit detailed dimensions for materials and equipment, including wiring and control diagrams, performance charts and curves, installation and anchoring requirements, fasteners, and other details.

2. Include Manufacturer's specified displacement tolerances for vibration at operational speed specified for pumps.

D. Product Data: Submit information concerning materials of construction and fabrication.

E. Manufacturer's Instructions: Submit detailed instructions on installation requirements, including storage and handling procedures, anchoring, and layout.

F. Source Quality-Control Submittals: Indicate results of factory tests and inspections.

G. Field Quality-Control Submittals: Indicate results of Contractor-furnished tests and inspections.

H. Manufacturer Reports: Indicate that equipment has been installed according to Manufacturer's instructions.

1.7 CLOSEOUT SUBMITTALS

A. Section 01 70 00 - Execution and Closeout Requirements: Requirements for closeout procedures.

B. Project Record Documents: Record actual locations and final orientation of equipment and accessories.

C. Operation and Maintenance Data: Submit maintenance instructions for equipment and accessories.

1.8 WARRANTY

A. Section 01 70 00 - Execution and Closeout Requirements: Requirements for warranties.

B. Furnish Manufacturer's warranty for pumping systems of no less than 24 months from the date of installation or 30 months from the date of manufacture.

PART 2 PRODUCTS

2.1 HORIZONTAL END SUCTION PUMPS

A. Manufacturers:

1. Grundfos

2. Furnish materials according to COMPANY's standards.

B. Performance and Design Criteria:

1. Design Flow Rate: per pump schedule

2. Design Flow Total Dynamic Head: per pump schedule

3. Minimum Flow Rate: per pump schedule

4. Minimum Flow Total Dynamic Head: per pump schedule

5. Maximum Flow Rate: per pump schedule

6. Maximum Flow Total Dynamic Head: per pump schedule

7. NPSH Available: per pump schedule

8. Minimum Efficiency at Design Flow Rate: 70%

9. Service Liquid: water.

10. Specific Gravity: 1

11. Temperature: 50-104 degrees F.

12. Maximum Pump Speed: 3600 rpm.

13. Maximum Motor Speed: 3600 rpm.

C. Pump Casing:

1. Type: Volute.

2. Material: ASTM A536, ductile iron.

3. Connections: Gauge and drain.

4. Furnish backhead to permit removal of impeller, shaft, and bearings without affecting piping.

D. Impeller:

1. Type: Single stage, end suction centrifugal.

2. Material: Bronze.

3. Statically and dynamically balanced after assembly.

E. Pump Shaft:

1. ASTM A29, steel.

2. Couplings: Keyed to shaft.

F. Coupling:

1. Connect pump shaft to drive motor with universal flexible coupling to compensate for minor misalignment and to permit removal of pump-rotating assembly and motor without removing piping.

2. Shaft Guard: Enclose shaft and universal joint with enclosed-type metal shaft guard complying with OSHA Standards.

G. Wearing Rings:

1. Material: ASTM B505, bronze.

H. Bearings:

1. Type: Ball.

I. Seals: Split mechanical.

J. Lubrication: Grease.

K. Base:

1. Heavy cast-iron base with drip rim and drain connection.

2. Pump and Drive Mating Surfaces: Machine finished.

L. Operation:

1. Electrical Characteristics: As specified in Section 26 09 22 - Variable-Frequency Motor Controllers] and as specified in Schedule:

2. Disconnect Switch: Factory mounted in control panel.

3. Operation Sequences: As indicated on Drawings.

2.2 VERTICAL INLINE PUMPS

A. Manufacturers:

1. Grundfos

2. Furnish materials according to COMPANY's standards.

B. Performance and Design Criteria:

1. Design Flow Rate: per pump schedule

2. Design Flow Total Dynamic Head: per pump schedule

3. Minimum Flow Rate: per pump schedule

4. Minimum Flow Total Dynamic Head: per pump schedule

5. Maximum Flow Rate: per pump schedule

6. Maximum Flow Total Dynamic Head: per pump schedule

7. NPSH Available: per pump schedule

8. Minimum Efficiency at Design Flow Rate: 65%

9. Service Liquid: water.

10. Specific Gravity: 1

11. Temperature: 60-70 °F.

12. Maximum Pump Speed: 3600 rpm.

13. Maximum Motor Speed: 3600 rpm.

C. Pump Casing:

1. Material.

2. Volute Type.

3. Connections: Air vent and drain.

4. Flange: ASME B16.1, Class 150.

D. Impeller:

1. Material: ASTM A536, ductile iron.

2. Keyed to pump shaft.

3. Statically and dynamically balanced after assembly.

E. Pump Shaft:

1. Material: ASTM A29, steel.

2. Key couplings to shaft.

3. Furnish shaft wearing sleeve.

F. Coupling:

1. Connect pump shaft to drive motor with universal flexible coupling to compensate for minor misalignment.

2. Shaft Guard: Enclose shaft and universal joint with enclosed-type metal shaft guard complying with OSHA Standards.

G. Wearing Rings:

1. Replaceable.

2. Stainless-steel fasteners.

H. Bearings:

I. Seals: Split mechanical.

J. Lubrication: Grease.

K. Base:

1. Heavy cast-iron base with drip rim and drain connection.

2. Pump and Drive Mating Surfaces: Machine finished.

L. Operation:

1. Electrical Characteristics: As specified in Section 26 09 22 - Variable-Frequency Motor Controllers and as specified in Schedule:

2. Disconnect Switch: Factory mounted in control panel.

3. Operation Sequences: As indicated on Drawings.

PART 3 EXECUTION

3.1 INSTALLATION

A. Install pumps where indicated on Drawings and in accordance with Manufacturer's instructions.

B. Provide and connect piping, power, and control conduit, and wiring to make system operational and ready for startup.

C. Flush piping with clean water.

D. Installation Standards: Install Work according to COMPANY standards.

3.2 FIELD QUALITY CONTROL

A. Section 01 40 00 - Quality Requirements: Requirements for inspecting and testing.

B. Section 01 70 00 - Execution and Closeout Requirements: Requirements for testing, adjusting, and balancing.

C. Pre-operational Check: Before operating system or components, perform the following:

1. Check pump and motor alignment.

2. Check for proper motor rotation.

3. Check pump and drive units for proper lubrication.

D. Startup and Performance Testing:

1. Operate pump on clear water at design point for continuous period of two hours, under supervision of Manufacturer's representative and in presence of Architect/Engineer.

E. Verify pump performance by performing time-drawdown test or time-fill test.

F. Check pump and motor for high bearing temperature and excessive vibration in accordance with the Manufacturer's recommendations. Check for motor overload by taking ampere readings.

G. Equipment Acceptance:

1. Adjust, repair, modify, or replace system components that fail to perform as specified, and rerun tests. Make final adjustments to equipment under direction of Manufacturer's representative.

3.3 ATTACHMENTS

A. Pump Schedule:

PUMP DESCRIPTION	TYPE OF PUMP	CAPACITY (GPM)	DISCHARGE HEAD/TDH (FT)	MAX. SPEED (RPM)	MAX. MOTOR SIZE			VFD
					HP	VOLT	PHASE	
Sludge Pump 1, PMP-503	Vertical non-clog	100	10.2	3600	1			no
IPS Pump 1, PMP-301	Horizontal end suction	276	150	3600	20			yes
IPS Pump 2, PMP-302	Horizontal end suction	276	150	3600	20			yes

Backwash Recycle Pump 1, PMP-501	Horizontal end suction	23	104	3600	5			no
Backwash Recycle Pump 2, PMP-502	Horizontal end suction	23	104	3600	5			no

END OF SECTION

SECTION 43 21 44 - SUBMERSIBLE LIQUID PUMPS

PART 1 GENERAL

1.1 SUMMARY

A. This Section includes furnishing, start-up, testing, and operation training for submersible water residual pumps.

B. Section includes:

1. Submersible sump pumps.

1.2 REFERENCE STANDARDS

A. ASTM International:

1. ASTM A48 - Standard Specification for Gray Iron Castings.

2. ASTM A276 - Standard Specification for Stainless Steel Bars and Shapes.

B. National Electrical Manufacturers Association:

1. NEMA 250 - Enclosures for Electrical Equipment (1000 Volts Maximum).

C. NSF International:

1. NSF 61 - Drinking Water System Components - Health Effects.

2. NSF 372 - Drinking Water System Components - Lead Content.

3. NSF 600 - Health Effects Evaluation and Criteria for Chemicals in Drinking Water.

1.3 SUBMITTALS

A. Per the requirements of Section 43 21 00, Liquid Pumps General.

B. Applicable material certifications and testing certificates.

1.4 CLOSEOUT SUBMITTALS

A. Project Record Documents: Record actual locations and final orientation of equipment and accessories.

B. Pump Supplier: Manufacturer's installation and operation certificate. Statement that the equipment is suitable for the intended use.

1.5 FACTORY TESTING

A. Pump Manufacturer shall provide the following factory tests in accordance with Section 43 21 00, Liquid Pumps General:

1. Performance test.

2. Hydrostatic test.

3. Submersible motor integrity test.

1.6 COORDINATION

A. Like items of equipment specified herein shall be the end product of one manufacturer.

B. Electrical controls and motor design requirements are specified in this Section and Division 26, Electrical.

C. Coordinate pump requirements with the Pump Drive Manufacturer. Contractor shall be responsible for the overall pump and drive performance.

1.7 WARRANTY

A. Submersible pumps shall be warranted by the Manufacturer for a minimum of two (2) years from the date of installation.

PART 2 PRODUCTS

2.1 DESCRIPTION

A. Manufacturers:

1. BJM

2. Grundfos

3. Xylem

4. Or equal

B. Identification:

Location	DEWATERING PUMPS
PUMP LABEL(S)	PMP-505, PMP-506
Quantity	2

C. Power and Motor Requirements:

Voltage	480
PHASE	3
Frequency	60 HZ
Max. Motor Speed	3,600RPM
Max. Motor Horsepower	5 HP

D. Performance Requirements at Full Pump Speed, One Pump Running

Duty Point 1 Minimum Flow Capacity	100 gpm
Duty Point 1 Total Dynamic Head	47 feet
Duty Point 1 Minimum Pump Efficiency	50%
Maximum NPSH required at Duty Point 1	xx feet

E. Operating Conditions:

Duty	CONTINUOUS
Drive	SOFT START
Ambient Environment	WET WELL
Ambient Temperature	40° - 110° F
Fluid Service	BACKWASH WASTE FROM MUNICIPAL DRINKING WATER, UNSCREENED, CONTAINING DISSOLVED AND UNDESOLVED IRON AND ARSENIC.
Minimum Solids Passing Capability	3/8-INCH SOLID
Fluid Temperature	50° - 90° F
Fluid pH Range	6.0 TO 8.0
Fluid Specific Gravity	1.0
Net Positive Suction Head Available	[XX FEET]

F. Pumping System Dimensions:

Minimum Pump Discharge Size	[2-INCH]
Base Elbow Discharge Size	[X-INCH]
Discharge Flange Rating (ANSI)	CLASS 125
Minimum Submersible Cable Length	[AS REQUIRED]

2.2 PUMP CONSTRUCTION

A. Pump, General:

1. Heavy-duty, vertical, submersible pump with integral drive motor, single suction, centrifugal, suitable for a permanent-type wet well installation.

2. Major pump components shall be of gray cast iron, ASTM A48, Class 35B, with smooth surfaces devoid of blow holes or other casting irregularities.

3. All exposed nuts or bolts shall be AISI type 304 stainless steel.

4. All metal surfaces in contact with the pumped media, other than stainless steel, shall be protected by a factory applied spray coating of acrylic dispersion zinc phosphate primer with a polyester resin paint finish on the exterior of the pump.

B. Impeller:

1. ASTM A-532 (Alloy III A), 25% chrome cast iron, dynamically balanced, semi-open, multi-vane, back-swept, non-clog design.

2. Vane leading edges shall be mechanically self-cleaned upon each rotation as they pass across spiral grooves located on the volute suction, which shall keep them clear of debris, maintaining an unobstructed impeller leading edge and sustaining a high level of hydraulic efficiency.

3. Screw-shaped leading edges of the gray-iron impeller shall be hardened to Rc 45 and shall be capable of handling solids, fibrous materials, heavy sludge, and other matter normally found in water treatment residuals.

4. Impeller shall be locked to the shaft, held by an impeller bolt, and treated with a corrosion inhibitor.

C. Volute:

1. Single piece gray cast iron, ASTM A-48, Class 35B, non-concentric design with smooth passages of sufficient size to pass any solids that may enter the impeller.

2. Minimum inlet and discharge size shall be as specified.

3. The volute shall have a replaceable suction cover insert ring in which are cast spiral-shaped, sharp-edged groove(s).

4. The spiral groove(s) shall provide trash release pathways and sharp edge(s) across which each impeller vane leading edge shall cross during rotation so to remain unobstructed.

5. The insert ring shall be cast of ASTM A-532 (Alloy III A), 25% chrome cast iron and provide effective sealing between the multi-vane semi-open impeller and the volute housing.

D. Shaft:

1. Pump and motor shaft shall be a solid continuous shaft.

2. The pump shaft shall be an extension of the motor shaft.

3. Couplings will not be acceptable.

4. The pump shaft shall be stainless steel ASTM A479 S43100-T.

5. The shaft shall be adequately designed to endure alternating bending stresses and to provide for minimum overhang to reduce shaft deflection and prolong bearing life.

E. Bearings:

1. The pump shaft shall rotate on at least three grease-lubricated bearings.

2. The upper bearing, provided for radial forces, shall be a single roller bearing.

3. The lower bearings shall consist of at least one roller bearing for radial forces and one or two angular contact ball bearings for axial thrust.

4. The minimum L10 bearing life shall be 100,000 hours at any point along the usable portion of the pump curve at maximum product speed.

5. The lower bearing housing shall include an independent thermal sensor to monitor the bearing temperature.

F. Mechanical Seal:

1. Each pump shall be provided with a tandem mechanical shaft seal system consisting of two totally independent seal assemblies.

2. The lower seal shall be independent of the impeller hub. The seals shall operate in a lubricant reservoir that hydrodynamically lubricates the lapped seal faces at a constant rate.

3. The lower, primary seal unit, located between the pump and the lubricant chamber, shall contain one stationary and one positively driven rotating corrosion resistant tungsten-carbide seal ring.

4. The upper, secondary seal unit, located between the lubricant chamber and the motor housing, shall contain one stationary and one positively driven rotating corrosion resistant tungsten-carbide seal ring. Each seal interface shall be held in contact by its own spring system.

5. The seals shall not require maintenance or adjustment and shall be capable of operating in either clockwise or counterclockwise direction of rotation without damage or loss of seal. Should both seals fail and allow fluid to enter the stator housing, a port shall be provided to direct that fluid immediately to the stator float switch to shut down the pump and activate an alarm.

6. Any intrusion of fluid shall not come into contact with the lower bearings.

7. Conventional double mechanical seals with a single or a double spring between rotating faces, or that require constant differential pressure to affect sealing and are subject to opening and penetration by pumping forces, will not be acceptable.

8. Each pump shall be provided with a lubricant chamber for the shaft sealing system. The lubricant chamber shall be designed to prevent overfilling and to provide lubricant expansion capacity. The drain and inspection plug, with positive anti leak seal, shall be easily accessible from the outside. The seal system shall not rely upon the pumped media for lubrication.

9. The motor shall be able to operate continuously while not submerged without damage while pumping under load. Seal lubricant shall be FDA approved.

G. Cooling System:

1. Each pump/motor unit shall be provided with an integral, self-supplying cooling system. The motor water jacket shall encircle the stator housing and shall be of cast iron, ASTM A 48, Class 35B. The water jacket shall provide heat dissipation for the motor regardless of whether the motor unit is submerged in the pumped media or surrounded by air.

2. After passing through a classifying labyrinth, the impeller back vanes shall provide the necessary circulation of the cooling liquid, a portion of the filtered pump media, through the cooling system. Two cooling liquid supply pipes, one discharging low and one discharging high within the jacket, shall supply the cooling liquid to the jacket.

3. An air evacuation tube shall be provided to facilitate air removal from within the jacket. Any piping internal to the cooling system shall be shielded from the cooling media flow allowing for unobstructed circular flow within the jacket about the stator housing. Two cooling liquid return ports shall be provided.

4. The internals to the cooling system shall be non-clogging by virtue of their dimensions. Drilled and threaded provisions for external cooling and seal flushing or air relief are to be provided.

5. The cooling jacket shall be equipped with two flanged, gasketed and bolted inspection ports of not less than 4-inch diameter located 180 degrees apart.

6. The cooling system shall provide for continuous submerged or completely non-submerged pump operation in liquid or in air having a temperature of up to 40°C (104°F), in accordance with NEMA standards. Restrictions limiting the ambient or liquid temperatures at levels less than 40°C are not acceptable.

H. Pump Discharge Elbow:

1. The pump discharge connection shall be the elbow type.

2. The discharge connection shall be bolted to the structure as recommended by the Manufacturer and shall serve as a lower attachment for the guide rails, and as anchorage for the pump.

3. The anchorage system shall be designed to transmit all forces safely to the structure and may incorporate intermediate supports as required.

4. The design shall be non-sparking and shall conform to UL requirements for installation in a Class 1, Division 1, Group D hazardous location.

5. When in place, the discharge connection shall cause a watertight seal between the pump and the discharge elbow, accomplished by a machined metal to metal contact only, using simple linear downward motion of the pump with the entire weight of the pumping unit guided to and pressing tightly against the discharge connections.

6. Sealing of the discharge interface with a diaphragm, O-ring, or profile gasket shall not be acceptable. No portion of the pump shall bear directly on the floor of the wet well and no rotary motion of the pump shall be required for sealing.

I. Dual Rail Guide System

1. The pump shall be provided with a dual rail guide system to automatically and firmly connect the pump to the discharge piping when lowered into place on the discharge elbow.

2. Once the pump has been positioned on its support fitting at the discharge elbow, the guide rail system shall not be required for pump support.

3. The guide rail system shall allow easy removal of the pump without entering the wet well or disturbing the discharge piping. Single rail systems are not acceptable.

4. All components of the guide system and pump anchorage shall be of stainless steel.

J. Lifting Devices:

1. Each pump shall be provided with Type 316 stainless steel lifting chain and shackles of adequate strength to support 150 percent of the entire pump and motor assembly weight.

2. Provide Type 316 hammerlock link and U-Bolt as shown on the Drawings.

3. All lifting devices shall be rated as lifting devices and shall be provided with certification indicating they are rated for lifting device service.

4. Minimum chain size shall be 5/16-inch.

2.3 MOTORS

A. General:

1. Each pump shall be provided with a vertically mounted electric motor that conforms to the following requirements:

a. Motors shall be designed to accept the total, unbalanced thrusts imposed by the pump.

b. The motor and the pump shall be produced by the same manufacturer.

c. The motor shall be capable of continuous submergence underwater without loss of watertight integrity to a depth of 65 feet or greater.

B. Motor Design:

1. The pump motor shall be a NEMA B design, induction type with a squirrel cage rotor, shell type design, housed in an air filled, watertight chamber.

2. The stator windings shall be insulated with moisture resistant Class H insulation rated for 180°C (356°F). The stator shall be insulated by the trickle impregnation method using Class H monomer-free polyester resin resulting in a winding fill factor of at least 95%.

3. The stator shall be heat-shrink fitted into the cast iron stator housing.

4. The use of multiple step dip and bake-type stator insulation process is not acceptable.

5. The use of bolts, pins or other fastening devices requiring penetration of the stator housing is not acceptable.

6. The motor shall be specifically designed for submersible pump usage and designed for continuous duty pumping media of up to 40°C (104°F) with an 80°C temperature rise and capable of at least 15 evenly spaced starts per hour.

7. The rotor bars and short circuit rings shall be made of cast aluminum.

C. Service Factors:

1. The combined service factor (combined effect of voltage, frequency, and specific gravity) shall be a minimum of 1.15.

2. The motor shall have a voltage tolerance of plus or minus 10%.

3. The motor shall be designed for operation up to 40°C (104°F) ambient and with a temperature rise not to exceed 80°C.

4. A performance chart shall be provided upon request showing curves for torque, current, power factor, input/output kW and efficiency. This chart shall also include data on starting and no-load characteristics.

D. Moisture Protection:

1. A mechanical float switch (FLS) shall be mounted in the junction chamber to signal if there is water intrusion.

E. High Temperature Protection:

1. Thermal switches shall be embedded in the stator end coils to monitor the temperature of each phase winding.

2. One PT-100 type temperature sensor shall be installed in the stator winding.

3. These thermal switches shall be used in conjunction with and supplemental to external motor overload protection and shall be connected to the control panel.

4. The junction chamber shall be sealed off from the stator housing and shall contain a terminal board for connection of power and pilot sensor cables using threaded compression type terminals.

F. Power Cable:

1. The power cable shall be sized according to the NEC and ICEA standards and shall be of sufficient length to reach the junction box without the need of any splices.

2. The power cable shall be of a shielded design in which an overall tinned copper shield is included, and each individual phase conductor is shielded with an aluminum coated foil wrap.

3. The outer jacket of the cable shall be oil resistant chlorinated polyethylene rubber.

4. The motor and cable shall be capable of continuous submergence underwater without loss of watertight integrity to a depth of 65 feet or greater.

G. Pilot Cable:

1. The pilot cable for connection to the pump protection sensors shall be shielded, twisted pair cable integral with the power cable.

H. Cable Entry Seal:

1. The cable entry seal design shall preclude specific torque requirements to insure a watertight and submersible seal.

2. The cable entry shall consist of dual cylindrical elastomer grommets, flanked by washers, all having a close tolerance fit against the cable outside diameter and the cable entry inside diameter. The grommets shall be compressed by the cable entry unit, thus providing a strain relief function.

3. The assembly shall provide ease of changing the cable when necessary, using the same entry seal.

4. The cable entry junction chamber and motor shall be sealed from each other, which shall isolate the stator housing from foreign material gaining access through the pump top.

5. Epoxies, silicones, or other secondary sealing systems shall not be considered acceptable.

2.4 PROTECTION

A. All stators shall incorporate three bi-metal thermal switches, one for each stator phase winding, connected in series to monitor temperature of the motor winding. Should high temperature occur, the thermal switches shall open, stop the motor, and activate an alarm.

B. A float switch shall be provided in the seal leakage chamber to detect water intrusion into the stator housing. When activated, the switch will activate an alarm but not stop the motor.

C. The thermal switches and float switch shall be connected to a Mini-CAS II unit. The Mini-CAS unit shall be designed for mounting in the control panel. Thermal switches shall be connected to the normally open overtemp contact of the Mini-CAS II unit, in accordance with the wiring diagram in the Plans.

2.5 OTHER REQUIREMENTS

A. The head-capacity curve shall exhibit a uniformly rising characteristic from free discharge to shutoff. The pump motor shall be non-overloading at a flow rate equal to 125-percent of Duty Point 2 without employing the service factor.

PART 3 EXECUTION

3.1 INSPECTION

Inspect pumps and fittings before installation to verify quality of material.

3.2 INSTALLATION

A. Installation:

1. Install and align pumps and fittings in accordance with the Manufacturer's printed specifications and at the locations shown on the Drawings.

2. Use anchor bolts furnished or recommended by the Manufacturer.

3. Place the pumps using equipment templates.

B. Anchorage:

1. Anchors for the unit shall be set in the concrete. Unit shall be mounted as instructed by the Manufacturer.

2. Anchors shall be drilled and set with epoxy.

3. Provide 24 hours' notice prior to installing base elbows, to allow for anchor bolt inspection.

4. The Manufacturer shall supervise installation to ensure that the unit is properly aligned and leveled; that all electrical and piping connections are properly made; and that lubricants have been provided and installed.

3.3 STARTUP AND TESTING

A. See Section 01 75 00, Testing, Training, and Commissioning for additional requirements.

B. Pre-operational Checks:

1. Check pump and motor alignment.

2. Check for proper motor rotation.

3. Check pump and drive units for proper lubrication.

C. Manufacturer's Representative:

1. Furnish a representative of the Manufacturer to perform inspection, start-up, and training services.

2. The Manufacturer's representative shall be experienced in the operation and maintenance of the equipment and shall instruct COMPANY personnel in the operation and maintenance of the equipment, including step-by-step troubleshooting with necessary test equipment.

3. Check pump and motor for high bearing temperature and excessive vibration.

4. The representative shall check the installation and supervise initial start-up of the equipment, and shall perform, at a minimum, the following tests on each pump:

a. Measure and record shutoff head and power draw at shutoff head.

b. Measure and record actual operating head and power draw at actual operating head.

c. Measure and record operating head and power draw at two separate partially throttled flow rates.

d. Measure and record static head.

e. Duplicate all normal operating modes and all failure modes, including the removal and installation of pumps from the wet well using the guide rail system.

5. Testing shall include a comparison of measured installed flow and head, including shutoff head, with the Manufacturer's curve value. Any discrepancy shall be resolved prior to acceptance by COMPANY.

6. Manufacturer's Written Certification:

a. The Manufacturer's representative shall verify the complete assembly for proper alignment and connection, and quiet operation.

b. This service shall be provided for a minimum period of one trip and one day.

c. After the installation and operation of the equipment has been certified, the Manufacturer's representative shall train COMPANY personnel in the proper operation and maintenance of the equipment.

D. Verify pumps are operating at the design duty condition. Remove and replace units that do not meet the design operating criteria.

E. For all pump tests, ensure that the force main is full of liquid during the testing. The Contractor shall provide the necessary water and other materials required for the testing as defined herein and recommended by the Manufacturer. All testing shall use clean water as required by Section 01 75 00, Testing, Training, and Commissioning.

F. Submersible Pump Lift Test:

1. Lift each submersible pump above the access hatch and then lower the pump back down onto the discharge elbow to demonstrate adequate clearances, smooth operation of the guide rail system, and proper re-seating of the pump on the discharge elbow.

G. A start-up report, acceptable to and approved by the Engineer, shall be completed by the Manufacturer's representative before final acceptance of the pumps.

END OF SECTION

Page left intentionally blank

SECTION 43 41 41 – BOLTED STEEL TANK

PART 1 GENERAL

1.1 SUMMARY

A. Section includes Factory Powder Coated Bolted Steel Tank for storing backwash water from the arsenic filters.

B. This specification covers the furnishing of all labor, material, equipment, tools, services and erection.

C. Related Sections:

1. Section 01 32 16 - Construction Progress Schedule.
2. Section 01 33 00 - Submittal Procedures.
3. Section 01 40 00 - Quality Requirements.
4. Section 01 70 00 - Execution and Closeout Requirements.

1.2 DEFINITIONS

A. Not used.

1.3 REFERENCE STANDARDS

A. AWWA

1. The bolted steel tank shall conform to the requirements of American Water Works Association (AWWA) D103-09 Standard for Factory-Coated Bolted Carbon Steel Tanks for Water Storage.
2. Disinfecting of interior surfaces shall be performed in accordance with AWWA C652-86.

B. ASME International:

1. ASME B16.1 - Gray Iron Pipe Flanges and Flanged Fittings: Classes 25, 125, and 250.
2. ASME B16.42 - Ductile Iron Pipe Flanges and Flanged Fittings: Classes 150 and 300.

C. Code of Federal Regulations:

1. 29 CFR Part 1926.502.

D. NSF International:

1. NSF 61 - Drinking Water System Components - Health Effects.
2. NSF 372 - Drinking Water System Components - Lead Content.

1.4 COORDINATION

A. Coordinate Work of this Section with location and placement of utilities and piping.

1.5 PREINSTALLATION MEETINGS

A. Convene minimum one week prior to commencing Work of this Section.

1.6 SCHEDULING

A. Schedule Work of this Section after concrete Work for support pad and prior to connecting utility and piping Work.

1.7 SUBMITTALS

A. Product Data:

1. Submit data for expansion joint fittings and other pipe specialty fittings.

2. Submit data for ladder and ladder safety devices.

3. Submit information concerning materials of construction and fabrication of the tank and systems.

B. Shop Drawings:

1. Indicate complete plan, elevation, and sectional drawings showing critical dimensions.

2. Indicate inlet, outlet, drain and overflow piping details including fittings, expansion joints, pipe support methods, manhole, and air vent.

3. Indicate ladder and ladder safety device details.

4. Indicate handrail details.

5. Indicate access hatch details.

6. Indicate anchoring system.

7. Submit shop drawings of the bolted steel reservoir and all accessories for review and approval by the engineer prior to beginning any related shop fabrication or erection. Include sufficient data to show that the reservoir and accessories conform to the requirements to these Specifications.

C. Manufacturer's Certificate:

1. Certify that products meet or exceed specified requirements.

2. Submit certified list of tank installations storing same liquid and concentration, in service for period of not less than five years.

D. Ower Installation Certificate: Obtain from Tank Manufacturer's representative and submit, attesting that tank has been properly installed and is ready for startup and testing.

E. Delegated Design Submittals: Submit signed and sealed Shop Drawings with design calculations and assumptions for determination of shell thickness, nozzle reinforcement, and special elements of vessel construction and support.

F. Test and Evaluation Reports:

1. Submit certified data on physical properties of laminates being used to include laminate tensile modulus and flexural modulus in hoop and axial directions, and data on laminate makeup to include number and thickness of layers and layer glass content.

2. Submit certified factory test results.

G. Manufacturer Instructions: Submit detailed instructions on installation requirements, including tank handling procedures, anchoring, and layout.

H. Source Quality-Control Submittals: Indicate results of shop or factory tests and inspections.

I. Field Quality-Control Submittals: Indicate results of Contractor-furnished tests and inspections.

J. Manufacturer Reports: Certify that tank has been installed according to Manufacturer instructions.

K. Qualifications Statements:

1. Submit qualifications for Manufacturer, installer, and licensed professional.

2. Submit Manufacturer's approval of installer.

1.8 CLOSEOUT SUBMITTALS

A. Project Record Documents: Record actual locations and final orientation of tank and accessories.

1.9 QUALITY ASSURANCE

A. Materials in Contact with Potable Water: Certified according to NSF 61 and 372.

B. Perform Work according to COMPANY standards.

C. Maintain one copy of each standard affecting Work of this Section on Site.

1.10 QUALIFICATIONS

A. Manufacturer: Company specializing in manufacturing products specified in this Section with minimum three years' documented experience.

B. Installer: Company specializing in performing Work of this Section with minimum three years' documented experience and approved by Manufacturer.

C. Licensed Professional: Professional engineer experienced in design of specified Work and licensed in State of Arizona.

1.11 DELIVERY, STORAGE, AND HANDLING

A. Inspection: Accept materials on Site in Manufacturer's original packaging and inspect for damage.

B. Store materials according to Manufacturer instructions.

C. Protection:

1. Protect materials from moisture and dust by storing in clean, dry location remote from construction operations areas.

2. Provide additional protection according to Manufacturer instructions.

1.12 EXISTING CONDITIONS

A. Field Measurements:

1. Verify field measurements prior to fabrication.

2. Indicate field measurements on Shop Drawings.

1.13 WARRANTY

A. Furnish **1-year** Manufacturer's warranty from the date of shipment against any defects in workmanship and materials.

1.14 FOUNDATION

A. Tank foundation shall be concrete ringwall per AWWA D103-09 section 13.4.1 or granular berm with steel retainer ring per AWWA D103-09 section 13.4.5.

PART 2 PRODUCTS

2.1 FACTORY POWDER COATED BOLTED STEEL TANK TANKS

A. Manufacturers:

1. Superior Tank Co., Inc.

2. Or equal.

a. Equivalent request must be submitted and approved at the time of bid.

B. Description:

1. Construction Method:

a. Bolted Steel.

b. Comply with AWWA D103-09 Standard for Factory-Coated Bolted Carbon Steel Tanks for Water Storage.

2. Configuration:

a. Orientation: Vertical.

b. Bottom: conic.

c. Top: Integral and closed.

3. Materials:

a. To resist and retain process fluid without leakage or damage to structural integrity of tank.

b. Minimum Thickness: 1/4 inch.

c. Plates and Sheets: Plates and sheets shall conform to appropriate ASTM designation as set forth in Section 4.4, AWWA D103-09, and shall have a minimum yield strength of 30,000 psi.

d. Structural Shapes: Structural shapes shall conform to the requirements and ASTM designations of AWWA D103-09 section 4.5.

e. Bolts: Tank joint bolting shall be minimum ½" diameter, shall meet the requirements of AWWA D103-09 section 4.2.1. and have tensile strength of at least 120,000 pounds per square inch.

f. Gaskets and Sealant: All gaskets and sealants used on this tank shall conform to the requirements of AWWA D103-09 section 4.10.

C. Performance and Design Criteria:

1. Tank Capacity & Dimensions

a. Nominal Capacity: 21,468 gal

b. Usable Capacity: 19,632 gal

c. Inside Diameter: 12.3 ft

d. Tank Height : 24.1 ft

2. Seismic Design Criteria

a. Seismic Use Group: Per D103 14.2.1

b. Seismic Importance Factor, IE: Per D103 14.2.2

c. Site Class: Per D103 14.2.4

d. S_s: Per D103 14.2.3

e. S_1: Per D103 14.2.3

f. F_a: Per D103 14.2.6

g. Fv: Per D103 14.2.6

3. Design Wind Loading

a. Design Wind Speed, V: Per D103 15.1.2

b. Gust Factor, G: Per D103 15.1.1

c. Importance Factor, I: Per D103 15.1.1

d. Exposure Category: Per D103 15.1.3

4. Roof Design Loading

a. Roof Live Load: Per D103 5.2.3.1

b. Ground Snow Load: Per D103 5.2.3.2

5. Liquid to be stored: Potable water

D. Allowable Soil Bearing Pressure: Up to 1,500 pounds per square foot.

2.2 PROTECTIVE COATING

A. General: All metal plates, supports, members and miscellaneous parts, except bolts, shall be Factory Powder Coated in accordance with AWWA D103, Section 12.6 and this Section. Field coating, other than touch-up, will not be permitted.

B. Surface Preparation:

1. All steel surfaces shall be shot blasted to equivalent of a SP 10 or better near white metal finish. The surface anchor pattern shall be no less than 1.5 mils.
2. Spray a final Deionized water rinse with Silica-Zirconium (Si-Zr) sealer to prevent rusting prior to the powder coating application and provide additional level of corrosion protection
3. All steel surfaces shall drip dry for seven (7) minutes prior to entering the dry off oven for eight (8) minutes at 425 degrees F.

C. Coating:

1. All interior steel surfaces, support members and miscellaneous parts shall receive 5 mils minimum average dry film thickness using *Dupont/Axalta* "Tank Tan" (An NSF 61 Approved, Thermal Set Epoxy Powder Coating).
2. All exterior steel surfaces, support members and miscellaneous parts shall receive minimum 2 mils average dry film thickness “Tank Tan” primer under 3 mils minimum average dry film thickness using *Dupont* "Superior Sand" (A Thermal Set TGIC-Polyester Powder Coating), for a total of 5 mils.
3. NOTE: Painted, uncoated, or glass lined bolted tanks and FRP tanks are not considered equal.

2.3 ACCESSORIES

A. Shell Manhole: Provide a 36", minimum, hinged shell manhole located as shown on the drawings. The center of the manhole shall be located 30 inches above the bottom of the tank.

B. Pipe Connections:
   1. Provide inlet nozzle, outlet nozzle with antivortex plate {recommended}, and overflow and drain outlets as shown on the plans.
   2. Provide a 1-inch NPT tank connection as shown on the plans for sampling connection.

C. Overflow pipe:
   1. Provide steel internal or external overflow pipe, internal weir box, if required, and supports as shown on the plans.
   2. Overflow pipe assembly shall be powder epoxy lined and coated for corrosion protection.
   3. Diameter: 6 inch.

D. Ladders:
   1. Comply with 29 CFR Part 1926.502.
   2. Furnish top grab bars extend not more than 18 inches above top of tank.
   3. Provide a galvanized steel welded exterior ladder with backguard as shown on the plans. The ladder shall have a lockable closure at the bottom.
   4. Provide a galvanized steel welded interior ladder. Safe-T-Climb assembly is optional.

E. Roof Openings:
   1. A 20 inch screened vent shall be provided on the roof. The vent shall be fabricated to provide removable screened openings between the vertical support members of the vent. The screened openings of the vent shall be sized by the manufacturer to all venting of a 3,000 gpm pumping rate. An effective area of 75% of screen opening shall be assumed. The screen shall consist of one layer of Type 316 stainless steel: 16 x 16 x 0.018 wire mesh insect screen.
   2. The tank roof shall have a curbed, upward opening 24-inches square, minimum hatch located near the ladder. The curb shell extend at least 4 inches above the tank. The hatch cover shall be hinged and shall have locking provisions. The hatch cover lip shall extend for a distance of 2-inches down on the outside of the curb.

F. Provide a Superior Tank Model # 2400, Liquid Level Indicator with Type 316 stainless steel internals and complete with float and target board assembly is optional.

G. Gaskets and sealants shall meet or exceed AWWA, FDA, and EPA standards for potable water.

H. Anchor bolts and stirrups, if required, to be furnished by the tank manufacturer.

I. Tank Nameplate:

1. Mark each tank with encapsulated paper tag or stainless-steel nameplate not less than 4 by 6 inches in size and attached to outside of tank wall.

2. Print following information on nameplates:

a. Name of Manufacturer.

b. Capacity in gallons.

c. Manufacturer serial number.

d. Year built.

e. Maximum specific gravity.

f. Design pressure and temperature.

g. Construction material.

J. Support Pad:

1. Dimensions: As indicated on Drawings.

2.4 SOURCE QUALITY CONTROL

A. Certify through visual inspection of tanks after fabrication that Acceptance Level requirements of AWWA D103-09 are met.

B. Certify following during shop inspection:

1. Compliance with Drawing dimensions.

2. Surface cure by acetone wipe test; no surface tackiness is permitted.

3. Liquid tightness by minimum 24-hour hydrostatic test.

C. Owner Inspection:

1. Make completed tank available for inspection at Manufacturer's factory prior to packaging for shipment.

2. Notify COMPANY at least seven days before inspection is allowed.

D. Certificate of Compliance:

1. If Manufacturer is approved by authorities having jurisdiction, submit certificate of compliance indicating Work performed at Manufacturer's facility conforms to Contract Documents.

2. Specified shop tests are not required for Work performed by approved manufacturer.

PART 3 EXECUTION

3.1 EXAMINATION

A. Verify layout and orientation of tank accessories, utilities, and piping connections.

3.2 PREPARATION

A. Thoroughly clean storage tank pad, removing loose concrete, dust, and other debris.

B. Prepare pad according to Tank Manufacturer instructions prior to placing tank.

3.3 INSTALLATION

A. Field erection of Factory Powder Coated bolted steel tanks shall be in strict compliance with manufacturer's recommendations and performed by manufacturer's employees or certified erection crew to alleviate any potential disputes in coating quality or erection thereof. Particular care shall be exercised in handling and bolting of the tank plates, supports, and members to avoid abrasion or scratching the coating. Prior to placing water in the tank, a "holiday" inspection of the entire tank, corners included, will be provided and performed by the manufacturer in the presence of the owner. Touch-up coating shall be done per the manufacturer's recommendations where needed and as directed to achieve 100% holiday-free surface

B. Support Pad: Using templates furnished with tank, install anchor bolts and accessories for mounting and anchoring tank.

C. Install tank as indicated on Drawings and according to Manufacturer instructions.

D. Connect piping to tank.

E. Install tank accessories not factory mounted to complete installation.

3.4 FIELD QUALITY CONTROL

A. Field Testing:

1. Hydrostatically test each FRP tank by filling with water to the overflow pipe level.

2. Conduct test minimum 48 hours.

3. No leakage permitted.

B. Manufacturer Services: Furnish services of Manufacturer's representative experienced in installation of products supplied for not less than three days on Site for installation, inspection, startup, field testing, and instructing COMPANY personnel in operation and maintenance of equipment.

C. Equipment Acceptance: Adjust, repair, modify, or replace components failing to perform as specified and rerun tests.

D. Furnish installation certificate from Equipment Manufacturer's representative attesting that equipment has been properly installed and is ready for startup and testing.

E. General: Test storage tank after erection. Floor shall be clean and free from dirt, foreign substance and debris.

F. Bottom: Vacuum test seams in floor plates.

G. Shell: Test by filling with water to elevation of overflow. Completed storage tank shall show no leaks at end of 24 hour test period. No charge will be made for water required to fill tank.

H. Disinfection:

1. General: After testing has been satisfactorily completed, tank shall be disinfected.

2. Standards: Disinfecting of interior surfaces shall be performed in accordance with AWWA C652-86. After disinfection, Contractor shall take a water specimen for bacteriological test, as prescribed at Code 40 of the Federal Regulations, Sections 141.21 through 141.30, 141.41 and 141.42.

3. After disinfection, the tank shall be filled to the overflow level and allowed to stand for 5 days, minimum. After 5 days. Contractor shall take water specimens for V.O.C. test per EPA 502.2. The tank may be placed into service once acceptable test results are received.

3.5 ATTACHMENTS

A. Factory-Coated Bolted Carbon Steel Storage Tank Schedule:

1. T-1:

a. Material Stored: Steel.

b. Configuration: Vertical.

c. Dimensions: 12.3 ft x 24.1 ft (D x H).

d. Capacity: 21,468 gal.

e. Connections: Bolted.

f. Accessories: Inlet, outlet, overflow, drain, air vent, manhole, ladder, level indicator.

END OF SECTION

SECTION 46 41 17 - INLINE STATIC MIXERS

PART 1 GENERAL

1.1 SUMMARY

A. Section Includes: Requirements to furnish and install Inline static mixers for use in a water treatment facility.

1.2 DEFINITIONS

A. PVC: Polyvinyl Chloride.

B. PVDF: Polyvinylidene fluoride.

1.3 REFERENCE STANDARDS

A. American Water Works Association:

1. AWWA C115 - Flanged Ductile-Iron Pipe with Ductile-Iron or Gray-Iron Threaded Flanges.

B. ASTM International:

1. ASTM A312/A312M - Standard Specification for Seamless, Welded, and Heavily Cold Worked Austenitic Stainless Steel Pipes.

2. ASTM A536 - Standard Specification for Ductile Iron Castings.

C. NSF International:

1. NSF 61 - Drinking Water System Components - Health Effects.
2. NSF 372 - Drinking Water System Components - Lead Content.

1.4 COORDINATION

A. Coordinate Work of this Section with piping and equipment connections specified in other Sections.

1.5 SUBMITTALS

A. Section 01 33 00 - Submittal Procedures: Requirements for submittals.

B. Product Data: Submit Manufacturer information, including system materials, component equipment, and performance characteristics.

C. Shop Drawings:

1. Submit dimensional drawings and details.
2. Indicate schedule of equipment components.
3. Indicate materials of construction.
4. Indicate installation requirements, including fasteners and other details.
5. Indicate mounting details.

D. Manufacturer's Certificate: Certify that products meet or exceed specified requirements.

E. Manufacturer Instructions: Submit detailed instructions regarding installation requirements, including storage and handling procedures.

F. Source Quality-Control Submittals: Indicate results of factory tests and inspections.

G. Field Quality-Control Submittals: Indicate results of Contractor-furnished tests and inspections.

H. Manufacturer Reports: Certify that equipment has been installed according to Manufacturer instructions.

1.6 QUALITY ASSURANCE

A. Materials in Contact with Potable Water: Certified according to NSF 61 and 372.

B. Suitable with use with the chemicals specified herein.

1.7 DELIVERY, STORAGE, AND HANDLING

A. Inspection: Accept materials on Site in Manufacturer's original packaging and inspect for damage.

B. Store materials according to Manufacturer instructions.

C. Protection:

1. Protect materials from moisture and dust by storing in clean, dry location remote from construction operations areas.

2. Provide additional protection according to Manufacturer instructions.

1.8 EXISTING CONDITIONS

A. Field Measurements:

1. Verify field measurements prior to fabrication.
2. Indicate field measurements on Shop Drawings.

1.9 WARRANTY

A. Furnish five year Manufacturer's warranty for static mixers.

PART 2 PRODUCTS

2.1 INLINE STATIC MIXERS

A. Manufacturers

1. Westfall Model 2800
2. Koflo PICO
3. Or equal.

B. Description: Wafer style static mixer with number of injection ports per Drawings, sized to accept the specified injection quills. Compact ring body design for mounting between two standard pipe flanges. Mixer plate shall effectively mix the injected fluid with process fluid. The mixer body and plate material shall be suitable for handling water as the process fluid at the maximum flow rate shown herein, with injection fluid as specified herein.

C. Performance and Design Criteria:

1. Mixer 1: Mixing Header

    a. Pipe Diameter: 6 inches
    b. Number of Elements: 1
    c. Chemicals Dosed: 75% Phosphoric Acid, 80% Acetic Acid
    d. Maximum Working Pressure: 80 psi
    e. Flow Rate: 230 gpm
    f. Maximum Pressure Loss: 2.5 psi

2. Mixer 2: Mixing Header

    a. Pipe Diameter: 6 inches
    b. Number of Elements: 1
    c. Chemicals Dosed: 50% Sodium Hydroxide
    d. Maximum Working Pressure: 80 psi
    e. Flow Rate: 230 gpm
    f. Maximum Pressure Loss: 2.5 psi

3. Mixer 3: Prior to Arsenic Filters

    a. Pipe Diameter: 8 inches
    b. Number of Elements: 1
    c. Chemicals Dosed: 12.5% Sodium Hypochlorite, 50% ACH
    d. Maximum Working Pressure: 80 psi
    e. Minimum Flow Rate: 230 gpm
    f. Maximum Flow Rate: 470 gpm
    g. Maximum Pressure Loss: 2.5 psi

4. Mixer 4: Prior to Arsenic Filters

    a. Pipe Diameter: 8 inches
    b. Number of Elements: 1
    c. Chemicals Dosed: 40% Ferric Chloride
    d. Maximum Working Pressure: 80 psi
    e. Minimum Flow Rate: 230 gpm
    f. Maximum Flow Rate: 470 gpm
    g. Maximum Pressure Loss: 2.5 psi

D. Materials:

1. Body – includes housing and mixer element, shall be made of one of the following:

    a. Ductile Iron

1) Comply with ASTM A536.

b. 316 Stainless Steel

1) Comply with ASTM A312.
2) Provide isolation between stainless steel and ductile iron pipe.

E. Finishes:

1. See Section 40 05 13 Common Work Results for Process Piping.

2.2 ACCESSORIES

A. Chemical Injection Port: Female threaded.

1. Number of ports

a. At minimum, provide one port per injected chemical. Provide additional ports were required in Drawings.

B. Chemical Injection Assembly

1. NSF 61 certified.

2. ½-inch diameter injection quill. Quill length per Drawings. Injection quill shall be retractable and include a check valve with the assembly.

3. Assembly shall attach to threaded static mixer inlet with correctly mated fittings.

4. Injection quill assembly shall meet maximum working pressures of 100 psi at 75 degrees F.

5. Solution tube and all wetted parts shall be compatible with the chemical to be delivered.

6. Manufacturers

a. Primary Fluid Systems
b. Koflo
c. Or equal

2.3 SOURCE QUALITY CONTROL

A. Section 01 40 00 - Quality Requirements: Requirements for testing, inspection, and analysis.

B. Provide shop inspection and testing of completed assembly.

C. Certificate of Compliance:

1. If fabricator is approved by authorities having jurisdiction, submit certificate of compliance indicating Work performed at fabricator's facility conforms to Contract Documents.

2. Specified shop tests are not required for Work performed by approved fabricator.

PART 3 EXECUTION

3.1 EXAMINATION

A. Section 01 70 00 - Execution and Closeout Requirements: Requirements for installation examination.

B. Verify that field dimensions are as indicated on Shop Drawings.

C. Inspect existing flanges for nonstandard bolt-hole configurations or design and verify that static mixer and flange mate properly.

3.2 INSTALLATION

A. According to Manufacturer instructions.

B. Comply with straight pipe diameters requirements before and after the mixer.

3.3 FIELD QUALITY CONTROL

A. Section 01 40 00 - Quality Requirements: Requirements for inspecting and testing.

B. Equipment Acceptance:

1. Adjust, repair, modify, or replace components failing to perform as specified and rerun tests.

C. Furnish installation certificate from Equipment Manufacturer's representative attesting that equipment has been properly installed and is ready for startup and testing.

END OF SECTION

Page left intentionally blank.

SECTION 46 60 00 BIOLOGICAL REACTOR SYSTEMS

1.1 SUMMARY

A. The provisions of this Section shall apply to:

1. The blending header, where raw water quality parameters are monitored and chemical dosing is applied following bag filtration and prior to flow entering the biological reactors, and the Control Panel No. 1 that houses the instrumentation serving the bioreactors, the influent pumping system, and the chemical feed area.

2. The biological denitrification reactors, which use an encapsulated biocatalyst in a continuous-stirred tank reactor to convert nitrate to nitrogen gas.

3. The intermediate pump station located between the atmospheric-pressure bioreactors and the granular filters, providing the pressure required for filtration and supplying dilute water for chlorine recycle operations.

4. The process chemical systems supporting operation of the bioreactors and filters. Six chemicals are utilized, with chlorine applied at two separate locations at different concentrations.

B. Provide all labor, equipment and materials and perform all operations in connection with the installation and testing of Biological Reactor Systems as specified below and in the Construction Drawings.

C. Coordinate and utilize all factory testing, installation, start-up, and field-testing services supplied in conjunction with the system equipment.

D. All work performed under this Section shall be in accordance with all approved trade practices and Manufacturer's recommendations.

E. Section includes:

1. Product by area:

a. Blending Header and Biological Reactor System Control Panel

b. Biological Nitrate Removal Reactors

c. Intermediate Pump Station

d. Chemicals Feed Systems

2. Quality control factory and field testing.

F. Related Sections:

1. Section 01 33 00 - Submittal Procedures: Requirements for submittals.

2. Section 01 60 00 - Product Requirements: Requirements for transporting, handling, storing, and protecting products.

3. Section 01 70 00, Execution and Closeout Requirements: Requirements for installation preparation, examination, demonstration, training, warranties.

4. Section 03 30 00, Cast-in-Place Concrete

5. Section 05 50 00, Metal Fabrications

6. Section 09 90 00, Painting and Coating

7. Section 26 09 22, Variable-Frequency Motor Controllers

8. Section 40 05 78, Miscellaneous Valves

9. Section 40 05 13, Common Work Results for Process Piping

10. Section 40 05 13.53, Ductile Iron Process Piping

11. Section 43 05 48, Vibration and Seismic Controls for Process Gas and Liquid Handling Equipment

12. Section 43 21 00, Liquid Pumps General

1.2 REFERENCE STANDARDS

A. American Society of Mechanical Engineers (ASME):

1. ASME B1.20.1 - Pipe Threads, General Purpose.

2. ASME B16.1 - Gray Iron Pipe Flanges and Flanged Fittings: Classes 25, 125, and 250.

3. ASME B16.5 - Pipe Flanges and Flanged Fittings: NPS 1/2 through NPS 24 Metric/Inch Standard.

B. NSF International:

1. NSF 61 - Drinking Water System Components - Health Effects.

2. NSF 372 - Drinking Water System Components - Lead Content.

3. NSF 600 - Health Effects Evaluation and Criteria for Chemicals in Drinking Water.

C. Occupational Safety and Health Administration (OSHA):

1. 29 CFR 1910 - Occupational Safety and Health Standards.

1.3 COORDINATION

A. Section 01 30 00, Administrative Requirements: Requirements for coordination.

B. Coordinate Work of this Section with location and placement of utilities and piping.

1.4 SUBMITTALS

A. Shop Drawings: Provide the following information:

1. Equipment name, identification number, and applicable Section number from Project specifications.

2. Performance Data:

3. Assembly and Installation Drawings: Including size, quantities, materials, fitting, appurtenances, part nomenclature, material list, outline dimensions, and shipping weights.

B. Operation and Maintenance Manual: Containing the required information for each equipment or system by section.

C. Spare Parts List: Containing the required information for each equipment section.

D. Factory Test Data: Signed, dated, and certified for each mechanical system which requires factory testing submitted before shipment of equipment. Requirements for factory test data are specified below.

E. Certifications:

1. Manufacturer’s certification of proper installation.

2. Contractor’s certification of satisfactory field testing.

F. All pump motor information as required in Division 43.

G. Field Quality-Control Submittals: Indicate results of Contractor-furnished tests and inspections.

H. Qualifications Statements:

1. Submit qualifications for Manufacturer.

2. Submit Manufacturer's approval of installer.

I. Certificate of Compliance:

1. Submit certificate of compliance indicating Work performed at fabricator's facility conforms to Contract Documents.

1.5 MAINTENANCE MATERIAL SUBMITTALS

A. See Section 01 78 23, Operation and Maintenance Data for requirements.

1.6 QUALITY ASSURANCE

A. Materials in Contact with Potable Water: Certified to NSF Standards 61 and 372.

B. Perform Work according to COMPANY’S standards.

C. Maintain one copy of each standard affecting Work of this Section on Site.

1.7 QUALIFICATIONS

A. Manufacturer: Company specializing in manufacturing products specified in this Section with minimum three years' documented experience.

B. Installer: Company specializing in performing Work of this Section with minimum three years' documented experience and approved by Manufacturer.

1.8 DELIVERY, STORAGE, AND HANDLING

A. Inspection: Accept materials on Site in Manufacturer's original packaging and inspect for damage.

B. Store materials according to Manufacturer instructions.

C. Protection:

1. Protect materials from moisture and dust by storing in clean, dry location remote from construction operations areas.

2. Provide additional protection according to Manufacturer instructions.

1.9 EXISTING CONDITIONS

A. Field Measurements:

1. Verify field measurements prior to fabrication.

2. Indicate field measurements on Shop Drawings.

1.10 WARRANTY

A. Furnish manufacturer's warranty for biological reactors: To be submitted with the bid proposal.

B. Furnish Manufacturer's warranty for pumping systems: Per Section 43 21 00 – Liquid Pumps General

C. Furnish Manufacturer's warranty for instrumentation: To be submitted with the bid proposal.

D. Furnish Manufacturer's warranty for intermediate pump station tank: To be submitted with the bid proposal.

PART 2 PRODUCTS

2.1 GENERAL

A. Materials and equipment shall be standard products of a manufacturer and distributor regularly engaged in the manufacture and distribution of such products for at least 2 years and shall be suitable for the service intended.

B. All materials and equipment shall be new and unused except for the testing specified herein.

C. Compliance with the requirements of the individual pump sections may necessitate modifications to the Manufacturer's standard equipment.

D. All centrifugal pumps shall have a continuously rising performance curve. In no case shall the required horsepower at any point on the performance curve exceed the rated horsepower of the motor or engine or encroach on the service factor.

E. All components of each pump system provided under the pump sections shall be entirely compatible. Each unit of pumping equipment shall incorporate all basic mechanisms, couplings, electric motors or engine drives, variable speed controls, necessary mountings, and appurtenances.

F. The pumps shall be supplied by a distributor authorized to service them throughout the warranty period and beyond. The distributor shall be located within a 100-mile radius of the site.

G. All materials and coatings coming in contact with potable water shall be ANSI/NSF Standard 61 approved.

H. The pumping units shall all be supplied by one vendor (unit responsibility) and shall be complete including pumps, motors, column assemblies, suction cans, baseplates, couplings, guards, and other accessories.

I. The complete pump assembly shall be designed and built for continuous service at any and all points within the specified range of operation, without overheating, without damaging cavitation, and without excessive vibration or noise.

2.2 MATERIALS

A. All materials shall be suitable for the intended application; materials not specified shall be high-grade, standard commercial quality, free from all defects and imperfection that might affect the serviceability of the product for the purpose for which it is intended, and shall conform to the following requirements:

1. Cast iron pump casings and bowls shall be of close-grained gray cast iron, conforming to ASTM A 48 - Gray Iron Casings, Class 30, or equal.

2. Stainless steel pump shafts shall be Type 416 or 316.

3. Miscellaneous stainless steel shall be of Type 316, except in a septic environment.

4. Anchor bolts, washers, and nuts supplied by the Contractor for non-corrosive applications shall be galvanized steel in accordance with the requirements of Section 05 50 00, Metal Fabrications. Anchor bolts, washers, and nuts in corrosive service applications shall be stainless steel in accordance with that Section.

2.3 BLENDING HEADER AND BIOLOGICAL REACTORS SYSTEM CONTROL PANEL

A. System Description: The blending header is the location where raw water quality parameters are monitored and chemical dosing is applied following bag filtration and prior to flow entering the biological reactors. Control Panel No. 1 houses the instrumentation serving the bioreactors, the influent pumping system, and the chemical feed area.

B. System Design and Performance

1. Flow Scenarios

a. 230 to 253 gpm

C. System Equipment

Component	Quantity	Manufacturer	Model	Performance/Dimension
Influent Pressure Sensor/Transmitter	1	Endress + Hauser	Cerabar PMP	N/A
Influent Temperature Sensor/Transmitter	1	Endress + Hauser	iTherm TM	N/A
Influent flow control valve	1	CLA-VAL	TBD	N/A
Influent flow meter	1	Endress + Hauser	Promag 400	N/A
Control Panel #1 with Booster pump VFDs, Mixer VFDs, Low Voltage for PLC, HMI & instruments on reactors and booster tank, Power/control to automated valves on reactors, Panel Air Cond, Analyzer panel w sample pump	1	OCD Automation, Schneider Electric Based - VFDs, PLC and programming	Custom	N/A
Control Panel #1 Nitrate Analyzer from Combined Bioreactors Effluent	1	HACH	Nitratax	N/A
Control Panel #1 Turbidity Analyzer from Combined Bioreactors Effluent	1	HACH	TU5 Series	N/A

2.4 BIOLOGICAL NITRATE REMOVAL REACTORS

A. System Description: The biological denitrification process uses an encapsulated biocatalyst in a continuous-stirred tank reactor to convert nitrate to nitrogen gas.

B. System Design and Performance

1. Water Quality In: 19.2 mg/L NO_3-N

2. Water Quality Out: 1.92 to 5.76 mg/L NO_3-N

3. Percentage Nitrate Removal: 70 to 90 %

4. Flow Scenarios

a. In parallel operation

b. 85 to 126.5 gpm/reactor

5. Hydraulics

a. Empty bed contact time in R zone of reactor: 39 to 58 minutes

C. System Equipment

Component	Quantity	Manufacturer	Model	Performance/Dimension
Reactor (Duty)	3	Microvi	N/A	6,365-gallon 304 stainless steel reactor (8.5' D x 15' H)
Mixer	3	MixTec	1087	Mixer with 3 stainless hydrofoil impellers, motor 3 hp, vfd
Catalyst	3	Microvi	MNE	1,225 gal/reactor
Continuous level sensing	3	GEMs	UCL Series	N/A
Redundant hi-level switch	3	GEMs	CAP Series	N/A
pH Sensor/Transmitter Assembly	1	HACH	sc Series	Movable pH sensor with 3 position selector to select tank that the pH sensor is located
Individual tank flowmeter	3	Endress + Hauser	Promag 400	N/A
Individual tank shut off valve	3	TBD	TBD	N/A

2.5 INTERMEDIATE PUMP STATION

A. System Description: An intermediate pump station is located between the atmospheric-pressure bioreactors and the granular filters. The station supplies the pressure required for filtration and provides dilute water for chlorine recycle operations.

B. System Design and Performance

1. Inlet: Effluent from the biological reactors and the backwash recycle stream

2. Outlet: Discharge to the arsenic filters and the dilute chlorine tank

3. Flow Scenarios

a. 253 gpm when backwash recycling is not in operation

b. 276 gpm when backwash recycling is in operation

4. Pressure

a. 45 psi at the filters inlet

C. System Equipment

Component	Quantity	Manufacturer	Model	Performance/Dimension
Tank	1	PolyProcessing	Custom	6,100-gallon tank (10' D x 12.67' H)
Continuous level sensing	1	GEMs	UCL Series	N/A
Redundant high- and low-level switches	1	GEMs	CAP series	N/A
Booster Pumps (Duty + Standby)	2	Grundfos	CRE 45-2 KN-G-A-E-HQQE	Vertical, multistage centrifugal pump with integrated frequency converter, 20 HP
Booster pump Pressure Sensor/Transmitter	2	Endress + Hauser	Cerabar PMP	N/A
Chlorine Dilution Water Flowmeter	1	Endress + Hauser	Promag 400	N/A
Well #1 (Booster Pump) Flowmeter	1	Endress + Hauser	Promag 400	N/A

2.6 CHEMICALS

A. System Description: Process chemicals are added for the operation of the bioreactors and filters. A total of six chemicals is utilized, with chlorine applied at two separate locations at different concentrations.

B. System Design and Performance

1. Injection Locations: Upstream of the bioreactors, Q zone within the bioreactors, and upstream of the filters.

2. Chemicals Concentration: 12.5 to 80 %

3. Dose injected: 1 to 97.2 mg/L

Flow Scenarios

a. Minimum 96 gpm when Well 3 is operating with a 60% bypass

b. Maximum 516 gpm for both wells in operation

C. System Equipment

Component	Quantity	Manufacturer	Model	Performance/Dimension
Acetic Acid Pumps (Duty + Standby)	2	TBD	TBD	TBD
Phosphoric Acid Pumps (Duty + Standby)	2	Stenner	S3001	0.79 L/h, peristaltic
Sodium Hydroxide Pumps (Duty + Standby)	2	Stenner	S3007	6.31 L/h, peristaltic
Aluminum Chlorohydrate Pumps (Duty + Standby)	2	Stenner	S3002	2.68 L/h, peristaltic
Ferric Chloride Pumps (Duty + Standby)	2	Stenner	S3007	6.31 L/h, peristaltic
Sodium Hypochlorite Pumps Dilute Tank (Duty + Standby)	2	Stenner	S3002	2.68 L/h, peristaltic
Sodium Hypochlorite Pumps Filters (Duty + Standby)	2	Stenner	S3007	6.31 L/h, peristaltic
Chlorine Dilution Tank	1	PolyProcessing	Custom	475 gallon poly tank (4' D x 5'-2' Side H)
Chlorine Dilution Tank Continuous level sensing	1	GEMs	UCL Series	N/A
Chlorine Dilution Tank redundant high- and low-level switches	1	GEMs	CAP Series	N/A
Dilution Tank Feed Water Valve	1	TBD	TBD	TBD
Dilute Chlorine Circulation Pumps	4	TBD	TBD	TBD
Dilute Chlorine Pressure Sensors/Transmitter	3	Endress + Hauser	Cerabar PMP	N/A
Dilute Chlorine Flow Meters	3	Endress + Hauser	Promag 400	At the inlet point to each reactor Q-zone
Dilute Chlorine Shut off Valve	3	TBD	TBD	At the inlet point to each reactor Q-zone

2.7 SOURCE QUALITY CONTROL

A. Factory Testing:

1. Pump Systems: All centrifugal pump systems 100 horsepower (hp) and larger, and as specified in individual pump specification sections, shall be tested at the pump factory in accordance with the American National Standard for Centrifugal Pump Tests (ANSI/HI 1.6) or the American National Standard for Vertical Pump Tests (ANSI/HI 2.6) as approved by American National Standards Institute (ANSI) and published by the Hydraulic Institute.

2. For motors smaller than 100 hp, the Manufacturer's certified test motor shall be acceptable. For motors larger than 100 hp, tests shall be performed using the complete pump system to be furnished, including the motor. The following minimum test data shall be submitted:

   a. Hydrostatic test data.

   b. A minimum of five hydraulic test readings between shutoff head and 25 percent beyond the maximum indicated capacity, recorded on data sheets as defined by the Hydraulic Institute.

   c. Pump test data curves showing head, flowrate, bhp, and efficiency. Acceptance level shall be Grade 1U as defined by ANSI/HI 14.6.

   d. Certification that the pump horsepower demand did not exceed the rated motor hp beyond the 1.0 service rating at any point on the curve.

   e. Mechanical test data per ANSI/HI 14.6 Appendix E, including testing for vibration, lack of leakage at shaft seals, gaskets and other lubricated areas, and satisfactory operation of rotating parts at the rated pump operating conditions.

   f. Vibration test results meeting ANSI/HI 9.6.4 requirements.

3. Factory Witnessed Tests: Factory witnessed testing for this Project not required.

4. Acceptance: In the event of failure of any pump to meet any of the requirements, the Contractor and Pump Manufacturer shall make all necessary modifications, repairs, or replacements to conform to the requirements of the Contract Documents and the pump shall be retested at no additional cost to COMPANY until found satisfactory.

B. Head Lateral Analysis

1. Where specified in the individual pump sections, the pump manufacturer with system responsibility shall perform a complete head lateral analysis of each distinct pump-motor system that analyzes the head and motor combination.

2. This analysis shall include a Finite Element Analysis (FEA) to determine the natural frequencies of the above grade head and motor assembly, assuming a rigid

foundation. The analysis shall show that the natural frequencies do not encroach within plus or minus 25 percent of any normal operating speed.

C. Drive Units:

1. Test electric drive motors as specified in Division **43.**

2. Test variable-frequency drives as specified in Division 26.

3. Perform tests using complete pump system to be furnished, including Project motor and variable-frequency drive, if specified above.

4. Furnish test results to Pump Manufacturer prior to pump testing.

D. NPSH:

1. Perform test of NPSH required as required by specific pump Section.

E. Do not ship equipment until test data have been accepted by Engineer.

F. Engineer Inspection:

1. Make completed pumping system available for inspection at Manufacturer's factory prior to packaging for shipment.

2. Notify Engineer at least seven days before inspection is allowed.

G. Engineer Witnessing:

1. Allow witnessing of factory inspections and test at Manufacturer's test facility.

2. Notify Engineer at least seven days before inspections and tests are scheduled.

PART 3 EXECUTION

3.1 SERVICES OF PUMP MANUFACTURER

A. An authorized service representative of the Manufacturer shall visit the Site to witness the following and to certify in writing that the equipment and controls have been properly installed, aligned, lubricated, adjusted, and readied for operation:

1. Installation of the equipment.

2. Inspection, checking, and adjusting the equipment.

3. Startup and field testing for proper operation.

4. Performing field adjustments to ensure that the equipment installation and operation comply with requirements.

5. Requirements are more specifically detailed herein and in individual pump specifications.

B. Instruction of the COMPANY's Personnel:

1. An authorized training representative of the Manufacturer shall visit the Site to instruct the COMPANY's personnel in the operation and maintenance of the equipment, including step-by-step troubleshooting with necessary test equipment.

2. Instruction shall be specific to the models of equipment provided.

3. The Pump Manufacturer's representative shall have at least 2 years' experience in training.

4. Training shall be scheduled a minimum of 3 weeks in advance of the first session.

5. Proposed training material and a detailed outline of each lesson shall be submitted for review. Comments shall be incorporated into the material.

6. The training materials shall remain with the trainees.

7. COMPAMY may videotape the training for later use with the COMPANY's personnel.

3.2 EXAMINATION

A. Verify that designated areas, clearances, structural requirements, piping, utility connections, and electronic signals are ready to receive equipment.

3.3 PREPARATION

A. Disconnect electrical systems scheduled for removal.

B. Provide temporary wiring and connections to maintain existing systems in service during construction.

C. Remove, relocate, and extend existing installations as necessary to accommodate new construction.

3.4 INSTALLATION

A. General: Pumping equipment shall be installed in accordance with the Manufacturer's written recommendations.

B. Alignment:

1. All equipment shall be field tested to verify proper alignment, operation as specified, and freedom from binding, scraping, vibration, shaft runout, or other defects.

2. Pump drive shafts shall be measured just prior to assembly to ensure correct alignment without forcing.

3. Equipment shall be secure in position and neat in appearance.

C. Equipment Bases and Supports:

1. Provide pump bases as shown on Drawings.

2. Install anchor bolts and accessories for mounting and anchoring equipment.

D. Provide rigid anchors for pipes after vibration isolation components are installed, as specified in Section 43 05 48, Vibration and Seismic Controls for Process Gas and Liquid Handling Equipment.

E. Lubricants: Provide the necessary lubricants for initial operation, as required by individual pump sections or as recommended by the Manufacturer.

3.5 FIELD TESTS

A. Engineer shall be notified of witness field testing and shall witness portions of the testing, as determined by the Engineer.

B. Each pump system shall be field tested after installation to demonstrate satisfactory operation without excessive noise, vibration, cavitation, or overheating of bearings.

C. Test for proper alignment and freedom from binding, scraping, shaft runout, or other defects.

D. Field testing methods and allowable tolerances shall comply with current version of the Hydraulics Institute standards for the type of pumps installed.

E. The following field testing shall be conducted:

1. Startup, check, and operate the pump system over its entire speed range. Where vibration analysis and measurement are required, it shall be within the amplitude limits specified and recommended by the Hydraulic Institute Standards at a minimum of four pumping conditions defined by the Engineer.

2. Obtain concurrent readings of motor voltage, amperage, pump suction head and pump discharge head for at least four pumping conditions at each pump rotational speed. Check each power lead to the motor for proper current balance.

3. Determine bearing temperatures by contact type thermometer. A run time of at least 20 minutes shall precede this test unless insufficient liquid volume is available.

4. Electrical and instrumentation tests shall conform to the requirements of the Section under which that equipment is specified.

5. Field vibration readings shall be conducted by Engineer-selected certified testing agency, paid for by the Contractor, with readings taken at the following positions with the average not exceeding the current Hydraulic Institutes standards for the type of pump installed.

a. Measurements shall be taken at the locations as specified in the current Hydraulic Institute standards for the type of pump installed. Provide written proof of vibration readings and provide test data.

6. Sound test not to exceed 83 dbA at 3 feet from motor in any direction.

F. Field testing will be witnessed by the Engineer. The Contractor shall furnish 3 days' advance notice of field testing.

G. Equipment Acceptance:

1. Acceptance shall include a comparison of measured installed pump performance with the Manufacturer's curve values. Any discrepancy shall be resolved prior to acceptance by COMPANY.

2. Adjust, repair, modify, or replace components failing to perform as specified and rerun tests until the performance is verified.

3. Make final adjustments to equipment under direction of Manufacturer's representative.

4. After each pumping system has satisfied the requirements, the Contractor shall certify in writing that it has been satisfactorily tested and that all final adjustments have been made. Certification shall include the date of the field tests, a listing of all persons present during the tests, and the test data.

H. Contractor shall bear all costs of field tests, including additional services of the Manufacturer's representative required beyond those specified.

3.6 DEMONSTRATION

A. Demonstrate equipment startup, shutdown, routine maintenance, alarm condition responses, and emergency repair procedures to COMPANY's personnel.

END OF SECTION

SECTION 46 61 21 – ARSENIC PRESSURE FILTERS

PART 1 GENERAL

1.1 SUMMARY

A. The contractor shall furnish and install arsenic pressure filtration system as listed below.

1. One (1) skid mounted vertical pressure vessel systems consisting of two (2) trains of filters, capable of independent operation, and a total of:

   a. Two up-flow 48-inch diameter tanks with 60-inch sidewalls (one per train).

   b. Ten 48-inch diameter filters with 60-inch sidewalls (five per train).

2. Filter internals.

3. Filter media.

4. Face piping and valves.

5. Automatic backwash controls.

6. Installation inspection, start-up and training assistance.

B. Related work not included:

1. Electrical work as specified in the construction documents.

1.2 SUBMITTALS AND SHOP DRAWINGS

A. At a minimum, the following information shall be submitted by the filter manufacturer:

1. Shop drawings and catalog literature showing dimensional information, details of piping and fabrication and erection of all materials and equipment
2. Drawing of general arrangement and major system components
3. Process and Instrumentation drawing
4. System controls and control panel details including power and control, wiring diagrams, terminals, and numbers
5. Miscellaneous instrumentation and accessories
6. Installation instructions
7. Operating weight of all equipment
8. Warranty information
9. Lead time for fabrication and delivery
10. Start-up services

11. Elevation and plan views of the filter system including the location and orientation of all nozzles, manways, and connections.

1.3 REFERENCE STANDARDS

A. Except as modified or supplemented herein, design, materials, fabrication, erection, and testing of the pressure tank shall conform to the all sections of ASME Boiler and Pressure Vessel Code for Unfired Pressure Vessels. The tank shall bear the stamp of the National Board of Boiler and Pressure Vessel Inspectors and the manufacturer's number as registered with the National Board.

B. ASME B16.5 Pipe Flanges and Flanged Fittings.

C. A193/A193M Alloy-Steel and Stainless Steel Bolting Materials for High–Temperature Service.

D. A194/A194M Carbon and Alloy Steel Nuts for Bolts for High–Pressure and High–Temperature Service.

E. NACE TM-01-77 Testing of Metals for Resistance to Sulfide Stress Cracking at Ambient Temperatures.

1.4 OPERATION AND MAINTENANCE MANUALS

A. The filter manufacturer shall submit at least two (2) copies of Operation and Maintenance Manuals. One hard-copy and one electronic copy.

B. At a minimum, the following information shall be included:

1. Manufacturer’s instructions for equipment installation, startup, operation, preventative maintenance, servicing, and troubleshooting procedures.

2. Filter system data sheets and final as-built drawings of all equipment.

3. Name, address, and telephone number of factory-trained service technician.

1.5 QUALITY ASSURANCE

A. All materials in contact with drinking water shall be certified to NSF 61.

PART 2 PRODUCTS

2.1 FILTER TANKS

A. Tanks shall be of electric welded pressure vessel quality low carbon steel construction rated for 150 psig working pressure and hydrostatically tested at 100% above the

working pressure. Sidewalls shall be built of Grade A-572 steel and tank heads and hand-holes shall comply with ASME Code requirements. Sidewalls shall be at least ¼" gauge and heads shall be at least ¼" gauge.

B. Tanks shall have stainless steel grooved coupling connections on the service inlet and outlet. Manifolds shall have a flanged connection on the system inlet and outlet.

C. Access opening for tanks shall include one 11" x 15" manhole in the top head and one 8" circular access ports in lower sidewall of tank as close to lower head as possible to allow for under drain servicing or media removal.

D. Support for tanks shall be structural steel angle legs welded to lower section of the sidewall. The support and anchoring of filter vessels and accessories shall be designed by an Arizona Licensed Structural engineer, and stamped drawings must be submitted to COMPANY, and accepted by the permitting agency prior to installation of the filters.

E. Filter vessels shall be mounted to a common 4" x 6" x ¼" tubular steel frame (skid) with forklift brackets and four crane lifting hooks. Filter vessels shall be mounted so that they can be removed individually with the use of standard hand tools and a forklift or similar lifting device. The skid will be sandblasted, and epoxy coated. There will be 2" x 4" x ¼" stainless steel plates mounted on the underside of each skid to maintain a separation between the skid and the concrete floor of at least 1/8 of an inch.

F. Seismic anchorage shall be provided and integral to the filter skids. Anchors shall be placed in the general locations shown on the drawings. Anchor plates shall be welded to the skids and factory coated with the exterior coating system described in section 2, below. Provide a copy of the Arizona licensed structural engineer's report prior to shipment.

2.2 COATINGS

A. Coating, materials, application, and inspection per section 09 90 00.

2.3 INTERNAL DISTRIBUTION

A. Each train of six filters shall consist of one "up-flow" type contact vessel followed by five "down-flow" type filter.

B. Internal distribution for the down-flow filters shall be as follows:

1. Untreated water shall enter the top of the filter and flow through the filter tank and out the bottom of the tank.

2. The upper distribution system shall be of the baffle type to evenly distribute the water over the entire media surface area.

3. The lower distribution system shall be of a proven design to provide a uniform backwash flow across all the filter media. For 48-inch diameter filters, the under drain will be constructed with ten individual stainless-steel wedge wire radial outlets with openings of not more than 0.010". The radial arms shall be secured to a stainless-steel hub-base by nipples threaded into stainless steel pipe couplings welded to the hub. Each radial arm shall have adequate outlet orifices for the stated flow located beneath the wedge wire (the specific design requirement is that each arm be capable of handling 37.5 gpm of water with a pressure loss not to exceed 2 psig). The distribution system shall be embedded in a layer sub-fill of 3/8" x 3/4" washed gravel topped with 2” of #8 garnet or gravel to support the filter bed.

2.4 MAIN OPERATING VALVES

A. The main operating valve on each tank shall be an industrial automatic multi-port diaphragm type, slow opening and closing, free of water hammer. The diaphragm assembly shall be fully guided on its perimeter when pressure activated from one position to another to assure a smooth reliable shut-off without sticking. There shall be no contact of dissimilar metals within the valve and no special tools shall be required to service the valve. The valve shall be capable of being operated pneumatically. The operating pressure shall be equal to the filter inlet system pressure. Main operating valves shall be Bermad IR-350A. Substitutions will not be allowed.

B.

2.5 PIPE AND FITTINGS

A. Raw, finished, and backwash water manifolds and piping shall be Schedule 40 steel with a wall thickness of 0.25 inches or greater. Pipe sizes shall be as shown on the plans. Immersed portions of manifolds shall be coated with ScotchKote 134, certified to ANSI/NSF Standard 61 in the same manner specified for filter vessels in Section 2, above except that manifolds with diameters smaller than 3" may be made of Type 316L stainless steel and left uncoated.

B. Tubing between the main operating valves and the pilot control valves shall be ¼” OD and rated for 300 psi as manufactured by Parker or approved equal.

2.6 FLOW CONTROL

A. An adjustable backwash flow control valve and a backwash flow meter shall be included. The backwash flow meter must read instantaneous flow within the range of expected backwash flows and must have a 4-20 mA output signal. Backwash flow will be provided internally to the system (i.e. no additional flow from the well or distribution system shall be used during backwash). Proper filter bed fluidization during backwashing shall be required.

2.7 CONTROLS

A. A factory-mounted and wired cycle controller shall incorporate an adjustable time switch with multi-ported pilot valves to control all steps of automatic backwash. Provision for push-button initiated backwash shall be included, as will provisions to accommodate remote initiation of backwash. The controller to be used is an Alex-Tronic F-12, or similar, which requires a 120 VAC connection which provides a local panel indication of backwash status and alarm.

B. The multi-ported pilot control valve shall be pre-connected to automatically pressure activate the operating control valve through the steps of backwash and return to service. The control panel shall always indicate the cycle of operation. In case of power failure, a complete backwash cycle can be performed by manual operation of the pilot control valve.

C. Electrical lockouts to prevent more than one unit from backwashing at the same time, except when the system is manually overridden are included.

D. Electrical time switch control shall be fully adjustable to initiate backwash at regular frequencies from hourly to once every 48 hours and at a set pressure differential. The capability for backwash, initiated from a remote location, by an electrical signaling device shall be included.

2.8 FILTER MEDIA

A. The filter media shall be NSF/ANSI Standard 61 listed as a manganese dioxide media of at least 12.5% MnO2, suitable for use over a silica sand substrate. The size of the media shall be 16 to 44 US Mesh (18 to 45 ASTM). The media have a bulk density as packed of 84 lb/ft3 and a density of 170 lb/ft3, suitable for a pH range between 5.5 to 10 standard units and adsorption capacity of greater than 1000 mg/kg for <Mn and greater than 10,000 mg/kg for Fe. Backwashing flow rate required to get 20% to 30% bed expansion during backwashing based on a backwash flow rate between 12 to 18 gpm/ft2. Alternative media will not be accepted unless the equipment supplier demonstrates with an independent pilot test that the media will meet the treatment requirements. Arsenic shall be removed to a level below 70% of the established maximum contaminant level (MCL). Particle retention shall be ten (10) micron and larger for particles other than iron, manganese, or arsenic.

B. Manufacturer: Pyrolox by Vibrantz Technologies.

C. Each filter shall be provided with gravel under-bedding to cover the hub and lateral underdrain including an 1/8” x 1/16” barrier gravel between the gravel and the catalytic filter media.

D. The media layers shall be graded as follows.

Layer	Depth	Size	CF required (total/per vessel) 12-54”	CF required (total/per vessel) 16-48”
Bottom	Cover Underdrain	½” x ¼”	108/9	112/7
Second	3”	¼” x 1/8”	48/4	56/3.5
Third	3”	1/8” x 1/16”	48/4	56/3.5
Top	42”	Manganese dioxide-based media	672/56	704/44

E. The gravel shall be free from clay, loam, dirt, calcareous or other foreign material and shall consist of round or sub-angular particles being relatively free of flat or elongated particles.

F. The gravel shall be shipped bagged for field installation by the General Contractor. The bottom layer of the screened support gravel shall be placed by hand to avoid damage to the underdrain diffusers. Each layer shall be placed and leveled before the installation of the next layer is started.

2.9 ACCESSORIES

A. Liquid filled pressure gauges with +/- 0.5 % full scale accuracy in corrosion resistant frames shall be provided (0-100 psig) for inlet and outlet manifold of the system. Gauges shall be 4½" in diameter with integral surge suppression snubbers and will be mounted above the control panel.

B. Sampling ports shall be provided for the product water from each filter vessel as well as composite sampling ports for raw and finished water. A sampling port shall also be included for sampling backwash effluent.

C. One pressure relief valve shall be provided.

D. One site glass will be provided for the backwash discharge line.

E. An air relieve valves shall be provided on the inlet piping header.

F. Control valves shall be provided on the influent, effluent, and backwash supply lines for each train, for a total of six (6) control valves.

2.10 OPERATING REQUIREMENTS

A. Each filter system shall consist of up-flow contactors and down-flow vertical pressure filters (two up-flow contactors and ten down-flow filters), factory assembled, pre-piped and wired, skid mounted for installation. The filter shall successfully achieve the

performance listed below when operated at the design water flow rates of 230 gpm and 470 gpm. The normal design conditions are summarized in the table below for 48".

Table 1. Equipment Design Criteria Summary	Up-Flow Contactors	Down-Flow Filters
Plant Capacity (gpm/train)	230	230
Operating Pressure, psig	45	45
Run Time (hours/day)	24	24
Average Day Run Time (hours/day)	12	12
Vertical Pressure Filters		
Diameter of Vessels, ft	4	4
Surface areas, per vessel, sq ft		12.3
Number of Vessels per Train	1	5
Loading Rate, gpm/sq ft		x
Media Depth, in	-	42
Total Media, Cubic ft	-	344
Total Media Weight, lbs	-	25,788
Backwash		
Backwash Flow Rate, Each Vessel, gpm	-	192
Backwash Frequency, Hrs	-	24
Backwash Duration, min	-	5
Total Backwash Volume, Gal/BackWash/Train	-	4,800
Number of Backwashes Per Day	-	1
Backwash % of Production	-	x%

B. Raw water quality:

The expected water quality is shown in Table 2.

Table 2. Expected Water Quality	Well 1	Well 3
Operating Flow (gpm)	230	240
Raw Water Quality		
pH, S.U.		
Temperature, ^{o}C		
Total Dissolved Solids, mg/L		
Total Hardness, mg/L as $CaCO_3$		
Iron, Total, mg/L		
Manganese, Total, mg/L		
Calcium, mg/L		
Alkalinity, mg/L as $CaCO_3$		
Silica, mg/L		
Chloride, mg/L		

Arsenic, µg/L		
Treated Water Quality Objectives		
Minimum Free Chlorine Residual, mg/L	>0.5	>0.5
Maximum Arsenic, µg/L	<	<

C. It is the responsibility of the system manufacturer to select and size all components of the treatment system. The component sizes shall meet or exceed those given herein.

2.11 SAMPLE COCKS

A. Sampling ports shall be provided so that representative water samples may be secured at the following points: untreated inlet water, treated filter effluent (both combined and for each filter), and backwash waste outlet.

PART 3 EXECUTION

3.1 INSTALLATION AND STARTUP

A. The General Contractor shall provide all field labor and equipment for installation of the filter system on a constructed or existing concrete foundation. The filter manufacturer shall deliver the system to the site and the General Contractor shall unload, assemble, and install the complete filtration system including the filter skids (six – two (2) vessel skids), media, piping, valves, and accessories. Electrical and mechanical connections to the equipment and any instruments or monitoring devices shall be provided by an Electrical Contractor subcontracted by the General Contractor as specified elsewhere.

B. All site piping shall be flushed and disinfected prior to input into the water treatment equipment. The general contractor shall be responsible for disinfection of the media, face piping, and pressure vessels prior to initiating full start-up.

C. The filter manufacturer shall provide the services of a factory trained Field Representative for a period of up to five (5) days over a minimum of two (2) trips including two (2) days for delivery and installation inspection, three (3) days for start-up and for operator training. All laboratory analysis during the startup period will be provided by COMPANY.

D. All startup and/or disinfection chemicals shall be provided and disposed of by the General Contractor.

END OF SECTION

SECTION 46 61 63 – BAG FILTERS

PART 1 GENERAL

1.1 SUMMARY

A. Section Includes: Bag filters and accessories.

B. Definitions:

1. SS316: Type 316 stainless steel.
2. NSF: National Sanitation Foundation

C. Reference Standards:

1. NSF 61 - Drinking Water System Components - Health Effects.
2. NSF 372 - Drinking Water System Components - Lead Content

D. Related Requirements:

1. Section 01 10 00 – Summary of Work: Requirements for sequencing.
2. Section 01 30 00 - Administrative Requirements: Requirements for coordination and scheduling.
3. Section 01 32 16 - Construction Progress Schedule: Requirements for scheduling.
4. Section 01 40 00 - Quality Requirements: Requirements for inspecting and testing.
5. Section 01 70 00 - Execution and Closeout Requirements: Requirements for demonstration and training.
6. Section 40 23 23 - Potable Water Process Piping: Piping materials and installation as required for this Section.

1.2 COORDINATION

A. Coordinate Work of this Section with COMPANY.

1.3 SEQUENCING

A. Sequence Work to prevent interference with COMPANY's operations.

1.4 SCHEDULING

A. Schedule Work of this Section after finishing concrete work for housekeeping pad and prior to connecting piping work.

1.5 SUBMITTALS

A. Submittals for this section are subject to the re-evaluation fee identified in Article 4 of the General Conditions.

B. Manufacturer’s installation instructions shall be provided along with product data.

C. Submittals shall be provided in the order in which they are specified and tabbed (for combined submittals).

D. Product Data: Submit manufacturer information for system materials and component equipment, including electrical characteristics.

E. Shop Drawings:

1. Indicate system materials and component equipment.
2. Submit installation and anchoring requirements, fasteners, and other details.

F. Manufacturer's Certificate: Certify that products meet or exceed specified requirements.

G. Manufacturer Instructions: Submit detailed instructions on installation requirements, including storage and handling procedures.

H. Source Quality-Control Submittals: Indicate results of shop or factory tests and inspections.

I. Field Quality-Control Submittals: Indicate results of Contractor-furnished tests and inspections.

J. Manufacturer Reports: Certify that equipment has been installed according to manufacturer instructions.

K. Qualifications Statements:

1. Submit qualifications for manufacturer and installer.
2. Submit manufacturer's approval of installer.

1.6 CLOSEOUT SUBMITTALS

A. Project Record Documents: Record actual locations of installed bag filters.

1.7 QUALITY ASSURANCE

A. Materials in Contact with Potable Water: Certified to NSF Standard 61 and NSF Standard 372.

B. Maintain one copy of each standard affecting Work of this Section on Site.

1.8 QUALIFICATIONS

A. Manufacturer: Company specializing in manufacturing products specified in this Section with minimum three years' documented experience.

B. Installer: Company specializing in performing Work of this Section and documentation with approval by manufacturer.

1.8 DELIVERY, STORAGE, AND HANDLING

A. Inspection: Accept materials on Site in manufacturer's original packaging and inspect for damage.

B. Store materials according to manufacturer instructions.

C. Protection:

1. Protect materials from moisture and dust by storing in clean, dry location remote from construction operations areas.
2. Provide additional protection according to manufacturer instructions.

1.9 EXISTING CONDITIONS

A. Field Measurements:

1. Verify field measurements prior to fabrication.
2. Indicate field measurements on Shop Drawings.

1.10 WARRANTY

A. Furnish manufacturer's warranty for bag filter housings: 12 months after startup or 18 months after the date of shipment, whatever comes later.

PART 2 PRODUCTS

2.1 BAG FILTERS

A. Manufacturers:

1. FIL-TREK

2. Or equal.

a. Equivalent request must be submitted and approved at the time of bid.

B. Description: Nitrate Reactors Pre-filter.

1. Bag Filter:

a. Type: Welded.

b. Quantity of Bags: 6 bags/housing

c. Bag Size: 2 (diameter 7.06 inches and length 32 inches).

d. Bag Surface Area: 4.5 sq. ft.

e. Nominal Rating: 5 microns.

2. Housing:

a. Quantity of Housings: two (2)

b. Diameter: 23 5/16 inches.

c. Overall Height: 55 11/16 inches.

d. Inlet and Outlet Connections: Flanged.

e. Vent Connection: Threaded.

f. Gage Connection: Threaded.

3. Sample Ports:

a. Minimum two (2) per unit: Influent sample and effluent sample.

b. Design and Placement: According to manufacturer's standard.

C. Description: Backwash Recycle Pre-filter.

1. Bag Filter:

a. Type: Welded.

b. Quantity of Bags: 1 bag/housing

c. Bag size: 2 (diameter 7.06 inches and length 32 inches).

d. Bag Surface Area: 4.5 sq. ft

e. Nominal Rating: 10 microns.

2. Housing:

a. Quantity of Housings: two (2).

b. Diameter: 6 1/2 inches.

c. Overall Height: 52 3/16 inches.

d. Inlet and Outlet Connections: Flanged.

e. Vent Connection: Threaded.

f. Gage Connection: Threaded.

3. Sample Ports:

a. Minimum two (2) per unit: Influent sample and effluent sample.

b. Design and Placement: According to manufacturer's standard.

D. Performance and Design Criteria: Nitrate Reactors Pre-filter.

1. Flow Capacity:

a. Design: 230 gpm/housing.

b. Maximum: 125 gpm/filter bag or 750 gpm/housing

c. Size each online and standby unit to treat entire stream.

2. Flow Conditions: Intermittent.
3. Process Fluid:
    a. Temperature Range: 70 to 86 deg. F
    b. Design Temperature: 78 deg. F
    c. Product Viscosity: 1.9 x 10^{-5} lbf-s/sq. ft
4. Differential Pressure at Design Temperature: 15 psi.
5. pH:
    a. Maximum: 9.
    b. Minimum: 7.
6. Design Inlet:
    a. Maximum Pressure: 150 psig.
    b. Suspended Solids: 5 mg/L.
    c. Particle Size: >1.5 microns.
7. Design Effluent:
    a. Suspended Solids: 1 mg/L.
    b. Particle Size: <5 microns.

E. Performance and Design Criteria: Backwash Recycle Pre-filter.
1. Flow Capacity:
    a. Design: 23 gpm/housing.
    b. Maximum: 125 gpm/filter bag or 125 gpm/housing
    c. Size each online and standby unit to treat entire stream.
2. Flow Conditions: Intermittent.
3. Process Fluid:
    a. Temperature Range: 43-102 deg. F.
    b. Design Temperature: 77 deg. F
    c. Product Viscosity: 1.9 x 10^{-5} lbf-s/sq. ft
4. Differential Pressure at Design Temperature: 15 psi.
5. pH:

a. Maximum: 9.

b. Minimum: 7.

6. Design Inlet:

a. Maximum Pressure: 150 psig

b. Suspended Solids: 10 mg/L.

c. Particle Size: >1.5 microns.

7. Design Effluent:

a. Suspended Solids: 3 mg/L.

b. Particle Size: <10 microns.

F. Materials: Nitrate Reactors Pre-filter and Backwash Recycle Pre-filter.

1. Filter: Mera Felt Polypropylene.

2. Gasket: Buna.

3. Bag Support: SS316.

4. Housing: SS316.

5. Shell O-Ring: Buna.

2.2 SOURCE QUALITY CONTROL

A. Provide shop inspection and testing of completed assembly.

B. Director's Inspection:

1. Make completed bag filter assemblies available for inspection at manufacturer's factory prior to packaging for shipment.
2. Notify Director's Representative at least **seven** days before inspection is allowed.

C. Director's Witnessing:

1. Allow witnessing of factory inspections and test at manufacturer's test facility.
2. Notify Director's Representative at least **seven** days before inspections and tests are scheduled.

D. Certificate of Compliance:

1. If manufacturer is approved by authorities having jurisdiction, submit certificate of compliance indicating Work performed at manufacturer's facility conforms to Contract Documents.
2. Specified shop tests are not required for Work performed by approved manufacturer.

PART 3 EXECUTION

3.1 INSTALLATION

A. According to manufacturer instructions.

B. Installation Standards: Install Work according to COMPANY standards.

3.2 FIELD QUALITY CONTROL

A. After installation, inspect and test for proper operation.

B. Equipment Acceptance:

1. Adjust, repair, modify, and replace components of system failing to perform, and repeat tests.

2. Make final adjustments to equipment under direction of Manufacturer's representative.

C. Manufacturer Services: Furnish services of Manufacturer's representative experienced in installation of products furnished under this Section for not less than two (2) days on-Site for installation, inspection, field testing, and instructing COMPANY's personnel in maintenance of equipment.

D. Furnish installation certificate from Equipment Manufacturer's representative attesting equipment has been properly installed and is ready for startup and testing.

3.3 DEMONSTRATION

A. Demonstrate system control functions and alarms.

B. Demonstrate equipment startup, shutdown, routine maintenance, and emergency repair procedures to Director's Representative.

3.4 ATTACHMENTS

A. Bag Filter Schedule:

1. Nitrate Reactors Pre-filter, BF-1:

a. Manufacturer: FIL-TREK.
b. Model: S6LP18-312-6F-B-150.
c. Type: LP SERIES.
d. Location: Nitrate Reactors Pre-filter.
e. Process Fluid: Water.
f. Material: SS316.
g. Flow Capacity: 750 GPM.

2. Backwash Recycle Pre-filter, BF-2:

a. Manufacturer: FIL-TREK.

b. Model: S6SL112-2F-CDB-150.
c. Type: SL-Series.
d. Location: Backwash Recycle Pre-filter.
e. Process Fluid: Water.
a. Material: SS316.
b. Flow Capacity: 125 GPM.

END OF SECTION

SECTION 46 33 83 - CHEMICAL FEED SAFETY EQUIPMENT

PART 1 GENERAL

1.1 SUMMARY

A. Section Includes:

1. Personal protective equipment.
2. Emergency showers.
3. Emergency eye and face washers.
4. Emergency combination showers with eye and face washers.

1.2 REFERENCE STANDARDS

A. American National Standards Institute:

1. ANSI Z87.1 - American National Standard for Occupational and Educational Personal Eye and Face Protection Devices.
2. ANSI Z358.1 - American National Standard for Emergency Eyewash and Shower Equipment.

B. ASME International:

1. ASME B46.1 - Surface Texture (Surface Roughness, Waviness, and Lay).

C. National Electrical Manufacturers Association:

1. NEMA 250 - Enclosures for Electrical Equipment (1000 Volts Maximum).

D. UL:

1. UL 508 - Industrial Control Equipment.

1.3 SUBMITTALS

A. Section 01 33 00 - Submittal Procedures: Requirements for submittals.

B. Product Data:

1. Submit Manufacturer information for drive assemblies, pumps, tanks, mixers, panels, and other system components.
2. Submit schematics, diagrams, panel layouts, ladder diagrams, and sequence of operation.

C. Shop Drawings:

1. Indicate assembly, foundation, and installation with location.
2. Indicate critical dimensions, sizes, and support locations.

D. Manufacturer's Certificate: Certify that products meet or exceed specified requirements.

E. Manufacturer Instructions: Submit special procedures and assembly of components.

F. Source Quality-Control Submittals: Indicate results of factory tests and inspections.

G. Field Quality-Control Submittals: Indicate results of Contractor-furnished tests and inspections.

H. Manufacturer Reports: Certify that equipment has been installed according to Manufacturer instructions.

1.4 MAINTENANCE MATERIAL SUBMITTALS

A. Section 01 70 00 - Execution and Closeout Requirements: Requirements for maintenance materials.

1.5 QUALITY ASSURANCE

A. Perform Work according to COMPANY's standards.

B. Safety showers shall be installed according to OSHA standards.

1.6 DELIVERY, STORAGE, AND HANDLING

A. Inspection: Accept materials on Site in Manufacturer's original packaging and inspect for damage.

B. Store materials according to Manufacturer instructions.

C. Protection:

1. Protect materials from moisture and dust by storing in clean, dry location remote from construction operations areas.

2. Provide additional protection according to Manufacturer instructions.

1.7 EXISTING CONDITIONS

A. Field Measurements:

1. Verify field measurements prior to fabrication.

2. Indicate field measurements on Shop Drawings.

1.8 WARRANTY

A. Section 01 70 00 - Execution and Closeout Requirements: Requirements for warranties.

PART 2 PRODUCTS

2.1 PERFORMANCE AND DESIGN CRITERIA

A. Corrosion Resistance: Furnish materials resistant to corrosive attacks from process chemicals being handled.

2.2 PIPING CONNECTIONS

A. Flexible Connections:

1. Provide flexible connectors in piping connections to vibrating equipment.
2. Harness or anchor flexible connectors as necessary.

2.3 SAFETY EQUIPMENT

A. Signage:

1. Safety shower signage

a. Text: As required by OSHA and ANSI Z358.1.
b. Size and Materials: As required by code.

2.4 EMERGENCY SHOWERS:

2.5 EMERGENCY EYE AND FACE WASHERS:

2.6 EMERGENCY COMBINATION SHOWERS WITH EYE AND FACE WASHERS:

A. Shower:

1. Comply with ANSI Z358.1.

2. Mounting: Freestanding.

3. Description: Self-cleaning and non-clogging.

4. Shower Head:

a. Material: Plastic.

b. Diameter: 8 inches.

5. Furnish instant-action stay-open valve actuated by rigid stainless-steel pull rod.

B. Eyewash:

1. Eyewash shall be part of shower and eyewash assembly.

2. Comply with ANSI Z358.1.

3. Bowl: Plastic, with elbow.

4. Valve:

a. Type: Instant action, stay open.
b. Actuation: Push flag or foot pedal.

5. Furnish twin spray heads with dust cover.

C. Pedestal:

1. Material: Galvanized-steel pipe.
2. Diameter: 1-1/4 inches
3. Furnish floor flange of same material as pedestal.
4. Furnish and install hot dip galvanized floor anchors as required by the supplier.

D. Furnish emergency signage as required by code.

E. Finish: Corrosion-resistant coating.

F. Color: To be selected by OWNER during shop drawing submittals.

G. Manufacturers:

1. Bradley
2. Encon
3. Guardian
4. Haws
5. Speakman
6. Or equal.

2.7 SOURCE QUALITY CONTROL

A. Section 01 40 00 - Quality Requirements: Requirements for testing, inspection, and analysis.

PART 3 EXECUTION

3.1 EXAMINATION

A. Section 01 70 00 - Execution and Closeout Requirements: Requirements for installation examination.

B. Verify that designated areas, clearances, structural requirements, piping, utility connections, and electronic signals are ready to receive equipment.

3.2 PREPARATION

A. Section 01 70 00 - Execution and Closeout Requirements: Requirements for installation preparation.

B. Disconnect electrical systems scheduled for removal.

C. Provide temporary wiring and connections to maintain existing systems in service during construction.

D. Remove, relocate, and extend existing installations as necessary to accommodate new construction.

3.3 INSTALLATION

A. Per Drawings and according to Manufacturer instructions.

3.4 FIELD QUALITY CONTROL

A. Section 01 40 00 - Quality Requirements: Requirements for inspecting and testing.

B. Section 01 70 00 - Execution and Closeout Requirements: Requirements for testing, adjusting, and balancing.

C. Inspect for proper alignment.

D. Equipment Acceptance:

1. Adjust, repair, modify, or replace components failing to perform as specified and rerun tests.

2. Make final adjustments to equipment under direction of Manufacturer's representative.

E. Furnish installation certificate from equipment Manufacturer's representative attesting that equipment has been properly installed and is ready for startup and testing.

3.5 DEMONSTRATION

A. Section 01 70 00 - Execution and Closeout Requirements: Requirements for demonstration and training.

B. Demonstrate equipment startup, shutdown, routine maintenance, alarm condition responses, and emergency repair procedures to COMPANY's personnel.

END OF SECTION

Page left intentionally blank.

STANFIELD WELLS
NO. 1 AND NO. 3 ARSENIC AND NITRATE TREATMENT IMPROVEMENTS
SW 1/4 SEC. 20, T. 6 SOUTH., R. 4 EAST. OF THE G. & S. R. B. & M.

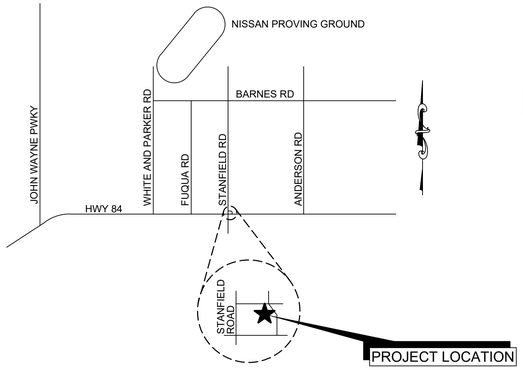

VICINITY MAP
N.T.S.

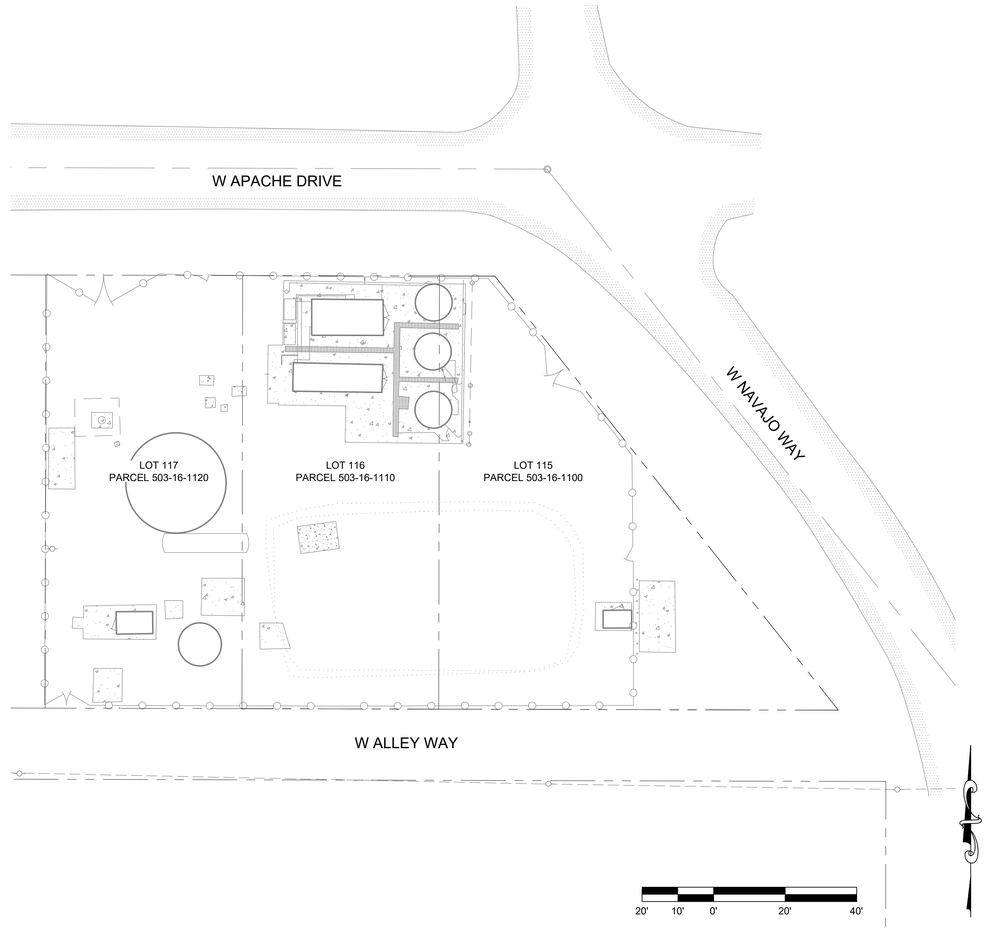

OWNER
ARIZONA WATER COMPANY
POST OFFICE BOX 29006
PHOENIX, AZ 85038-9006 VOICE:
(602) 240-6860 FAX: (602)
294-2169 CONTACT: THERESA
LAU
EMAIL: TLAU@AZWATER.COM

CIVIL AND PROCESS ENGINEER
CONSOR
2432 W. PEORIA AVE
SUITE 1246
PHOENIX, AZ 85029
PHONE: (602) 906-1901
CONTACT: FREDERICK TACK
EMAIL: FREDERICK.TACK@CONSORENG.COM

STRUCTURAL ENGINEER
GFT
3838 CENTRAL AVE
SUITE 900
PHOENIX, AZ 85012
PHONE: (602) 553-8817
CONTACT: STEPHANIE TEMPLETON
EMAIL: STEMPLETON@GFTINC.COM

ELECTRICAL ENGINEER
DARCOR
22601 N. 17TH AVE
SUITE 140
PHOENIX, AZ 85027 PHONE: (602)
795-2699
CONTACT: JORGE GERARDO
EMAIL: JGERARDO@DARCORINC.COM

PROPERTY INFORMATION
ADDRESS:
36781 W APACHE DR STANFIELD, AZ 85172

FEMA FIRM PANEL:
04021C1150E, DATED DECEMBER 4, 2007. ZONE X

PARCELS:
503-16-1120 APN (AREA=6,659.95 SF)
503-16-1110 APN (AREA=6,659.95 SF)
503-16-1100 APN (AREA=7,698.24 SF)

ADEQ APPROVAL
FILE No.

DATE

PINAL COUNTY ENGINEER APPROVAL
APPROVED BY:

PINAL COUNTY ENGINEER DATE
PINAL COUNTY, PUBLIC WORKS DEPARTMENT
APPROVAL EXPIRES: DATE

RE-APPROVED BY:

PINAL COUNTY ENGINEER DATE
PINAL COUNTY, PUBLIC WORKS DEPARTMENT
APPROVAL EXPIRES: DATE

BASIS OF BEARING
STREET MONUMENT LINE FOR APACHE DRIVE BETWEEN STANFIELD ROAD AND NAVAJO WAY, AS SHOWN IN, BOOK 06 PAGE 017 OF THE PINAL COUNTY RECORDS. SAID LINE BEARS S89°51'00"E, 445.00'.

BENCHMARK
PINAL COUNTY CONTROL POINT ID: 604191
FOUND 3" BRASS CAP IN HAND HOLE
NAVD 88' ELEVATION = 1303.68'

REFERENCE DOCUMENTS
1. BK. 6, PG. 17, PCR
2. FEE NO. 2013-004698, PCR

consor

REVISIONS

NO	DATE	BY	DESCRIPTION
A	10/3/25	FT	30% SUBMITTAL
B	12/1/225	FT	60% SUBMITTAL
C	03/03/26	FT	90% SUBMITTAL

The installation shown is to be installed in accordance with the Arizona Water Company standard specifications on file with the Arizona Department of Environmental Quality

Blue Stake, Inc. Arizona 811 at least two full working days before you dig, call 8-1-1 or visit azbluestake.com

W.A. No.: | P.E. No.:
SYSTEM:
LEGAL DESC.:
TAX DIST.: | SIB No.:
DATE: 03/03/2026 | SCALE: AS SHOWN
DRAWN BY: JLC | REVIEWED BY: SDC | CHECKED BY: FHT

ARIZONA WATER COMPANY
3805 N. BLACK CANYON HWY. POST OFFICE BOX 29006
PHOENIX, ARIZONA 85038-9006
(602) 240-6860

PROJECT DESC.: STANFIELD GWS&T USBR GRANT COORDINATION
PROJECT SHEET DESC.: COVER SHEET

DWG. No.: G-001
SHEET 1 OF 80

Drawing Path and Name: C:\Users\derek.cloud\DC\ACCDocs\Consor\Stanfield GWS&T USBR Grant Coordination\Project Files\1-Design\01-GEN\1-SHEETS\W242167AZ.00_G-001.dwg, Plotted Date: March 9, 2026 1:31 PM By: Derek Cloud

SHEET INDEX

SHT NO	DWG NAME	DESCRIPTION
GENERAL		
1	G-000	COVER SHEET
2	G-001	SHEET INDEX, SYMBOLS, AND LEGEND
3	G-003	ABBREVIATIONS
4	G-004	ENGINEER NOTES
5	G-005	ARIZONA WATER COMPANY NOTES
6	G-006	PROCESS FLOW DIAGRAM 1
7	G-007	PROCESS FLOW DIAGRAM 2
8	G-008	HYDRAULIC PROFILE 1
9	G-009	HYDRAULIC PROFILE 2
10	G-010	PROCESS DESIGN AND OPERATIONAL CRITERIA
CIVIL		
11	C-001	CIVIL SYMBOLS AND LEGEND
12	C-010	EXISTING SITE PLAN AND SURVEY CONTROL
13	C-011	DEMOLITION AND SITE PREPARATION PLAN - EQUIPMENT
14	C-012	DEMOLITION AND SITE PREPARATION PLAN - SURFACES AND PIPES
15	C-100	OVERALL SITE PLAN
16	C-101	
17	C-110	PAVING, GRADING, AND DRAINAGE PLAN
18	C-120	HORIZONTAL CONTROL PLAN
19	C-301	SITE CROSS SECTIONS
20	C-302	SITE CROSS SECTIONS
21	C-303	SECTIONS
22	C-501	DEMOLITION AND SITE PREPARATION DETAILS
23	C-502	DETAILS
24	C-503	DETAILS
25	C-504	DETAILS
26	C-505	DETAILS
LANDSCAPE		
27	L-100	LANDSCAPE PLAN AND DETAILS
STRUCTURAL		
28	S-001	LEGEND, NOTES, DESIGN CRITERIA, AND INSPECTIONS
29	S-100	OVERALL SITE PLAN
30	S-111	CHEMICAL STORAGE PLAN
31	S-112	DEWATERING PLAN
32	S-113	SHADE CANOPY PLAN
33	S-401	ENLARGED PAD PLANS AND ELEVATIONS
34	S-402	ELEVATIONS
35	S-403	DEWATERING VAULT ELEVATIONS
36	S-501	SHADE CANOPY DETAILS
37	S-502	PAD DETAILS
38	S-503	CHEMICAL STORAGE DETAILS
39	S-504	PIPE SUPPORT DETAILS
PROCESS (PIPING)		
40	D-001	LEGEND AND NOTES
41	D-010	FLOW DIAGRAM
42	D-100	OVERALL SITE PLAN
43	D-110	WELL CONNECTION AND BY-PASS STATION PLAN
44	D-120	NITRATE TREATMENT SYSTEM PLAN
45	D-130	NITRATE TREATMENT EFFLUENT TANK AND BOOSTER PUMP STATION PLAN
46	D-140	ARSENIC TREATMENT FILTRATION SYSTEM PLAN
47	D-150	RECYCLE PUMP STATION PLAN
48	D-160	DEWATERING BIN PLAN
49	D-170	TREATMENT CHEMICAL SYSTEM PLAN
50	D-180	TANK CONNECTION PLAN
51	D-501	DETAILS
52	D-520	NITRATE TREATMENT SYSTEM DETAILS
53	D-530	NITRATE TREATMENT EFFLUENT TANK AND BOOSTER PUMP STATION DETAILS
54	D-540	ARSENIC TREATMENT FILTRATION SYSTEM DETAILS
55	D-550	RECYCLE PUMP STATION DETAILS
56	D-560	DEWATERING BIN DETAILS
57	D-570	TREATMENT CHEMICAL SYSTEM DETAILS
58	D-580	TANK CONNECTION DETAILS
59	D-900	OVERALL SITE ISOMETRIC
ELECTRICAL		
60	E-001	LEGEND, NOTES, AND ABBREVIATIONS
61	E-100	DEMOLITION PLAN
62	E-100	OVERALL SITE PLAN
63	E-110	LIGHTING PLAN - 1
64	E-111	LIGHTING PLAN - 2
65	E-201	EQUIPMENT ELEVATIONS
66	E-401	ENLARGED BUILDING PLAN
67	E-402	ENLARGED PLAN - 1
68	E-403	ENLARGED PLAN - 2
69	E-404	ENLARGED PLAN - 3
70	E-405	ENLARGED PLAN - 4
71	E-406	ENLARGED PLAN - 5
72	E-501	DETAILS
73	E-502	DETAILS
74	E-601	ONELINE DIAGRAMS
75	E-610	PANEL SCHEDULES
76	E-620	CONDUIT AND CONDUCTOR SCHEDULE - 1
77	E-621	CONDUIT AND CONDUCTOR SCHEDULE - 2
78	E-630	CONTROL SCHEMATICS - 1
79	E-631	CONTROL SCHEMATICS - 2
80	E-632	CONTROL SCHEMATICS - 3
INSTRUMENTATION		
81	I-001	LEGEND AND NOTES
82	I-501	DETAILS
83	I-601	PROCESS AND INSTRUMENTATION DIAGRAM - 1
84	I-602	PROCESS AND INSTRUMENTATION DIAGRAM - 2
85	I-603	PROCESS AND INSTRUMENTATION DIAGRAM - 3
86	I-604	PROCESS AND INSTRUMENTATION DIAGRAM - 4
87	I-605	PROCESS AND INSTRUMENTATION DIAGRAM - 5
88	I-606	PROCESS AND INSTRUMENTATION DIAGRAM - 6
89	I-607	PROCESS AND INSTRUMENTATION DIAGRAM - 7
90	I-610	BLOCK DIAGRAMS AND PANEL LAYOUT

SHEET INDEX DESIGNATIONS

DISCIPLINE DESIGNATOR
SHEET TYPE DESIGNATOR
SHEET SEQUENCE NUMBER (2 DIGIT)

A - N N N

DISCIPLINE DESIGNATORS

G	GENERAL
C	CIVIL
L	LANDSCAPE
A	ARCHITECTURAL
S	STRUCTURAL
D	PROCESS
M	MECHANICAL (HVAC)
E	ELECTRICAL
I	INSTRUMENTATION AND P&IDS

SHEET TYPE DESIGNATORS

0	GENERAL
1	PLAN VIEWS
2	ELEVATIONS
3	SECTIONS
4	LARGE SCALE VIEWS
5	DETAILS
6	SCHEDULES AND DIAGRAMS
7	USER DEFINED
8	USER DEFINED
9	3D REPRESENTATION

MATERIAL PATTERNS

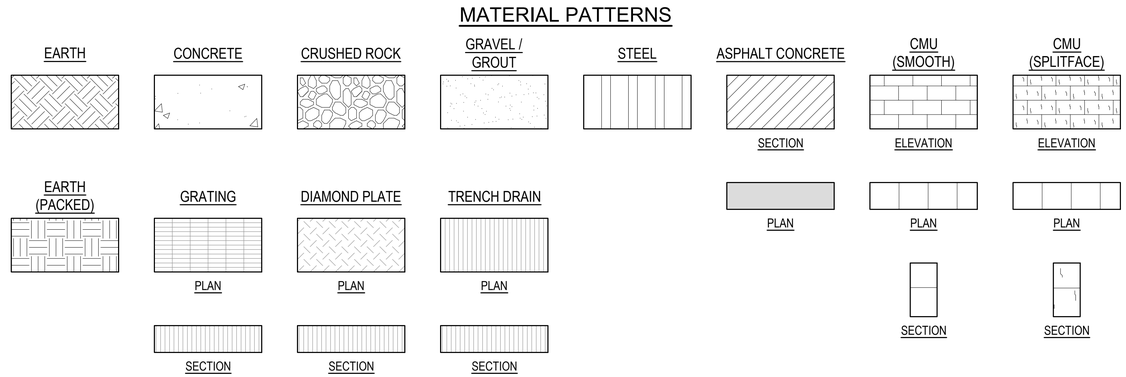

VIEW TITLE DESIGNATIONS

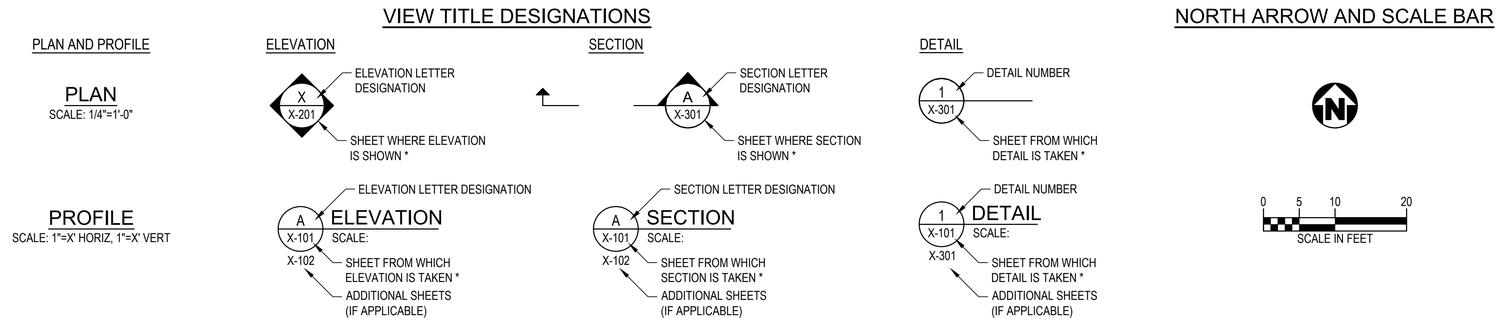

* NOTE: IF PLAN AND SECTION FOR DETAIL CALL-OUT AND DETAIL ARE SHOWN ON THE SAME DRAWING, DRAWING NUMBER IS REPLACED WITH A DASH.

NORTH ARROW AND SCALE BAR

GENERAL NOTE:

1. THIS IS A STANDARD GENERAL SHEET, NOT ALL OF THE INFORMATION SHOWN MAY BE USED ON THIS PROJECT.

consor

REVISIONS

NO	DATE	BY	DESCRIPTION
A	10/3/25	FT	30% SUBMITTAL
B	12/12/25	FT	60% SUBMITTAL
C	03/03/26	FT	90% SUBMITTAL

The installation shown is to be installed in accordance with the Arizona Water Company standard specifications on file with the Arizona Department of Environmental Quality

Revised as Shown ### at least one hour working after notified by Arizona Blue Stake, Inc. (602) 263-1100

P.E. No.:
W.A. No.:
SYSTEM:
LEGAL DESC.:
TAX DIST.:
SIB No.:
DATE: 03/03/2026
SCALE: AS SHOWN
DRAWN BY: JLC
REVIEWED BY: SDC
CHECKED BY: FHT

ARIZONA WATER COMPANY
3805 N. BLACK CANYON HWY. POST OFFICE BOX 29006
PHOENIX, ARIZONA 85038-9006
(602) 240-6860

PROJECT DESC.: STANFIELD GWS&T USBR GRANT COORDINATION
PROJECT SHEET DESC.: SHEET INDEX, SYMBOLS, AND LEGENDS

DWG. No.: G-002
SHEET 2 OF 80

Drawing Path and Name: C:\Users\derek.cloud\DC\ACCDocs\Consor\Stanfield GWS&T USBR Grant Coordination\Project Files\1-Design\01-GEN\1-SHEETS\W242167AZ.00_G-002.dwg, Plotted Date: March 9, 2026 1:36 PM By: Derek Cloud

@	AT
AASHTO	AMERICAN ASSOCIATION OF STATE HIGHWAY & TRANSPORTATION OFFICIALS
AB	ANCHOR BOLT
ABAN(D)	ABANDON(ED)
ABS	ACRYLONITRILE BUTADIENE STYRENE
ABV	ABOVE / ALCOHOL BY VOLUME
AC	ASPHALTIC CONCRETE
ACP	ASPHALTIC CONCRETE PAVING
ADJ	ADJUSTABLE
ADJC	ADJACENT
AFF	ABOVE FINISHED FLOOR
AFG	ABOVE FINISHED GRADE
AHR	ANCHOR
AL	ALUMINUM
ALT	ALTERNATE
AMP	AMPERE
ANSI	AMERICAN NATIONAL STANDARDS INSTITUTE
APPROX	APPROXIMATE
APPVD	APPROVED
APWA	AMERICAN PUBLIC WORKS ASSOCIATION
ARCH	ARCHITECTURAL
ARV	AIR RELEASE VALVE
ASCE	AMERICAN SOCIETY OF CIVIL ENGINEERS
ASR	AQUIFER STORAGE & RECOVERY
ASSN	ASSOCIATION
ASSY	ASSEMBLY
ASTM	AMERICAN SOCIETY FOR TESTING & MATERIALS
ATM	ATMOSPHERE
AUTO	AUTOMATIC
AUX	AUXILIARY
AVE	AVENUE
AVG	AVERAGE
AWWA	AMERICAN WATER WORKS ASSOCIATION
B&S	BELL & SPIGOT
BC	BOLT CIRCLE
BD	BOARD
BETW	BETWEEN
BF	BOTH FACE
BFD	BACKFLOW PREVENTION DEVICE
BFILL	BACKFILL
BFV	BUTTERFLY VALVE
BHP	BRAKE HORSEPOWER
BKGD	BACKGROUND
BLDG	BUILDING
BLK	BLOCK
BLVD	BOULEVARD
BM	BENCHMARK / BEAM
BMP	BEST MANAGEMENT PRACTICES
BO	BLOW-OFF
BOC	BACK OF CURB
BS	BOTH SIDES
BSMT	BASEMENT
BTF	BOTTOM FACE
BTU	BRITISH THERMAL UNIT
BV	BALL VALVE
BW	BOTH WAYS
C	CELSIUS
C TO C	CENTER TO CENTER
CARV	COMBINATION AIR RELEASE VALVE
CATV	CABLE TELEVISION
CB	CATCH BASIN
CCP	CONCRETE CYLINDER PIPE
CCW	COUNTER CLOCKWISE
CDOT	COLORADO DEPARTMENT OF TRANSPORTATION
CFM	CUBIC FEET PER MINUTE
CFS	CUBIC FEET PER SECOND
CHAN	CHANNEL
CHEM	CHEMICAL
CHFR	CHAMFER
CHKV	CHECK VALVE
CIPC	CAST IN PLACE CONCRETE
CISP	CAST IRON SOIL PIPE
CJ	CONSTRUCTION JOINT
CL OR C/L	CENTER LINE
CL2	CHLORINE
CLG	CEILING
CLJ	CONTROL JOINT
CLR	CLEAR
CLSM	CONTROLLED LOW STRENGTH MATERIAL
CMP	CORRUGATED METAL PIPE
CMU	CONCRETE MASONRY UNIT
CND	CONDUIT
CO	CLEANOUT
COL	COLUMN
COMB	COMBINATION
CONC	CONCRETE
CONN	CONNECTION
CONST	CONSTRUCTION
CONT	CONTINUOUS / CONTINUATION
CONTR	CONTRACT(OR)
COORD	COORDINATE
COP	COPPER
CORP	CORPORATION
CORR	CORRUGATED
CP	CONTROL POINT
CPLG	COUPLING
CPVC	CHLORINATED POLYVINYL CHLORIDE
CR	CRUSHED ROCK
CS	COMBINED SEWER
CSP	CONCRETE SEWER PIPE
CT	COURT
CTR	CENTER
CU	CUBIC OR SEE PIPE MATERIAL LIST
CULV	CULVERT
CV	CONTROL VALVE
CW	CLOCKWISE / COLD WATER
CY	CUBIC YARDS
CYL	CYLINDER LOCK
D	DRAIN
DC	DIRECT CURRENT
DEFL	DEFLECTION
DEMO(D)	DEMOLISH(ED)
DEQ	DEPARTMENT OF ENVIRONMENTAL QUALITY
DET	DETAIL
DIA	DIAMETER
DIM	DIMENSION
DIR	DIRECTION
DIST	DISTANCE
DN	DOWN
DR	DRIVE
DS	DOWNSPOUT
DWG	DRAWING
DWL	DOWEL
DWV	DRAIN WASTE AND VENT
DWY	DRIVEWAY
E / ELEC	ELECTRICAL
EA	EACH
ECC	ECCENTRIC
EF	EACH FACE
EL	ELEVATION
ELB	ELBOW
ENCL	ENCLOSURE
EOP	EDGE OF PAVEMENT
EQ	EQUAL
EQL SP	EQUALLY SPACED
EQUIP	EQUIPMENT
ESMT	EASEMENT
EW	EACH WAY
EXC	EXCAVATE
EXIST	EXISTING
EXP	EXPANSION
EXP BT	EXPANSION BOLT
EXP JT	EXPANSION JOINT
EXT	EXTERIOR
F	FAHRENHEIT
F TO F	FACE TO FACE
FAB	FABRICATE
FB	FLAT BAR
FCA	FLANGED COUPLING ADAPTER
FCO	FLOOR CLEANOUT
FD	FLOOR DRAIN
FDN	FOUNDATION
FEXT	FIRE EXTINGUISHER
FF	FINISHED FLOOR / FAR FACE
FGL	FIBERGLASS
FH	FIRE HYDRANT
FIN	FINISH(ED)
FIPT	FEMALE IRON PIPE THREAD
FITG	FITTING
FL	FLOOR LINE
FLEX	FLEXIBLE
FLG	FLANGE
FLL	FLOW LINE
FLR	FLOOR
FM	FORCE MAIN
FO	FIBER OPTIC
FOC	FACE OF CONCRETE
FOF	FACE OF FINISH
FOM	FACE OF MASONRY
FOS	FACE OF STUDS
FPM	FEET PER MINUTE
FPS	FEET PER SECOND
FRP	FIBERGLASS REINFORCED PLASTIC
FT	FEET / FOOT
FTG	FOOTING
FUT	FUTURE
FXTR	FIXTURE
G	GAS
GA	GAUGE
GAL	GALLON
GALV	GALVANIZED
GC	GROOVED COUPLING
GFA	GROOVED FLANGE ADAPTER
GI	GALVANIZED IRON
GIP	GALVANIZED IRON PIPE
GJ	GRIP JOINT
GL	GLASS
GLV	GLOBE VALVE
GND	GROUND
GPD	GALLONS PER DAY
GPH	GALLONS PER HOUR
GPM	GALLONS PER MINUTE
GPS	GALLONS PER SECOND
GR	GRADE
GR LN	GRADE LINE
GRTG	GRATING
GV	GATE VALVE
GRVL	GRAVEL
GYP	GYPSUM
HB	HOSE BIBB
HC	HOLLOW CORE
HDR	HEADER
HDWE	HARDWARE
HGR	HANGER
HGT	HEIGHT
HH	HANDHOLD
HM	HOLLOW METAL
HMAC	HOT MIX ASPHALT CONCRETE
HNDRL	HANDRAIL
HOA	HAND-OFF-AUTO
HOR	HAND-OFF-REMOTE
HORIZ	HORIZONTAL
HP	HIGH PRESSURE / HORSEPOWER
HPG	HIGH PRESSURE GAS
HPT	HIGH POINT
HR	HOUR
HSB	HIGH STRENGTH BOLT
HV	HOSE VALVE
HVAC	HEATING, VENTILATION, AIR CONDITIONING
HWL	HIGH WATER LINE
HWY	HIGHWAY
HYD	HYDRANT
HYDR	HYDRAULIC
I&C	INSTRUMENTATION & CONTROL
IAW	IN ACCORDANCE WITH
ID	INSIDE DIAMETER
IE	INVERT ELEVATION
IF	INSIDE FACE
IMPVT	IMPROVEMENT
IN	INCH
INCC	INCLUDE(D)(ING)
INFL	INFLUENT
INJ	INJECTION
INSTL	INSTALLATION
INSUL	INSULATION
INTER	INTERCEPTOR
INTR	INTERIOR
INV	INVERT
IP	IRON PIPE
IPT	IRON PIPE THREAD
IR	IRON ROD
IRRIG	IRRIGATION
JT	JOINT
JUNC	JUNCTION
KPL	KICK PLATE
KVA	KILOVOLT AMPERE
KW	KILOWATT
KWY	KEYWAY
L	LENGTH
LAB	LABORATORY
LAV	LAVATORY
LB	POUND
LF	LINEAR FOOT
LIN	LINEAL
LN	LANE
LOC	LOCATION
LONG	LONGITUDINAL
LP	LOW PRESSURE
LPT	LOW POINT
LRG	LARGE
LS	LONG SLEEVE / LUMP SUM
LT	LEFT
LVL	LEVEL
LWL	LOW WATER LINE
MAN	MANUAL
MAT	MATERIAL
MAX	MAXIMUM
MCC	MOTOR CONTROL CENTER
MCP	MASTER CONTROL PANEL
MECH	MECHANICAL
MET	METAL
MFR	MANUFACTURER
MGD	MILLION GALLONS PER DAY
MH	MANHOLE
MIN	MINIMUM
MIPT	MALE IRON PIPE THREAD
MISC	MISCELLANEOUS
MJ	MECHANICAL JOINT
MON	MONUMENT / MONOLITHIC
MOT	MOTOR
MP	MILEPOST
MSL	MEAN SEAL LEVEL
MTD	MOUNTED
NA	NOT APPLICABLE
NAVD	NORTH AMERICAN VERTICAL DATUM
NC	NORMALLY CLOSED
NF	NEAR FACE
NIC	NOT IN CONTRACT
NO / NO.	NORMALLY OPEN / NUMBER
NOM	NOMINAL
NORM	NORMAL
NRS	NON-RISING STEM
NTS	NOT TO SCALE
O TO O	OUT TO OUT
OC	ON CENTER
OD	OUTSIDE DIAMETER
OF	OVERFLOW / OUTSIDE FACE
OPNG	OPENING
OPP	OPPOSITE
ORIG	ORIGINAL
OSHA	OCCUPATIONAL SAFETY AND HEALTH ADMINISTRATION
OVHD	OVERHEAD
P&ID	PROCESS & INSTRUMENTATION DIAGRAM
PC	POINT OF CURVE
PCC	POINT OF COMPOUND CURVE
PCVC	POINT OF CURVATURE ON VERTICAL CURVE
PE	PLAIN END
PERF	PERFORATED
PERM	PERMANENT
PERP	PERPENDICULAR
PG	PRESSURE GAUGE
PH	PIPE HANGER
PI	POINT OF INTERSECTION
PIVC	POINT OF INTERSECTION ON VERTICAL CURVE
PL OR P/L	PROPERTY LINE / PLATE / PLASTIC
PLBG	PLUMBING
PNL	PANEL
POC	POINT OF CURVATURE
POLY	POLYETHYLENE
PP	POWER POLE / PURPLE PIPE
PRC	POINT OF REVERSE CURVATURE
PRCST	PRECAST
PREP	PREPARATION
PRESS	PRESSURE
PRKG	PARKING
PROP	PROPOSED
PRV	PRESSURE REDUCING VALVE
PS	PUMP STATION
PSIG	POUNDS PER SQUARE INCH GAUGE
PSL	PIPE SLEEVE
PSPT	PIPE SUPPORT
PT	POINT OF TANGENCY
PTVC	POINT OF TANGENCY ON VERTICAL CURVE
PTW	PUMP TO WASTE
PUE	PUBLIC UTILITY EASEMENT
PV	PLUG VALVE
PVMT	PAVEMENT
PW	POTABLE WATER
PWR	POWER
QTY	QUANTITY
RAD	RADIUS
RC	REINFORCED CONCRETE
RCP	REINFORCED CONCRETE PIPE
RD	ROAD / ROOF DRAIN
RDCR	REDUCER
REF	REFERENCE
REINF	REINFORCE(D)(ING)(MENT)
REQ'D	REQUIRED
RESTR	RESTRAINED
RFCA	RESTRAINED FLANGE COUPLING ADAPTER
RM	ROOM
RND	ROUND
RO	ROUGH OPENING
R/W	RIGHT-OF-WAY
RPBPD	REDUCED PRESSURE BACKFLOW PREVENTION DEVICE
RPM	REVOLUTIONS PER MINUTE
RR	RAILROAD
RST	REINFORCED STEEL
RT	RIGHT
SALV	SALVAGE
SAN	SANITARY
SC	SOLID CORE
SCHED	SCHEDULE
SD	STORM DRAIN
SDL	SADDLE
SDR	STANDARD DIMENSION RATIO
SECT	SECTION
SHLDR	SHOULDER
SHT	SHEET
SIM	SIMILAR
SLP	SLOPE
SLV	SLEEVE
SOLN	SOLUTION
SP	SAMPLE PORT
SPCL	SPECIAL
SPEC(S)	SPECIFICATION(S)
SPG	SPACING
SPL	SPOOL
SPRT	SUPPORT
SQ	SQUARE
SQ FT	SQUARE FOOT
SQ IN	SQUARE INCH
SQ YD	SQUARE YARD
SS	SANITARY SEWER
SST	STAINLESS STEEL
ST	STREET
STA	STATION
STD	STANDARD
STOR	STORAGE
STR	STRAIGHT
STRUCT	STRUCTURE / STRUCTURAL
SUBMG	SUBMERGED
SUCT	SUCTION
SV	SOLENOID VALVE
S/W	SIDEWALK
SWD	SIDEWATER DEPTH
SWGR	SWITCH GEAR
SYMM	SYMMETRICAL
SYS	SYSTEM
T OR TEL	TELEPHONE
T&B	TOP & BOTTOM
TAN	TANGENCY
TB	THRUST BLOCK
TBD	TO BE DETERMINED
TBM	TEMPORARY BENCHMARK
TC	TOP OF CONCRETE / TOP OF CURB
TCE	TEMPORARY CONSTRUCTION EASEMENT
TDH	TOTAL DYNAMIC HEAD
TEMP	TEMPERATURE / TEMPORARY
T&G	TONGUE & GROOVE
THK	THICK / THICKNESS
THRD	THREAD (ED)
THRU	THROUGH
TP	TEST PIT / TOP OF PAVEMENT / TURNING POINT
TRANS	TRANSITION
TSP	TRI-SODIUM PHOSPHATE
TST	TOP OF STEEL
TW	TOP OF WALL
TYP	TYPICAL
UG	UNDERGROUND
UH	UNIT HEATER
UN	UNION
UON	UNLESS OTHERWISE NOTED
USGS	UNITED STATES GEOLOGIC SURVEY
V	VENT / VOLT
VAC	VACUUM
VB	VACUUM BREAKER
VBOX	VALVE BOX
VC	VERTICAL CURVE
VERT	VERTICAL
VFD	VARIABLE FREQUENCY DRIVE
VOL	VOLUME
VCP	VITRIFIED CLAY PIPE
VTR	VENT THROUGH ROOF
W	WATER
W/	WITH
W/IN	WITHIN
W/O	WITHOUT
W/W	WALL TO WALL
WD	WOOD
WF	WIDE FLANGE
WH	WATER HEATER
WI	WROUGHT IRON
WM	WATER METER
WP	WORKING POINT / WATERPROOFING
WS	WATER SERVICE
WT	WEIGHT
WTP	WATER TREATMENT PLANT
WTRT	WATERTIGHT
WWF	WELDED WIRE FABRIC
WWTF	WASTEWATER TREATMENT FACILITY
WWTP	WASTEWATER TREATMENT PLANT
X SECT	CROSS SECTION
XFMR	TRANSFORMER
YD	YARD DRAIN / YARD
YH	YARD HYDRANT
YR	YEAR
ZN	ZINC

GENERAL NOTE:

1. THESE ARE STANDARD ABBREVIATIONS, NOT ALL OF THESE MAY BE USED ON THIS PROJECT.

WATER MAIN MATERIALS ABBREVIATION REFERENCE:

CA - CEMENT ASBESTOS

PVC - POLYVINYL CHLORIDE

CLC - CEMENT LINED AND COATED STEEL

CU - COPPER

STL - STEEL

CI - CAST IRON

DI - DUCTILE IRON

HDPE - HIGH DENSITY POLYETHYLENE

GS - GALVANIZED STEEL

REVISIONS

NO	DATE	BY	DESCRIPTION
A	10/3/25	FT	30% SUBMITTAL
B	12/12/25	FT	60% SUBMITTAL
C	03/03/26	FT	90% SUBMITTAL

The installation shown is to be installed in accordance with the Arizona Water Company standard specifications on file with the Arizona Department of Environmental Quality

Registered Professional Engineer (Civil)
CERTIFICATE NO. 36 24 067
STATE OF ARIZONA
Date signed 03/03/26
Not valid for other purposes or documents

W.A. No.:
SYSTEM:
LEGAL DESC.:
TAX DIST.:
P.E. No.:
SB6 No.:
DATE: 03/03/2026
SCALE: AS SHOWN
DRAWN BY: JLC
REVIEWED BY: SDC
CHECKED BY: FHT

ARIZONA WATER COMPANY
3805 N. BLACK CANYON HWY. POST OFFICE BOX 29006
PHOENIX, ARIZONA 85038-9006
(602) 240-6860

PROJECT DESC.: STANFIELD GWS&T USBR GRANT COORDINATION

PROJECT SHEET DESC.: ABBREVIATIONS

consor

DWG. No.: G-003

SHEET OF 80

Drawing Path and Name: C:\Users\derek.cloud\DC\ACCDocs\Consor\Stanfield GWS&T USBR Grant Coordination\Project Files\1-Design\01-GEN\1-SHEETS\W242167AZ.00_G-003.dwg. Plotted Date: March 9, 2026 1:37 PM By: Derek Cloud

GENERAL NOTES

1. ALL CONSTRUCTION OPERATIONS ARE TO BE ACCOMPLISHED IN ACCORDANCE WITH APPLICABLE STATE STATUES AND OSHA REGULATIONS.
2. ALL WORK SHALL COMPLY WITH THE CURRENT LOCAL AGENCY STANDARDS AND REQUIREMENTS.
3. THE CONTRACTOR SHALL SCHEDULE WORK IN SUCH A MANNER AS TO AVOID UNNECESSARY INCONVENIENCE TO THE OWNER OR THE PUBLIC.
4. THE CONTRACTOR SHALL BE RESPONSIBLE FOR THE PROTECTION OF ALL SURVEY MONUMENTS AND CORNER MARKERS. SURVEY MONUMENTS AND PROPERTY CORNER MARKERS DAMAGED BY CONSTRUCTION ACTIVITIES SHALL BE REESTABLISHED BY A REGISTERED PROFESSIONAL SURVEYOR LICENSED IN THE STATE IN WHICH THE WORK IS BEING PERFORMED.
5. CONTRACTOR SHALL MAINTAIN THE JOB SITE IN A SAFE, NEAT, AND WORKMANLIKE MANNER AT ALL TIMES. JOB SITE SAFETY SHALL NOT BE COMPROMISED.
6. DIMENSIONS TO STRUCTURES, REFERENCED PIPING, PAVING, AND OTHER IMPROVEMENTS ARE APPROXIMATE. THE CONTRACTOR SHALL FIELD VERIFY ALL DIMENSIONS AND CONDITIONS 14 DAYS IN ADVANCE OF THE CONSTRUCTION PROGRESS.
7. STRUCTURES SUCH AS CURBS AND GUTTERS, CONCRETE AND ASPHALT DRIVES AND WALKWAYS, PAVING BRICKS, FENCING, RETAINING WALLS, SIGNS, POSTS, MARKERS, ETC., CROSSED BY A UTILITY THAT ARE NOT INDICATED IN THE PLANS SHALL BE RESTORED BY THE CONTRACTOR TO PRECONSTRUCTION CONDITIONS.
8. THE CONTRACTOR SHALL BE RESPONSIBLE FOR ANY DAMAGE TO EXISTING ROADS, BUILDINGS, OR OTHER STRUCTURES RESULTING FROM THE CONTRACTOR'S CONSTRUCTION ACTIVITIES. REPAIRS SHALL BE MADE TO PRECONSTRUCTION CONDITIONS.
9. CONTRACTOR IS RESPONSIBLE FOR OBTAINING ALL APPLICABLE PERMITS REQUIRED TO PERFORM THE WORK IN ACCORDANCE WITH THE CONTRACT DOCUMENTS.
10. THE CONTRACTOR SHALL BE RESPONSIBLE FOR ESTABLISHING STAGING AREAS REQUIRED TO PERFORM THE WORK.
11. THE CONTRACTOR SHALL MAINTAIN DRIVEWAY ACCESS TO ALL ADJOINING PROPERTIES ACCESSIBLE TO THE PUBLIC AND EMERGENCY VEHICLES. DESIGNS FOR MAINTAINING ACCESS WILL BE PREPARED BY THE CONTRACTOR AND SUBMITTED TO THE CONTROLLING AGENCY FOR THE REVIEW AND APPROVAL.
12. CONTRACTOR SHALL COMPLY WITH THE TRENCH PLATE REQUIREMENTS OF THE GOVERNING JURISDICTION. IF TRENCH PLATE REQUIREMENTS ARE NOT SPECIFIED, THE CONTRACTOR SHALL APPLY SKID RESISTANT COATING ON THE TRENCH PLATES AND COLD MIX ASPHALT CONCRETE TO THE EDGES. THE TRENCH PLATES SHALL BE NOTCHED INTO THE ASPHALT CONCRETE OR TRAVELED SURFACE TO PREVENT SLIPPAGE AND ROCKING UNDER TRAFFIC.
13. THE CONTRACTOR SHALL COMPLY WITH ALL FEDERAL, STATE, COUNTY, AND LOCAL LAWS AND ORDINANCES RELATING TO THE SAFETY AND CHARACTER OF WORK, EQUIPMENT, AND PERSONNEL. THIS INCLUDES, BUT IS NOT LIMITED TO SHEETING, SHORING, BRACING, VENTILATION, CONFORMANCE WITH TRAFFIC CONTROL AND MAINTENANCE OF BARRICADES AND WARNING DEVICES.
14. CONTRACTOR SHALL KEEP COMPLETE AND ACCURATE RECORD DRAWINGS OF THE WORK, UTILITY POTHOLE DATA, AND EXISTING CONDITIONS THAT HAVE CHANGED OR ARE DIFFERENT THAN SHOWN ON THE PLANS. UPON COMPLETION OF THE WORK, THE CONTRACTORS RECORD DRAWINGS SHALL BE SUBMITTED TO THE OWNER.
15. CONTRACTOR IS RESPONSIBLE FOR PROTECTING AND MAINTAINING ALL STORM DRAIN PIPES, STORM WATER FEATURES, OR DRAINAGE FACILITIES FROM DAMAGE DURING ALL STAGES OF CONSTRUCTION.
16. ALL EXISTING PAVEMENT MARKINGS AND SIGNAGE DISTURBED DURING CONSTRUCTION SHALL BE REPLACED BY CONTRACTOR AT NO EXPENSE TO OWNER.
17. CONTRACTOR WILL BE RESPONSIBLE FOR OBTAINING THE WATER FOR ALL PROJECT-RELATED ACTIVITIES INCLUDING BUT NOT LIMITED TO CONSTRUCTION, DUST CONTROL, TESTING, AND DISINFECTION. THE CONTRACTOR WILL BE RESPONSIBLE FOR COORDINATING WITH OWNER TO TAP EXISTING MAINS AND BRINGING WATER TO THE SITE.
18. CONTRACTOR WILL BE RESPONSIBLE FOR DEVELOPMENT OF A CONSTRUCTION STORMWATER POLLUTION PREVENTION PROGRAM. CONTRACTOR IS RESPONSIBLE FOR OBTAINING THE CONSTRUCTION PERMIT AND COMPLYING WITH ALL ASPECTS OF THE PERMIT.
19. NO POWER IS CURRENTLY AVAILABLE AT THE SITE. CONTRACTOR IS RESPONSIBLE FOR PROVIDING ALL POWER NEEDED FOR CONSTRUCTION.
20. THE CONTRACTOR SHALL RESTORE THE SITE GRADING AND DRAINAGE TO PRECONSTRUCTION CONDITIONS.

GENERAL PIPELINE NOTES:

1. ALL OPEN TRENCHES, WORK AREA, AND SHAFTS SHALL BE SLOPED OR HAVE A SHORING SYSTEM IN ACCORDANCE WITH OSHA, STATE, AND LOCAL REQUIREMENTS.
2. SCHEDULE TIE-INS IN ACCORDANCE WITH THE SEQUENCING REQUIREMENTS OF THE CONTRACT. SCHEDULE AND COORDINATE TIE-INS AROUND THE OWNER'S OPERATIONAL REQUIREMENT AND LIMITATION.
3. THE CONTRACTOR IS RESPONSIBLE FOR ARRANGING FOR REQUIRED INSPECTION. THE PRESENCE OR ABSENCE OF THE INSPECTOR WILL NOT RELIEVE THE CONTRACTOR OF FULL RESPONSIBILITY FOR THE PROPER PERFORMANCE OF THE WORK.

EXISTING UTILITY NOTES:

1. UTILITY LOCATIONS SHOWN ON PLANS ARE CONSIDERED APPROXIMATE ONLY. NO ELEVATIONS ARE SHOWN, AND NO INFORMATION WAS AVAILABLE DURING THE DESIGN PERIOD.
2. THE CONTRACTOR SHALL VERIFY LOCATION AND DEPTHS OF EXISTING UTILITIES BY CONTACTING ALL UTILITIES, AGENCIES, AND SUBSURFACE UTILITY LOCATING SERVICES (811). IN ADVANCE OF EXCAVATION, CONTRACTOR SHALL USE ALL EXISTING UTILITIES AND STRUCTURES ADJACENT TO THE WORK AREA, WHETHER INDICATED ON THE DRAWINGS OR NOT. SURVEY AND ACCURATELY RECORD THE LOCATIONS AND ELEVATIONS OF THE UTILITY CROSSINGS ON THE RECORD DRAWINGS. PREPARE AND SUBMIT THE UTILITY FIELD SURVEY INFORMATION TO THE OWNER FOR REVIEW ON A MONTHLY BASIS DURING THE COURSE OF CONSTRUCTION. SUBMITTAL SHALL INCLUDE UTILITIES SURVEYED THAT MONTH AND ASSOCIATED VERTICAL ELEVATIONS AND HORIZONTAL LOCATIONS (NORTHING AND EASTING COORDINATES) AND A LIST OF UTILITIES SURVEYED TO DATE. ALL COMPILED IN MICROSOFT EXCEL SPREADSHEET FORMAT. CONTRACTOR SHALL BE RESPONSIBLE FOR COORDINATING WITH THE UTILITY AGENCY THE PROTECTION, REMOVAL, RECONSTRUCTION, AND/OR RECONNECTION OF EXISTING FACILITIES AS REQUIRED TO COMPLETE THE WORK. CONTRACTOR SHALL NOTIFY CONSTRUCTION MANAGER IMMEDIATELY OF ANY POTENTIAL UTILITY CONFLICTS.
3. SUPPORT ALL EXISTING UTILITIES AT CROSSING LOCATIONS. PROTECT EXISTING UTILITIES RUNNING PARALLEL TO CONSTRUCTED TRENCHES FROM DAMAGE CAUSED BY THE REMOVAL OF ADJACENT MATERIALS.
4. SOME UTILITY SERVICES MAY NOT BE SHOWN ON THE DRAWINGS. THE CONTRACTOR SHALL TAKE NECESSARY MEASURES TO LOCATE AND PROTECT SERVICE DURING CONSTRUCTION.
5. PRIOR TO CONSTRUCTION OF ANY NEW PIPELINE THAT TIES INTO AN EXISTING UTILITY, EXPOSE AND VERIFY LOCATION AND ELEVATION OF THE TIE-IN POINT. CONFIRM THE EXISTING PIPE MATERIAL AND ANY OTHER INFORMATION REQUIRED BY THE DRAWINGS. SURVEY AND ACCURATELY RECORD THE LOCATION AND ELEVATION OF THE TIE-IN POINT ON THE RECORD DRAWINGS.
6. BEFORE CONSTRUCTION IS STARTED, CONTRACTOR SHALL COORDINATE WITH THE OWNER OF EACH UTILITY AND DEFINE THE REQUIREMENTS AND METHODS TO ACCOMMODATE THE PROTECTION, TEMPORARY SUPPORT, ADJUSTMENT, OR RELOCATION OF ANY UTILITIES AFFECTED BY THE PROPOSED WORK.
7. CONTRACTOR IS RESPONSIBLE FOR COSTS INCURRED AS A RESULT OF UTILITY RELOCATIONS PERFORMED FOR THE CONTRACTOR'S CONVENIENCE.

PINAL COUNTY GENERAL NOTES

1. ALL WORK AND MATERIALS SHALL CONFORM TO CURRENT COUNTY HEALTH DEPARTMENT STANDARDS AND REVISIONS, ARIZONA WATER COMPANY SPECIFICATIONS AND DETAILS, MAG STANDARD SPECIFICATIONS AND DETAILS, AND ARIZONA DEPARTMENT OF HEALTH SERVICES ENGINEERING BULLETIN NO. 10.
2. DEVELOPER SHALL OBTAIN A PINAL COUNTY RIGHT OF WAY USE PERMIT PRIOR TO ANY WORK BEING PERFORMED WITHIN THE COUNTY RIGHT-OF-WAY. CONTACT PINAL COUNTY PUBLIC WORKS INSPECTION SECTION AT LEAST SEVEN (7) WORKING DAYS.
3. PRIOR TO CONSTRUCTION, THE APPROPRIATE AGENCY(IES) WILL BE NOTIFIED AS REQUIRED BY THE PERMITS.
4. ALL BACKFILL, COMPACTION, AND TESTING SHALL BE PER CURRENT COUNTY, CITY, STATE, ADOT AND ARIZONA WATER COMPANY STANDARDS AND SPECIFICATIONS.
5. ALL WATER LINES 8" AND LESS ARE TO HAVE A MINIMUM COVER OF 36 INCHES & ALL WATER LINES 12" AND GREATER ARE TO HAVE 48 INCHES OF MINIMUM COVER OVER THE TOP OF PIPE TO FINISH GRADE, UNLESS OTHERWISE SPECIFIED ON THE CONSTRUCTION DRAWINGS.
6. ALL FRAMES, COVERS, VALVE BOXES, AND MANHOLE COVERS SHALL BE ADJUSTED TO FINISH GRADE PRIOR TO COMPLETION OF CONSTRUCTION. (IF LOCATED OUTSIDE PAVEMENT SECTION, PREFER LEVEL WITH FINISHED GRADE BUT ALLOW 6" MAX ABOVE FINISHED GRADE.)
7. ALL WATER LINES SHALL BE PRESSURE AND LEAKAGE TESTED IN ACCORDANCE WITH ARIZONA WATER COMPANY'S SPECIFICATIONS.
8. ALL WATER LINES ARE TO BE DISINFECTED PER ADEQ ENGINEERING BULLETIN NO. 8.
9. AIR RELEASE VALVES ARE REQUIRED AT WATER SYSTEM HIGH POINTS PER ARIZONA WATER COMPANY STANDARD DETAILS.
10. WATER/SEWER SEPARATION SHALL BE PER CURRENT ARIZONA WATER COMPANY STANDARDS ADEQ AAC R18-5-502-C.
11. IT SHALL BE THE CONTRACTORS RESPONSIBILITY TO UNCOVER ALL EXISTING WATER LINES BEING CONNECTED TO, AND TO VERIFY THE LOCATION, DEPTH AND SIZE OF PIPE BEFORE ANY CONSTRUCTION BEGINS.
12. ANY CONSTRUCTION PERFORMED WITHOUT THE KNOWLEDGE OF THE INSPECTOR OR HIS REPRESENTATIVE IS LIABLE FOR REMOVAL AND REPLACEMENT AT THE CONTRACTORS EXPENSE.
13. IN ACCORDANCE WITH AAC R18-4-213, ALL MATERIALS ADDED AFTER JANUARY 1, 1993 WHICH MAY COME IN CONTACT WITH DRINKING WATER, SHALL CONFORM TO NATIONAL SANITATION FOUNDATION STANDARDS 60 AND 61.
14. ALL WATER SERVICES SHALL BE SET A MINIMUM OF 2 FEET ON THE CUSTOMERS PROPERTY AND NOT IN THE RIGHT-OF-WAY.
15. UNLESS OTHERWISE SPECIFIED ON THE CONSTRUCTION DRAWINGS, ALL WATER MAINS ARE TO BE INSTALLED 5 FEET FROM THE PROPERTY LINE INSIDE THE RIGHT-OF-WAY OR EASEMENT.
16. WATER VALVES SHALL BE SPACED NOT MORE THAN 500 FEET IN COMMERCIAL DISTRICTS AND NOT MORE THAN 800 FEET IN OTHER DISTRICTS. VARIATIONS MAY BE REQUIRED FOR TRANSMISSION MAINS OR SPECIAL APPLICATIONS. SUFFICIENT VALVING IS REQUIRED WHERE WATER LINES CROSS STREAMS, RAILROADS AND MAJOR HIGHWAYS.
17. CONTRACTOR IS RESPONSIBLE FOR BLUE STAKE MARKING DAILY AS CONSTRUCTION IS IN PROGRESS.
18. ALL RESIDENTS TO BE NOTIFIED IN PERSON 24 HOURS PRIOR TO DRIVEWAY CROSSING.
19. TRAFFIC CONTROL AND BARRICADING SHALL BE ACCORDING TO THE MANUAL ON UNIFORM TRAFFIC CONTROL DEVICES OR PINAL COUNTY REQUIREMENTS. CONTRACTOR TO SUPPLY LIGHTED BARRICADE AT 50' INTERVALS WITH OPEN TRENCH SIGNAGE.
20. CONTRACTOR SHALL SUBMIT A TRAFFIC CONTROL PLAN TO PINAL COUNTY PUBLIC WORKS INSPECTION SECTION AT LEAST THREE (3) WORKING DAYS PRIOR TO WORK FOR REVIEW AND APPROVAL.
21. ANY WORK ON ARTERIAL OR COLLECTOR ROADS SHALL REQUIRE AN OFF-DUTY PINAL COUNTY SHERIFF'S OFFICER FOR TRAFFIC CONTROL. CONTACT SHALL BE MADE THROUGH PCSO REPRESENTATIVE.
22. NO TRENCH TO BE LEFT OPEN/UNCOVERED AFTER WORKING HOURS UNLESS PROPERLY SIGNED AND BARRICADED PER THE APPROVED TRAFFIC CONTROL PLAN.
23. PLAN APPROVAL IS VALID FOR (12) MONTHS FROM THE DATE OF COUNTY APPROVAL. IF APPROVAL EXPIRES, THE PLANS MUST BE RESUBMITTED TO PINAL COUNTY PUBLIC WORKS FOR UPDATE REVIEW AND RE-APPROVAL.
24. TRENCH EXCAVATION, BACK FILLING AND COMPACTION SHALL BE PER MAG STANDARD SPECIFICATIONS SECTION 601. BEDDING SHALL BE SPECIFICALLY PER MAG STANDARD SPECIFICATIONS 601.4.2 AND 601.4.6.
25. ALL WORK REQUIRED TO COMPLETE THE CONSTRUCTION COVERED BY THESE PLANS SHALL BE IN ACCORDANCE WITH ARIZONA WATER COMPANY SPECIFICATIONS AND MAG STANDARD SPECIFICATIONS AND DETAILS.
26. ALL COMPONENTS MUST COMPLY WITH SDWA'S "LEAD FREE" STANDARDS AND CONFORM TO AWWA OR ASTM STANDARDS.
27. BACKFLOW PREVENTION SHALL BE IN ACCORDANCE WITH R-18-4-115.
28. CONSTRUCTION MATERIALS USED IN WATER SYSTEM MUST BE LEAD FREE AS PER AAC R18-4-504 AND R18-1-101 (43).

ARIZONA WATER COMPANY CONSTRUCTION NOTES

1. CONNECT M.J. FITTINGS TO M.J. FITTINGS USING FOSTER ADAPTERS.
2. ALL MATERIALS & PIPE REMOVED UNLESS OTHERWISE INDICATED, MUST BE DISPOSED BY THE CONTRACTOR.
3. ASPHALT REPLACEMENT PER LOCAL PERMIT REQUIREMENTS.
4. ALL NEW RESTRAINED PIPE MUST BE U.S. PIPE TR FLEX, AMERICAN FLEX RING OR M.J. DUCTILE IRON PIPE WITH MEGALUG SERIES 1100, STAR GRIP SERIES 3000 OR TUF GRIP SERIES 1000 JOINT RESTRAINTS.
5. USE MEGALUG SERIES 1100, STAR GRIP SERIES 3000 OR TUF GRIP SERIES 1000 JOINT RESTRAINTS AT ALL M.J. FITTING CONNECTIONS.
6. INTERRUPTION OF WATER SERVICE FOR TIE-INS CANNOT EXCEED 4 HOURS IN DURATION FROM TIME OF SHUTDOWN TO COMPLETION OF FLUSHING.
7. COMPANY DOES NOT GUARANTEE EXISTING VALVES WILL PROVIDE A DRY SHUTDOWN.
8. ANY ADDITIONAL FITTINGS REQUIRED FOR TIE-INS BUT NOT SHOWN ON PLANS FOR PROPER ALIGNMENT SHALL BE CONSIDERED INCIDENTAL AND INCLUDED IN THE PIPE PRICE.
9. PROTECT ALL UTILITY CROSSINGS IN PLACE UNLESS OTHERWISE NOTED ON PLANS.
10. TRAFFIC CONTROL PER RIGHT-OF-WAY PERMIT REQUIREMENTS.
11. CONTRACTOR MUST USE NO. 1 METER BOXES WHEN INSTALLING A NEW SERVICE CONNECTION AT THE SAME LOCATION OF AN EX. SERVICE.
12. CONTRACTOR MUST MAINTAIN MIN. 3-FEET HORIZONTAL SEPARATION FROM OUTSIDE OF WATER MAIN TRENCH TO EX. POWER POLES AND PROVIDE BRACING FOR POWER POLES IF NECESSARY DURING CONSTRUCTION.
13. CONTRACTOR MUST PLUG ENDS OF ABANDONED IN PLACE WATER MAINS WITH CLASS 'C' CONCRETE MIN. 24-INCHES INTO PIPE.
14. PASSING COMPACTION TEST RESULTS ARE REQUIRED PRIOR TO PAVEMENT REPLACEMENT.
15. CONTRACTOR MUST PAY THE COST OF ALL WATER PROVIDED BY AWCo. TO THE CONTRACTOR FOR CONSTRUCTION AND TESTING OF THE WATER MAINS.
16. CONTRACTOR MUST PROVIDE AND INSTALL NEW CUSTOMER SHUTOFF VALVE AT EACH SERVICE WITH PRIOR CUSTOMER PERMISSION.
17. CONTRACTOR MUST COORDINATE MATERIAL, LOCATION, AND TIMING, OF SERVICE TIE-OVERS WITH CUSTOMER.
18. PROTECT WATER LINE TO BE ABANDONED IN PLACE UNTIL FINAL TIE-INS ARE COMPLETED.
19. CONTRACTOR HAS THE OPTION TO BORE THE ROAD WHILE MAINTAINING MINIMUM DEPTH FOR SERVICE REPLACEMENT.
20. CONTRACTOR MUST MAINTAIN ALL PAVEMENT CUTS IN A SMOOTH AND SAFE MANNER WITH FLUSH MOUNTED PLATES OR TEMPORARY ASPHALT UNTIL CONTRACTOR COMPLETES PERMANENT PAVEMENT REPLACEMENT.
21. CONTRACTOR MUST CONSTRUCT FACILITIES WITHIN RIGHT-OF-WAY WITH THE EXCEPTION OF SERVICE METER BOXES.

consor

REVISIONS

NO	DATE	BY	DESCRIPTION
A	10/3/25	FT	30% SUBMITTAL
B	12/12/25	FT	60% SUBMITTAL
C	03/03/26	FT	90% SUBMITTAL

The installation shown is to be installed in accordance with the Arizona Water Company standard specifications on file with the Arizona Department of Environmental Quality

Approved as to form this 9th day of March, 2026 by the Arizona Water Company Legal Department

W.A. No.:
P.E. No.:
SYSTEM:
LEGAL DESC.:
TAX DIST.:
SIB No.:
DATE: 03/03/2026
SCALE: AS SHOWN
DRAWN BY: JLC
REVIEWED BY: SDC
CHECKED BY: FHT

ARIZONA WATER COMPANY
3805 N. BLACK CANYON HWY. POST OFFICE BOX 29006
PHOENIX, ARIZONA 85038-9006
(602) 240-6860

PROJECT DESC: STANFIELD GWS&T USBR GRANT COORDINATION

PROJECT SHEET DESC: ENGINEER NOTES

DWG. No.: G-004

Drawing Path and Name: C:\Users\derek.cloud\DC\ACCDocs\Consor\Stanfield GWS&T USBR Grant Coordination\Project Files\1-Design\01-GEN\1-SHEETS\W242187AZ.00_G-004.dwg, Plotted Date: March 9, 2026 1:38 PM By: Derek Cloud

GENERAL NOTES

DEFINITIONS:

1. COMPANY. THE WORDS "COMPANY" OR "ARIZONA WATER COMPANY" MEAN ARIZONA WATER COMPANY, AND WHERE APPLICABLE, ANY DIVISION OF ARIZONA WATER COMPANY, WHOSE PRINCIPAL PLACE OF BUSINESS IS LOCATED AT 3805 NORTH BLACK CANYON HIGHWAY, PHOENIX, ARIZONA 85015-5351 (POST OFFICE BOX 29006, PHOENIX, ARIZONA 85038-9006).
2. COMPANY'S AUTHORIZED REPRESENTATIVE. THE WORDS "COMPANY'S AUTHORIZED REPRESENTATIVE" MEAN ANY OFFICER OF THE COMPANY, AND ANY OF THE COMPANY'S ENGINEERS, ANY DIVISION MANAGER OR SUPERINTENDENT OF THE COMPANY AND/OR SUCH OTHER PERSON(S) DESIGNATED IN WRITING AS THE "COMPANY'S AUTHORIZED REPRESENTATIVE" BY THE PRESIDENT OR ANY VICE PRESIDENT OF THE COMPANY.
3. CONTRACTOR. THE WORD "CONTRACTOR" MEANS EITHER AN INDIVIDUAL OR OTHER ENTITY EMPLOYED TO DO THE WORK AS SHOWN ON THE CONSTRUCTION DRAWINGS AND AS SPECIFIED HEREIN.
4. CONSTRUCTION DRAWINGS. THE WORDS "CONSTRUCTION DRAWINGS" MEAN PLANS PREPARED BY OR ON BEHALF OF ARIZONA WATER COMPANY.
5. CONTRACT. THE WORD "CONTRACT" MEANS THE WRITTEN DOCUMENT TITLED "PROPOSAL/CONTRACT" WHEN SUCH DOCUMENT HAS BEEN SIGNED BY AN OFFICER OR OTHER AUTHORIZED REPRESENTATIVE OF BOTH THE CONTRACTOR AND THE COMPANY.

GENERAL:

1. ALL WORK IS TO BE COMPLETED IN A SAFE, WORKMANLIKE MANNER AND IN ACCORDANCE WITH THESE CONSTRUCTION SPECIFICATIONS; ANY DEVIATION THEREFROM MUST BE APPROVED IN WRITING BY THE COMPANY.
2. INSTALLATIONS MUST CONFORM WITH THE REQUIREMENTS OF ALL GOVERNMENTAL REGULATING AGENCIES AND THE COST OF CONFORMING TO SUCH REGULATIONS MUST BE INCLUDED IN THE UNIT BID PRICES. EXAMPLES OF SUCH REGULATIONS, WITHOUT ATTEMPTING TO BE INCLUSIVE, ARE:
   - A. SPECIAL COMPACTION AND PAVING FOR STREET CROSSING.
   - B. SHORING WHEN REQUIRED BECAUSE OF THE TRENCH DEPTH.
   - C. CLOSING A TRENCH IN THOSE AREAS WHERE NO OPEN TRENCH IS ALLOWED OVERNIGHT.
   - D. BARRICADING AND TRAFFIC CONTROL AS REQUIRED.

LOCATION MARKING:

1. ALIGNMENT STAKES AS REQUIRED IN THE OPINION OF THE COMPANY SHALL BE FURNISHED BY THE COMPANY TO THE CONTRACTOR AND SHALL BE SET BY THE COMPANY AT AGREED UPON INTERVALS AND OFFSETS. UNDER NORMAL CIRCUMSTANCES THESE WILL REFERENCE THE PIPELINE LOCATION FIVE FEET (5') INTO THE RIGHT-OF-WAY MEASURED FROM PROPERTY PINS. GRADE STAKES WILL BE PROVIDED ONLY WHEN THE CONSTRUCTION DRAWINGS SHOW A PIPELINE DEPTH OTHER THAN COVERED IN THESE SPECIFICATIONS. IT IS THE RESPONSIBILITY OF THE CONTRACTOR TO PRESERVE ALL SURVEY WORK.

TRENCH EXCAVATION:

1. THE TRENCH LOCATION IS TO BE DETERMINED BY THE CONSTRUCTION DRAWINGS.
2. FOR 8-INCH OR SMALLER PIPE: THE DEPTH OF THE TRENCH PRIOR TO PIPE LAYING SHALL BE SUCH THAT THE FINISHED PIPELINE SHALL HAVE BETWEEN THIRTY-SIX INCHES (36") AND FORTY-TWO INCHES (42") OF COVER UNLESS OTHERWISE SPECIFIED ON THE CONSTRUCTION DRAWINGS.
3. FOR 12-INCH AND LARGER PIPE: THE DEPTH OF THE TRENCH PRIOR TO PIPE LAYING SHALL BE SUCH THAT THE FINISHED PIPELINE SHALL HAVE BETWEEN FORTY-EIGHT INCHES (48") AND SIXTY INCHES (60") OF COVER UNLESS OTHERWISE SPECIFIED ON THE CONSTRUCTION DRAWINGS.
4. THE WIDTH OF THE TRENCH AT AND BELOW THE LEVEL AT THE TOP OF THE PIPE SHALL BE A MINIMUM OF TWELVE INCHES (12") PLUS THE OUTSIDE DIAMETER OF THE PIPE BARREL AND A MAXIMUM OF TWENTY-FOUR INCHES (24") PLUS THE OUTSIDE DIAMETER OF THE PIPE BARREL.
5. THE BOTTOM OF THE TRENCH SHALL BE ACCURATELY GRADED TO PROVIDE A UNIFORM BEARING FOR EACH LENGTH OF PIPE FOR THE FULL LENGTH OF THE PIPE. IF THE NATIVE MATERIAL ON THE TRENCH BOTTOM CAN BE REASONABLY DUG BY HAND, BELL HOLES SHALL BE DUG FOR THE JOINTS SO THAT THE JOINTS IN NO WAY SUPPORT THE PIPE. WHEN NATIVE MATERIALS SUCH AS ROCK ARE ENCOUNTERED DURING TRENCHING THAT WILL NOT PROVIDE A UNIFORM SUPPORT FOR THE PIPE, THE TRENCH WILL BE OVER-EXCAVATED AN ADDITIONAL SIX INCHES (6") AND SUITABLE BEDDING MATERIAL WILL BE PLACED IN THE TRENCH.
6. BEDDING MATERIAL WILL BE PLACED BY HAND IN FOUR-INCH (4") LIFTS AND COMPACTED TO ENSURE UNIFORM COMPACTION AND TO ELIMINATE ANY VOIDS UNDER THE PIPE. WHEN THE SPACE BETWEEN THE PIPE AND TRENCH BOTTOM VARIES, THIS MUST BE BACKFILLED AND COMPACTED IN FOUR-INCH (4") LIFTS TO THE MID-SECTION OF THE PIPE.
7. WHENEVER THE TRENCH IS OVER-EXCAVATED FOR WHATEVER REASON, THE TRENCH BOTTOM WILL BE BROUGHT UP TO THE CORRECT DEPTH AT THE CONTRACTOR'S EXPENSE USING EITHER METHOD (A) OR (B) AS FOLLOWS:
   - A. A.B.C. MATERIAL SHALL BE USED AND COMPACTED TO A UNIFORM DENSITY OF NOT LESS THAN 80% OF THE MAXIMUM DENSITY AS DETERMINED BY AASHTO T-99 METHOD A AND T-191.
   - B. NATIVE MATERIAL 100% OF WHICH WILL PASS THROUGH A ONE AND ONE-HALF INCH (1-1/2") SCREEN AND AT LEAST 20% OF WHICH WILL PASS THROUGH A NUMBER-8 SCREEN SHALL BE USED AND COMPACTED TO A UNIFORM DENSITY OF NOT LESS THAN 85% OF THE MAXIMUM DENSITY AS DETERMINED BY AASHTO T-99 METHOD A AND T-191.

MATERIALS TO BE PROVIDED BY THE CONTRACTOR:

UNLESS OTHERWISE SPECIFIED ON THE CONSTRUCTION DRAWINGS OR IN THE CONTRACT, THE CONTRACTOR WILL SUPPLY ALL OF THE NECESSARY MATERIALS WHICH WILL BECOME A PERMANENT AND INTEGRAL PART OF THE WATER DISTRIBUTION SYSTEM, INCLUDING CONCRETE BLOCKING, ANCHORS, BACKFILL MATERIAL, PAVING MATERIAL AND SUPPLIES USED DURING THE PROSECUTION OF THE WORK. ALL MATERIALS PROVIDED BY THE CONTRACTOR TO CONSTRUCT THE WATER DISTRIBUTION SYSTEM MUST BE NSF STANDARD 61 APPROVED. ALL POTABLE WATER PIPES AND FITTINGS SHALL HAVE NSF-PW SEAL. CONSTRUCTION MATERIALS USED IN THE WATER SYSTEM SHALL BE LEAD FREE AS DEFINED AT AAC R28-4-504 AND R18-1-101. THE CONTRACTOR WILL PROVIDE THE FOLLOWING MATERIALS:

1. FIRE HYDRANTS: MUELLER SUPER CENTURION 250 FIRE HYDRANT, MEETS ANSI/AWWA C502 STANDARD, MODEL NO. A-423, 5-1/4" MAIN VALVE OPENING, THREE WAY, 6" MECHANICAL JOINT SHOE, 1-1/2" PENTAGON OPERATING NUT, COLOR - YELLOW, DRAIN OPEN, OPEN DIRECTION - LEFT, 4' OR 4'-6" BURY DEPENDING ON APPLICATION. FOR PUMPER AND HOSE NOZZLE INFORMATION SEE BELOW.
   - A. ONE - 4" PUMPER NOZZLE, NST AND TWO - 2-1/2" HOSE NOZZLES, NST. (THESE LOCATIONS ONLY: AJO, CASA GRANDE, COOLIDGE AND SAN MANUEL.)
   - B. ONE - 4-1/2" PUMPER NOZZLE, NST AND TWO - 2-1/2" HOSE NOZZLES, NST. (THESE LOCATIONS ONLY: APACHE JUNCTION, ARIZONA CITY, LAKESIDE, ORACLE, OVERGAARD, PINEWOOD, RIMROCK, SEDONA, SIERRA VISTA, WHITE TANK AND WINKELMAN.)
   - C. ONE - 4-1/2" PUMPER NOZZLE, NST AND TWO - 2-1/2" HOSE NOZZLES, NPT (BISBEE ONLY.)
   - D. ONE - 3" PUMPER NOZZLE GA 6-350 (6 THREADS PER INCH, 3.50 PITCH DIAMETER) AND TWO - 2-1/2" HOSE NOZZLES, NPT (MIAMI ONLY.)
   - E. ONE - 3-1/2" PUMPER NOZZLE GA 6-411 (6 THREADS PER INCH, 4.11 PITCH DIAMETER) AND TWO - 2-1/2" HOSE NOZZLE, NST (SUPERIOR ONLY.)
2. FITTINGS: MANUFACTURED BY TYLER OR UNION. CROSSES, ELBOWS, TEES, CAP, REDUCER, ADAPTER, PLUG, BLIND FLANGE AND TAPPED FLANGE; DUCTILE IRON, CLASS 350, SSB, CAST IRON CEMENT LINED.
3. FOSTER ADAPTORS FOR MJ, MADE BY INFACT CORPORATION: AVAILABLE IN SIZE 4" TO 16". PART NO. 4" = 4FA-BC, 6" = 6FA-BC, 8" = 8FA-BC, 10" = 10FA-BC, 12" = 12FA-BC, 16" = 16FA-BC.
4. DETECTOR CHECK VALVE: MUELLER/ HERSEY EDC III, IRON BODY, INCLUDING 5/8" X 3/4" TRIM KIT. TRIM KIT PART NO.: 4" = 282080, 6" = 282082, 8" = 282085, 10" = 282496.
5. GATE VALVES: MUELLER RESILIENT WEDGE GATE VALVES, MEETS AWWA C509 SPECIFICATION, 250 PSIG, NON-RISING STEM, PART NO. A-2360 SIZES 4" THROUGH 12" ; PART NO. A-2361 SIZES 14" THROUGH 36", LOW ZINC STEMS, EPOXY COATED INSIDE AND OUTSIDE TO MEET THE NSF 61 RATING. THE BONNET AND STUFFING BOX SHALL HAVE 304 STAINLESS STEEL BOLTS/NUTS.
6. TRACER WIRE AND WARNING TAPE: (1) TRACER WIRE: SHALL BE DIRECT BURY AWG #14 SOLID COPPER WIRE, COLOR: BLUE. (2) WARNING TAPE: REEF INDUSTRIES, STANDARD TERRA TAPE IN 3" WIDTHS. COLOR: BLUE AND IMPRINTED 'ARIZONA WATER COMPANY'.
7. AIR RELEASE VALVE: CRISPIN MODEL AR10 WITH 1" NPT INLET AND 1/2" NPT OUTLET, CAST IRON BODY AND TOP FLANGE; WITH A 5/64" ORIFICE WITH STAINLESS STEEL VALVE SEALING FACES AND BUNA-N RUBBER.
8. PRESSURE RELIEF VALVE: WATTS 174A, MODEL M, 2" INLET, 2" OUTLET, BRONZE BODY, 30LB. TO 150LB. PRESSURE RANGE.
9. MEGALUG: MECHANICAL JOINT RESTRAINT MADE OF DUCTILE IRON CONFORMING TO ASTM 536-80, 250 PSI MADE BY EBAA IRON, INC., SERIES 1100 OR EQUAL.
10. METER BOXES: (1) CONCRETE BOX WITH A STEEL REGULAR LID, NUMBER 1: TUCSON SPECIFICATION. (2) CONCRETE BOX WITH A STEEL REGULAR LID, NUMBER 2, 3, AND 4: PHOENIX SPECIFICATION.
11. PIPE, COPPER: TYPE K SOFT COPPER IN 60 OR 100-FOOT COILS, PER ASTM B88.
12. PIPE, DUCTILE IRON: DUCTILE IRON PIPE, CEMENT LINED, PUSH-ON, CONFORM TO CURRENT ANSI/AWWA SPECIFICATION A21.51/C151, PRESSURE CLASS 350 (SIZES 4" THROUGH 12"), PRESSURE CLASS 250 (SIZES 14" THROUGH 20"), OR PRESSURE CLASS 200 FOR 24" THROUGH 36" PIPE. VENDORS: (1) PACIFIC STATES CAST IRON PIPE COMPANY (2) GRIFFIN PIPE (3) UNITED STATES PIPE AND FOUNDRY COMPANY (4) AMERICAN DUCTILE IRON PIPE (5) CLOW PIPE (MCWANE, INC.)
13. PIPE, PLASTIC: PLASTIC PIPE, C-900 PVC PER ANSI/AWWA C900, CLASS 150, SIZES 6" THROUGH 12". NSF61 APPROVED. FURNISHED IN LAYING LENGTHS OF 20'. THE BARREL SHALL CONFORM TO THE OUTSIDE DIMENSIONS OF STEEL PIPE (IPS) OR CAST IRON (CI) PIPE EQUIVALENT AND THE WALL THICKNESS OF DIMENSION-RATIO (DR) 18.
14. POLYETHYLENE ENCASEMENT (POLYWRAP): FOR ALL PIPELINE AND RELATED FITTINGS INSTALLED, EXCEPT FOR THE COOLIDGE DIVISION. MINIMUM 8 MIL. AND INSTALLED PER AWWA C105/A21.5-93 AND ASTM A-674-89. MANUFACTURED BY THE PACIFIC STATES CAST IRON PIPE COMPANY. THE WRAPPING TAPE SHALL BE MINIMUM 10 MIL. VINYL TAPE. NO DUCT TAPE SHALL BE USED.
15. COUPLING: MUELLER, STRAIGHT THREE PART UNION, TESTED TO MEET ANSI/AWWA C800, H15403, CONDUCTIVE COMPRESSION. MUELLER, H15428, STRAIGHT COUPLING, CONDUCTIVE COMPRESSION BY MALE IRON PIPE.TESTED TO MEET ANSI/AWWA C800 SPECIFICATION. SIZE: 2". MUELLER, H15451, STRAIGHT COUPLING, CONDUCTIVE COMPRESSION BY FEMALE IRON PIPE, TESTED TO MEET ANSI/AWWA C800 SPECIFICATION. SIZE: 2". VIKING JOHNSON BRAND, SOLD BY MUELLER: MAXIFIT STRAIGHT (2"-24"), MAXIFITXTRA STRAIGHT (4"-8") OR MAXISTEP TRANSITION, TESTED TO MEET AWWA/ANSI C.219-91 SPECIFICATIONS - CERTIFIED TO ISO 9001:1994 / SMITH - BLAIR QUANTUM.
16. STOP, ANGLE METER, BALL: MUELLER, VALVE, B24258, CONDUCTIVE COMPRESSION BY METER SWIVEL NUT, TESTED TO MEET ANSI/AWWA C800, SIZE 5/8 " X 3/4" X 3/4" FOR A 3/4" SERVICE OR SIZE 1" FOR A 1" SERVICE. MUELLER, VALVE, B24265, FEMALE PIPE THREAD BY METER SWIVEL NUT, TESTED TO MEET ANSI/AWWA C800, SIZE 5/8" X 3/4 " X 3/4 " FOR A 3/4" SERVICE OR SIZE 1" FOR A 1" SERVICE.
17. STOP, CORP: MUELLER, BALL VALVE, B25008, TAPER THREAD BY CONDUCTIVE COMPRESSION, TESTED TO MEET ANSI/AWWA C800 SPECIFICATION, SIZES: 3/4", 1" AND 2". MUELLER, BALL VALVE, B25028, IRON PIPE THREAD BY CONDUCTIVE COMPRESSION, TESTED TO MEET ANSI/AWWA C800 SPECIFICATION. SIZES 3/4", 1", AND 2". MUELLER, 300 BALL CURB VALVE, B-25122, TAPER THREAD BY CONDUCTIVE COMPRESSION, TESTED TO MEET ANSI/AWWA C800 SPECIFICATIONS, SIZE: 2". (2" SERVICE)
18. STOP, CURB: ORISEAL VALVE, H10291, IRON PIPE THREAD BY IRON PIPE THREAD, QUARTER TURN CHECK, BRASS, TESTED TO 300 PSI WORKING PRESSURE, TESTED TO MEET ANSI/AWWA C800 SPECIFICATION, SIZE: 2". MUELLER, B20283, MUELLER 300 BALL CURB VALVE, FEMALE IRON PIPE BY FEMALE IRON PIPE, QUARTER TURN CHECK, TESTED TO MEET ANSI/AWWA C800 SPECIFICATION. SIZE: 2". (BLOW-OFF E-9-8-1).
19. TAPPING SADDLE: SMITH BLAIR, CAST BRONZE ASTM-B584 85-5-5-5, DOUBLE STRAP, IRON PIPE THREADS, MODELS 321 AND 323. WASHERS ARE SILICON BRONZE, ASTM-B36. GASKETS ARE GRADE 60 BUNA N, OR MUELLER BRONZE DOUBLE STRAP SERVICE SADDLE, BR 2 B SERIES, CAST BRONZE, ASTM-B585, 85-5-5-5, OR H16084, 200 PSIG, MEETS ANSI/AWWA C800.
20. TAPPING SLEEVE: MUELLER H304 STAINLESS STEEL TAPPING SLEEVE, JCM 432 18 8 TYPE 304 STAINLESS STEEL TAPPING SLEEVE, ROMAC "SST" TYPE 304 STAINLESS STEEL TAPPING SLEEVE OR CASCADE-STYLE CST-EX STAINLESS STEEL PRESSURE-RATED TAPPING SLEEVE.
21. TAPPING VALVE: MUELLER RESILIENT WEDGE TAPPING VALVE, CATALOG NUMBER T-2360-16, CLASS 125, SIZES 4" THROUGH 12"; T-2361-16, CLASS 125, SIZES 14" TO 36" ALL WITH TYPE 304 STAINLESS STEEL FASTENERS; BYPASS VALVES ARE REQUIRED ON 18" - 36" VALVES FLANGE BY MECHANICAL JOINT PER ANSI/AWWA C111, IRON WEDGE, NON-RISING STEM. EPOXY COATED INTERIOR/EXTERIOR PER ANSI/AWWA C550 FOR NSF 61 COMPLIANCE. 250 PSI RANGE FOR VALVES 4" TO 12". 150 PSI RANGE FOR VALVES 14" TO 36".
22. U-BRANCH: MUELLER, H15364, 1" MALE IRON PIPE BY 3/4" MALE IRON PIPE, TESTED TO MEET ANSI/AWWA C800 SPECIFICATION. SIZE: 1" X 3/4" X 13-1/2", STRAIGHT LINE.
23. VALVE BOXES: VALVE BOX WITH COVER, ADJUSTABLE, TYLER 562-A OR EQUAL, MADE OF CAST IRON.
24. VAULTS: UTILITY VAULT COMPANY, CHANDLER, AZ. (1) 4484-WA CONCRETE VAULT WITH A 3660 ALUMINUM DOUBLE TORSION DOOR WITH A RECESSED PADLOCK HASP, TWO - 18" X 24" CENTER KNOCKOUTS. (2) 575-WA CONCRETE VAULT WITH A 4874 ALUMINUM DOUBLE TORSION DOOR WITH A RECESSED PADLOCK HASP, TWO - 18" X 24" CENTER KNOCK OUTS AND ADJUSTABLE FRAME. (3) 612-SX-WA CONCRETE VAULT WITH A 4874 ALUMINUM DOUBLE TORSION DOOR WITH A RECESSED PADLOCK HASP, TWO - 18" X 24" CENTER KNOCKOUTS.
25. VALVE, METER: MUELLER, B24265-1, MUELLER 300 BALL ANGLE METER VALVE, FEMALE IRON PIPE BY METER NUT, QUARTER TURN CHECK, LOCK WING, TESTED TO MEET ANSI/AWWA C800 SPECIFICATION. SIZE: 1". MUELLER, B25170, MUELLER 300 BALL STRAIGHT VALVE, CONDUCTIVE COMPRESSION BY FEMALE IRON PIPE, QUARTER TURN CHECK, LOCK WING, TESTED TO MEET ANSI/AWWA C800 SPECIFICATION. SIZE: 1".
26. YOKES, METER: RELOCATOR TYPE COPPER METER YOKE WITH HORIZONTAL INLET AND OUTLET AND METER THREAD ENDS, B24118, WITH LOCK WING MUELLER 300 ANGLE BALL VALVE, FULL PORT, SIZES: 1" X 12", 5/8" X 3/4" X 7", 5/8 X 3/4" X 9".
27. MUELLER, 2" COPPER METER YOKE WITH HORIZONTAL INLET AND OUTLET AND FEMALE IRON PIPE THREADS, B2423-99000, WITH LOCK WING MUELLER 300 BALL ANGLE METER VALVES ON INLET AND OUTLET RISERS. RAISED 1" BY-PASS WITH LOCK WING MUELLER 300 BALL VALVE.
28. THE CONTRACTOR ALSO WILL BE REQUIRED TO PROVIDE THE FOLLOWING MATERIALS, THE COST OF WHICH WILL BE INCLUDED IN ITS UNIT BID PRICE: ALL MATERIAL AND CONCRETE FOR THRUST BLOCKS, OTHER ANCHORS, REINFORCING STEEL; ALL GRAVEL, CRUSHED STONE, A.B.C., EARTH, SAND, OR SCREENED MATERIAL WHICH MAY BE REQUIRED;
29. ALL MATERIAL FOR BRACING AND SHORING TRENCHES AND FOR CONSTRUCTION OF FORMS; ALL BARRICADES AND TRAFFIC CONTROL EQUIPMENT; ALL MATERIAL FOR PAVING REPLACEMENT AND ANY WATER USED FOR COMPACTION OF BACKFILL.

INSTALLATION OF MATERIALS:

1. ALL MATERIALS ARE TO BE INSTALLED IN ACCORDANCE WITH MANUFACTURERS RECOMMENDATIONS UNLESS OTHERWISE DIRECTED BY THESE SPECIFICATIONS.
2. ALL PIPE, FITTINGS AND VALVES SHALL BE LAID TRUE TO THE LINES, GRADES AND LOCATIONS ESTABLISHED BY THE SPECIFICATIONS AND THE CONSTRUCTION DRAWINGS.
3. THE ENDS AND INSIDE OF THE PIPE SHALL BE THOROUGHLY CLEANED AND INSPECTED FOR DAMAGE. NO DAMAGED MATERIALS SHALL BE INSTALLED IN THE WATER DISTRIBUTION SYSTEM. WHENEVER THE WORK CEASES FOR ANY REASON, ALL OPEN PIPELINE ENDS SHALL BE TIGHTLY PLUGGED BY THE CONTRACTOR. PLUGS SHALL BE WATERTIGHT AND APPROVED BY THE COMPANY.
4. CONCRETE THRUST BLOCKS OF THE SIZES REQUIRED BY THE PLANS AND SPECIFICATIONS ARE TO BE PROVIDED AT ALL VALVES, CHANGES IN DIRECTION OR SIZE, OR AT ANY OTHER POINT WHERE AN UNBALANCED THRUST DUE TO WATER PRESSURE WOULD EXIST. THRUST BLOCKS ARE TO BE FORMED TO PREVENT ANY CONCRETE FROM SPILLING OVER OR INTO A JOINT.
5. TRENCH CURVES AS SHOWN ON THE CONSTRUCTION DRAWINGS MAY BE MADE WITHOUT FITTINGS WHEN USING PUSH ON JOINT PIPE UP TO TWELVE INCHES (12") IN DIAMETER, IF THE DEFLECTION OF THE PIPE DOES NOT EXCEED FIVE DEGREES (5°) OR NINETEEN INCHES (19") PER EIGHTEEN-FOOT (18') LENGTH OF PIPE. THE MINIMUM RADIUS OF SUCH CURVES WILL BE TWO HUNDRED FIVE FEET (205').
6. PRIOR TO CONSTRUCTION, THE APPROPRIATE AGENCY(IES) WILL BE NOTIFIED AS REQUIRED BY THE PERMIT(S).
7. IT SHALL BE THE CONTRACTOR'S RESPONSIBILITY TO UNCOVER ALL EXISTING WATER LINES BEING CONNECTED TO, AND TO VERIFY THE LOCATION, DEPTH AND SIZE OF PIPE BEFORE ANY CONSTRUCTION BEGINS.
8. ANY CONSTRUCTION PERFORMED WITHOUT THE KNOWLEDGE OF THE DULY AUTHORIZED REPRESENTATIVE IS LIABLE FOR REMOVAL AND REPLACEMENT AT THE CONTRACTOR'S EXPENSE.
9. ALL FIRE HYDRANTS, FRAMES, COVERS AND VALVE BOXES, ETC. SHALL BE ADJUSTED TO FINISHED GRADE PRIOR TO THE PLACING OF THE ASPHALT CONCRETE SURFACE COURSE BY THE CONTRACTOR (WHERE APPLICABLE).
10. AIR RELEASE VALVES SHALL BE INSTALLED AT WATER SYSTEM HIGH POINTS PER STANDARD DETAIL E-9-8-2/E-9-8-3.
11. ALL WATER SERVICES SHALL BE SET A MINIMUM OF TWO FEET (2') ON THE CUSTOMER'S PROPERTY, PREFERABLY WITHIN THE P.U.E. AND NOT WITHIN RIGHT-OF-WAY.
12. UNLESS OTHERWISE SPECIFIED ON THE CONSTRUCTION DRAWINGS, ALL WATER MAINS SHALL BE INSTALLED FIVE FEET (5') FROM THE PROPERTY LINE INSIDE THE RIGHT-OF-WAY OR EASEMENT.
13. WATER VALVES SHALL BE SPACED NOT MORE THAN FIVE HUNDRED FEET (500') IN COMMERCIAL DISTRICTS AND NOT MORE THAN EIGHT HUNDRED FEET (800') IN OTHER DISTRICTS. VARIATIONS MAY BE REQUIRED FOR TRANSMISSION MAINS OR SPECIAL APPLICATIONS. INSTALLATION OF WATER LINE CASING SHALL BE PER STANDARD SPECIFICATION E-9-24-1.
14. TRACER WIRE AND WARNING TAPE ARE TO BE INSTALLED ON ALL MAINS, TEES, CROSSES, ELLS AND FIRE HYDRANT LATERALS. THEY WILL NOT BE INSTALLED ON SERVICE LINES. THE TRACER WIRE WILL BE INSTALLED ON THE WATER MAIN 45 DEGREES FROM THE VERTICAL CENTERLINE OF THE PIPE AND SHALL BE TAPED TO THE FITTINGS DIRECTLY AND ON THE MAIN EVERY 10 FEET USING A MINIMUM 10 MIL VINYL TAPE. THE TRACER WIRE SHALL BE PLACED BETWEEN THE VALVE RISER AND BOX WITH A MINIMUM OF 12" OF WIRE INSIDE. THE WARNING TAPE SHALL BE INSTALLED A MINIMUM OF TWO FEET BELOW THE SURFACE, BEING MEASURED FROM FINAL GRADE, DIRECTLY OVER THE CENTER OF THE PIPE. ANY SPLICES IN THE TRACER WIRE SHALL BE JOINED USING WATERPROOF CONNECTORS. ANY SPLICES IN THE WARNING TAPE SHALL BE JOINED USING MINIMUM 10 MIL VINYL TAPE. THE TRACER WIRE SHALL BE TESTED FOR CONTINUITY AFTER BACKFILL AND COMPACTION, BUT BEFORE PAVING. ANY DETECTED DAMAGES TO THE WIRE SHALL BE REPAIRED BEFORE PAVING WILL BE ALLOWED.

BACKFILL OF WATER MAIN TRENCHES:

1. BACKFILL OF ANY EXCAVATION SHALL CONFORM TO THE REQUIREMENTS OF ANY OF THE GOVERNMENTAL AGENCIES HAVING JURISDICTION OVER THE LOCATION. IF NO GOVERNMENTAL AGENCY HAVING SUCH JURISDICTION SPECIFIES BACKFILL OR COMPACTION REQUIREMENTS, AND NO SPECIAL REQUIREMENTS ARE SHOWN ON THE CONSTRUCTION DRAWINGS, THE PROCEDURE SET FORTH IN THIS SECTION WILL APPLY FOR WATER LINE TRENCHES.
2. THE BEDDING MATERIAL ABOVE THE PIPE AND BACKFILL MATERIAL SHALL BE COMPACTED TO A MINIMUM OF 70% COMPACTION WITHIN A UTILITY EASEMENT AND 80% COMPACTION WITHIN A RIGHT-OF-WAY AS DETERMINED BY AASHTO T-99 METHOD A AND T-191. IF WATER SETTLING IS USED FOR COMPACTION, IT IS THE RESPONSIBILITY OF THE CONTRACTOR TO PREVENT THE PIPE FROM FLOATING.
3. THE BEDDING MATERIAL SHALL BE EITHER NATIVE MATERIAL, 100% OF WHICH WILL PASS THROUGH A ONE AND ONE-HALF INCH (1-1/2") SCREEN AND AT LEAST 20% OF WHICH WILL PASS THROUGH A NUMBER-8 SCREEN, OR IMPORTED MATERIAL WHICH CONFORMS TO M.A.G. SPECIFICATIONS FOR A.B.C. OR TYPE-B SELECT MATERIALS. BEDDING MATERIAL SHALL BE USED BELOW AND AROUND THE PIPE AND A MINIMUM OF TWELVE INCHES (12") ABOVE THE PIPE. SHADE AND BEDDING MATERIAL TO BE MECHANICALLY COMPACTED PRIOR TO REMAINDER OF TRENCH BACK-FILL.
4. THE REMAINDER OF THE TRENCH SHALL BE BACKFILLED WITH NATIVE OR IMPORTED MATERIAL WHICH SHALL BE OF SOUND EARTHEN MATERIAL FREE FROM BROKEN CONCRETE, WOOD, BROKEN PAVEMENT, OR OTHER UNSUITABLE SUBSTANCES. EXCEPT AS OTHERWISE SPECIFIED, BACKFILL MAY BE MATERIAL CONTAINING NO PIECES LARGER THAN SIX INCHES (6") IN GREATEST DIMENSION.
5. WHERE SETTLEMENT OCCURS, ADDITIONAL BACKFILL MATERIAL SHALL BE PLACED AND COMPACTED AND THE TRENCH SHALL BE BROUGHT TO FINAL GRADE.

HYDROSTATIC TESTING OF COMPLETED PIPELINES:

1. HYDROSTATIC TESTING OF WATER PIPELINES WILL BE COMPLETED BEFORE THE NEW SYSTEM IS CONNECTED INTO THE EXISTING WATER SYSTEM SO THAT ALL TESTING CAN BE DONE AGAINST ALL NEW MATERIALS.
2. THE COMPLETED SECTION OF WATER PIPELINE TO BE TESTED SHALL BE SLOWLY FILLED WITH WATER WITH CARE BEING TAKEN TO EXPEL ALL AIR FROM THE PIPE. IF NECESSARY, THE PIPE WILL BE TAPPED AT HIGH POINTS TO VENT AIR.
3. THE CONTRACTOR SHALL PROVIDE ALL EQUIPMENT AND LABOR NECESSARY TO ACCOMPLISH THIS TESTING AND THE PRICE SHALL BE INCLUDED IN THE UNIT PRICES. THE CONTRACTOR SHALL NOTIFY THE COMPANY IN ADVANCE OF THE TESTING SO THAT THE COMPANY CAN SCHEDULE A DULY AUTHORIZED REPRESENTATIVE TO BE AT THE SITE DURING TESTING. THE CONTRACTOR, AT ITS OWN EXPENSE, SHALL MAKE ANY NECESSARY REPAIRS TO THE SYSTEM BEING TESTED IN ORDER TO CAUSE THE SECTION BEING TESTED TO MEET THE TEST LIMITS SET BELOW. THE CONTRACTOR MAY REQUEST AUTHORIZATION OF THE COMPANY TO CONNECT THE NEW PIPELINES TO THE EXISTING SYSTEM PRIOR TO COMPLETION OF PRESSURE TESTING WHEN, IN THE COMPANY'S SOLE OPINION AND JUDGMENT, CONDITIONS WARRANT SUCH CONNECTION.
4. THE CONTRACTOR SHALL ASSUME ALL RESPONSIBILITY TO COMPLETE PRESSURE TESTING TO COMPANY'S SPECIFICATIONS AFTER SUCH CONNECTION, INCLUDING, BUT NOT LIMITED TO, ISOLATION OF THE NEW PIPELINES FROM THE EXISTING SYSTEM, IF NECESSARY.
5. CONNECTIONS PRIOR TO COMPLETION OF PRESSURE TESTING SHALL NOT BE MADE UNLESS PRIOR COMPANY AUTHORIZATION HAS BEEN OBTAINED, AND ANY EXTRA EXPENSES RESULTING FROM SUCH CONNECTIONS SHALL BE THE SOLE RESPONSIBILITY OF THE CONTRACTOR.
6. LEAKAGE TESTS WILL BE FOR A PERIOD OF TWO HOURS AT 200 + OR - 5 PSI AT THE POINT OF LOWEST ELEVATION; LEAKAGE MAY NOT EXCEED 0.1 GALLONS PER HOUR PER ONE THOUSAND FEET (1,000') OF PIPE PER INCH OF DIAMETER. IF DRY UTILITIES ARE NOT INSTALLED, A SECOND PRESSURE TEST IS REQUIRED.

DISINFECTION AND FLUSHING OF COMPLETED WATER PIPELINES:

DISINFECTION AND FLUSHING WILL CONFORM TO RECOMMENDATIONS OF ARIZONA STATE DEPARTMENT OF HEALTH SERVICES ENGINEERING BULLETIN NUMBER 8, LATEST EDITION, OR ANY FUTURE ARIZONA DEPARTMENT OF ENVIRONMENTAL QUALITY BULLETINS. CONTRACTOR TO FOLLOW ALL CONDITIONS OF ANY DISCHARGE PERMIT.

NO OTHER UTILITIES ALLOWED IN OR NEAR WATER PIPELINE TRENCHES:

NO OTHER UTILITY INSTALLATIONS WILL BE PERMITTED IN THE WATER PIPELINE TRENCH OR WITHIN FIVE FEET (5') OF THE COMPANY'S WATER PIPELINE WHEN RUNNING PARALLEL TO THE WATER PIPELINES.

PROTECTION OF WATER MAIN NEAR SEWERS:

IN ORDER TO PROTECT WATER MAINS FROM CONTAMINATION BY SEWERS, THE INSTALLATION OF THE WATER MAINS MUST CONFORM TO THE FOLLOWING REQUIREMENTS:

1. HORIZONTAL - WHEN WATER LINES AND SEWERS ARE LAID PARALLEL WITH EACH OTHER, THE HORIZONTAL DISTANCE BETWEEN THEM SHALL NOT BE LESS THAN SIX FEET (6'). EACH LINE SHALL BE LAID ON UNDISTURBED OR BEDDED MATERIAL IN A SEPARATE TRENCH. WHERE CONDITIONS PREVENT THE MINIMUM HORIZONTAL SEPARATION SET FORTH ABOVE, EXTRA PROTECTION WILL BE REQUIRED. EXTRA PROTECTION SHALL CONSIST OF CONSTRUCTING THE SEWER MAIN WITH MECHANICAL JOINT DUCTILE IRON PIPE OR WITH SLIP-JOINT DUCTILE IRON PIPE IF JOINT RESTRAINT IS PROVIDED, OR ENCASING BOTH WATER AND SEWER MAIN IN CONCRETE. SEE AWC STANDARD DETAIL E-9-30-1 AND E-9-30-2.
   - A. THE CONSTRUCTION DRAWINGS SHALL INDICATE THE INSTALLATION REQUIREMENTS. THE DRAWINGS SHOWING THESE EXCEPTIONS SHALL HAVE BEEN APPROVED BY THE APPROPRIATE STATE AND/OR COUNTY HEALTH DEPARTMENT. REFER TO THE DIAGRAM BELOW FOR CLARIFICATION.

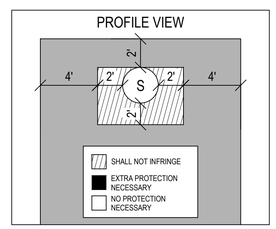

   - B. UNDER NO CIRCUMSTANCES WILL THE HORIZONTAL SEPAR

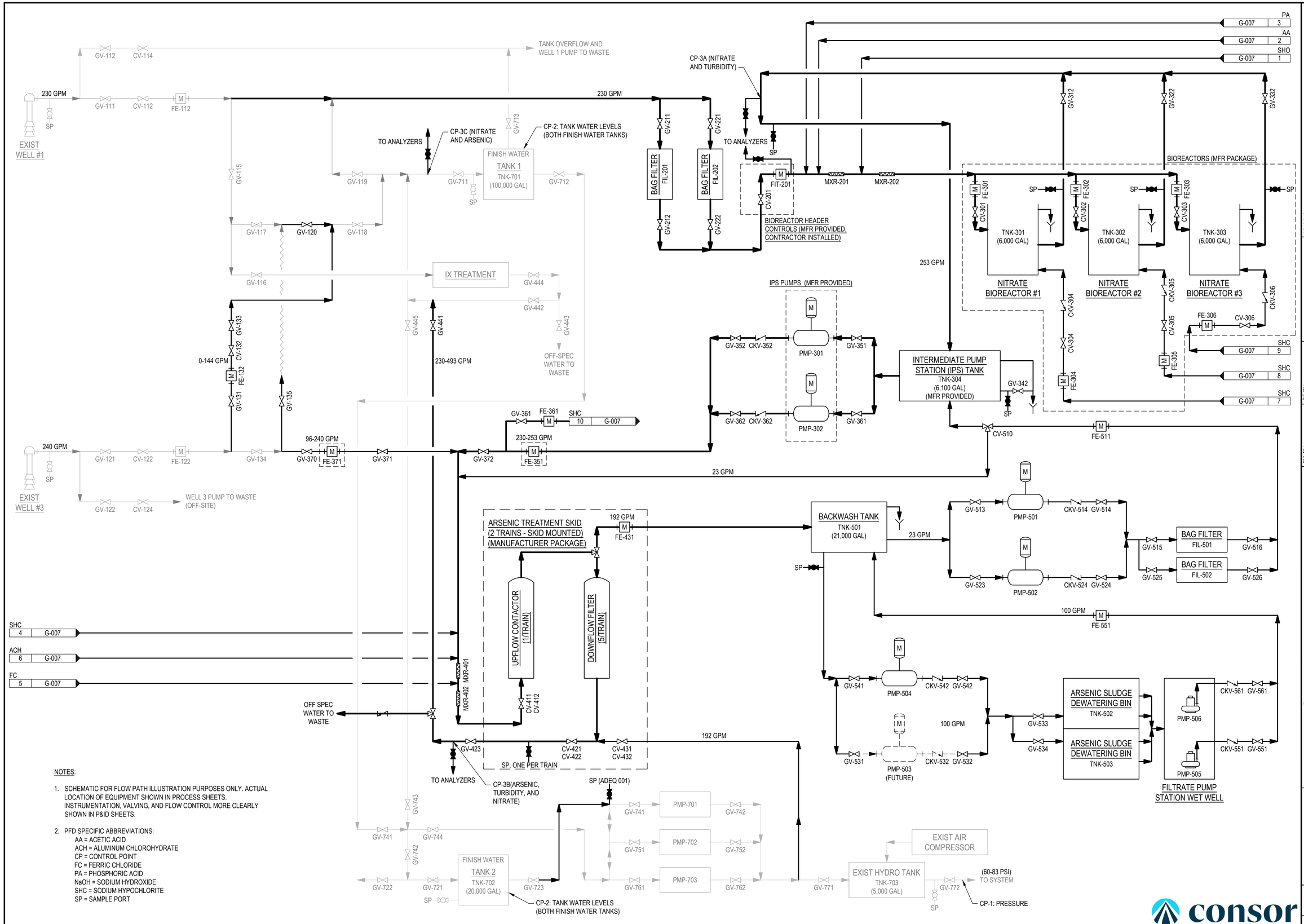

NOTES:

1. SCHEMATIC FOR FLOW PATH ILLUSTRATION PURPOSES ONLY. ACTUAL LOCATION OF EQUIPMENT SHOWN IN PROCESS SHEETS. INSTRUMENTATION, VALVING, AND FLOW CONTROL MORE CLEARLY SHOWN IN P&ID SHEETS.

2. PFD SPECIFIC ABBREVIATIONS:
   - AA = ACETIC ACID
   - ACH = ALUMINUM CHLOROHYDRATE
   - CP = CONTROL POINT
   - FC = FERRIC CHLORIDE
   - PA = PHOSPHORIC ACID
   - NaOH = SODIUM HYDROXIDE
   - SHC = SODIUM HYPOCHLORITE
   - SP = SAMPLE PORT

REVISIONS

NO	DATE	BY	DESCRIPTION
A	10/3/25	FT	30% SUBMITTAL
B	12/1/25	FT	60% SUBMITTAL
C	03/03/26	FT	90% SUBMITTAL

The installation shown is to be installed in accordance with the Arizona Water Company standard specifications on file with the Arizona Department of Environmental Quality

P.E. No:

W.A. No:

SYSTEM:

LEGAL DESC:

TAX DIST.:

SIB No:

DATE: 03/03/2026

SCALE: AS SHOWN

DRAWN BY: JLC

REVIEWED BY: SDC

CHECKED BY: FHT

ARIZONA WATER COMPANY
3805 N. BLACK CANYON HWY. POST OFFICE BOX 29006
PHOENIX, ARIZONA 85038-9006
(602) 240-6860

PROJECT DESC: STANFIELD GWS&T USBR GRANT COORDINATION

PROJECT SHEET DESC: PROCESS FLOW DIAGRAM 1

DWG. No.: G-006

SHEET 6 OF 80

Drawing Path and Name: C:\Users\derek.cloud\DC\ACCDocs\Consor\Stanfield GWS&T USBR Grant Coordination\Project Files\1-Design\01-GEN\1-SHEETS\W242167AZ.00_G-006_007.dwg, Plotted Date: March 9, 2026 1:42 PM By: Derek Cloud

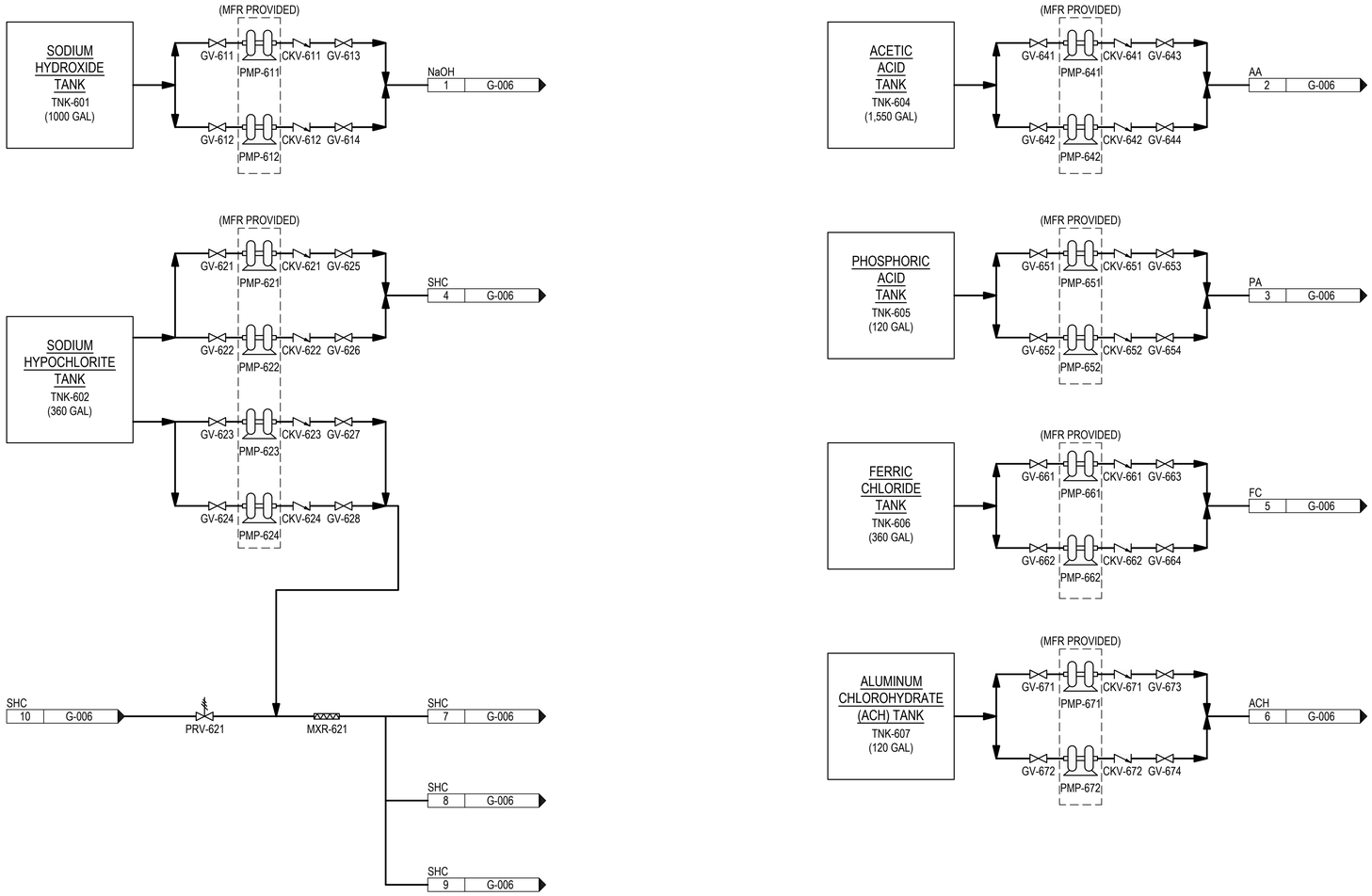

NOTES:

1. SCHEMATIC FOR FLOW PATH ILLUSTRATION PURPOSES ONLY. ACTUAL LOCATION OF EQUIPMENT SHOWN IN PROCESS SHEETS. INSTRUMENTATION, VALVING, AND FLOW CONTROL MORE CLEARLY SHOWN IN P&ID SHEETS.

2. PFD SPECIFIC ABBREVIATIONS:
   - AA = ACETIC ACID
   - ACH = ALUMINUM CHLOROHYDRATE
   - CP = CONTROL POINT
   - FC = FERRIC CHLORIDE
   - PA = PHOSPHORIC ACID
   - NaOH = SODIUM HYDROXIDE
   - SHC = SODIUM HYPOCHLORITE
   - SP = SAMPLE PORT

REVISIONS

NO	DATE	BY	DESCRIPTION
A	10/3/25	FT	30% SUBMITTAL
B	12/1/225	FT	60% SUBMITTAL
C	03/03/26	FT	90% SUBMITTAL

The installation shown is to be installed in accordance with the Arizona Water Company standard specifications on file with the Arizona Department of Environmental Quality

Registered Professional Engineer (Civil)
CERTIFICATE NO. 36184
STATE OF ARIZONA
Date signed 03/03/26
Not valid for other discipline(s) or purposes

P.E. No:
W.A. No:
SYSTEM:
LEGAL DESC:
TAX DIST.:
SIB No:
DATE: 03/03/2026
SCALE: AS SHOWN
DRAWN BY: JLC
REVIEWED BY: SDC
CHECKED BY: FHT

ARIZONA WATER COMPANY
3805 N. BLACK CANYON HWY. POST OFFICE BOX 29006
PHOENIX, ARIZONA 85038-9006
(602) 240-6860

PROJECT DESC.: STANFIELD GWS&T USBR GRANT COORDINATION

PROJECT SHEET DESC.: PROCESS FLOW DIAGRAM 2

consor

DWG. No.: G-007

SHEET 7 OF 80

Drawing Path and Name: C:\Users\derek.cloud\DC\ACCDocs\Consor\Stanfield GWS&T USBR Grant Coordination\Project Files\1-Design\01-GEN\1-SHEETS\W242167AZ.00_G-006_007.dwg, Plotted Date: March 9, 2026 1:43 PM By: Derek Cloud

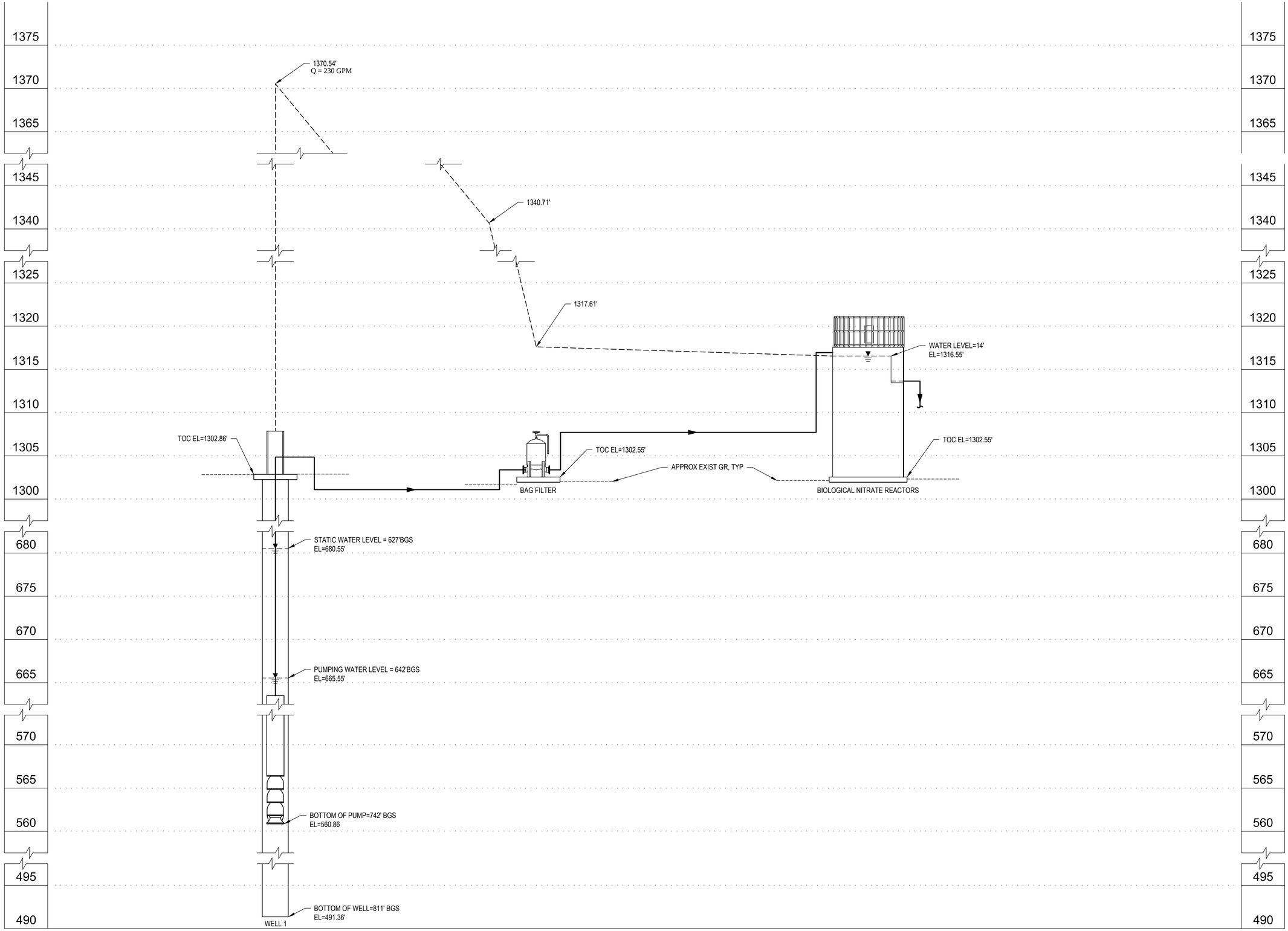

HYDRAULIC PROFILE A-A: WELL 1 TO NITRATE BIOREACTORS

SCALE: NTS HORIZ, 1"=5' VERT

consor

REVISIONS

NO	DATE	BY	DESCRIPTION
A	10/3/25	FT	30% SUBMITTAL
B	12/12/25	FT	60% SUBMITTAL
C	03/03/26	FT	90% SUBMITTAL

The installation shown is to be installed in accordance with the Arizona Water Company's standard specifications on file with the Arizona Department of Environmental Quality

Registered Professional Engineer (Civil)
CERTIFICATE NO. 32671
STATE OF ARIZONA
Date signed 03/03/26
Not valid for other purposes or if altered

W.A. No.:
P.E. No.:
SYSTEM:
LEGAL DESC.:
TAX DIST.:
SIB No.:
DATE: 03/03/2026
SCALE: AS SHOWN
DRAWN BY: JLC
REVIEWED BY: SDC
CHECKED BY: FHT

ARIZONA WATER COMPANY
3805 N. BLACK CANYON HWY. POST OFFICE BOX 29006
PHOENIX, ARIZONA 85038-9006
(602) 240-6860

PROJECT DESC.: STANFIELD GWS&T USBR GRANT COORDINATION

PROJECT SHEET DESC.: HYDRAULIC PROFILE

DWG. No.: G-008

SHEET 8 OF 80

Drawing Path and Name: C:\Users\derek.cloud\DC\ACCDocs\Consor\Stanfield GWS&T USBR Grant Coordination\Project Files\1-Design\01-GEN\1-SHEETS\W242167AZ_00_G-008.dwg, Plotted Date: March 9, 2026 1:05 PM By: Derek Cloud

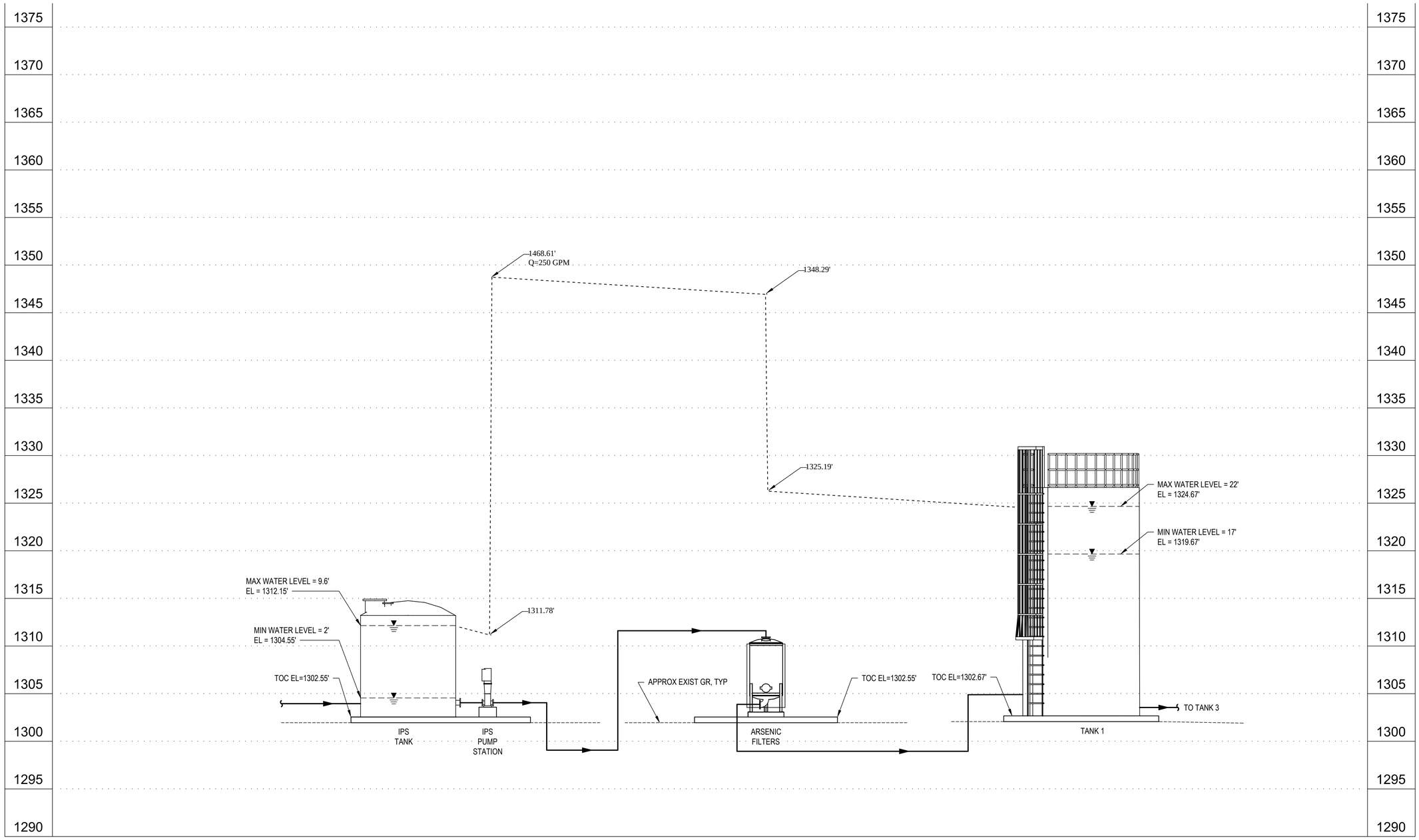

HYDRAULIC PROFILE E-E: IPS TANK TO ARSENIC FILTERS TO TANK 1

SCALE: NTS HORIZ, 1"=5' VERT

consor

REVISIONS

NO	DATE	BY	DESCRIPTION
A	10/3/25	FIT	30% SUBMITTAL
B	12/1/225	FIT	60% SUBMITTAL
C	03/03/26	FIT	90% SUBMITTAL

The installation shown is to be installed in accordance with the Arizona Water Company standard specifications on file with the Arizona Department of Environmental Quality

Issued as Issue FIT if Issue was left blank
Issued as Issue FIT if Issue was left blank
Issued as Issue FIT if Issue was left blank

PLANT MODE

WELL #1 LEAD
WELL #3 LAG

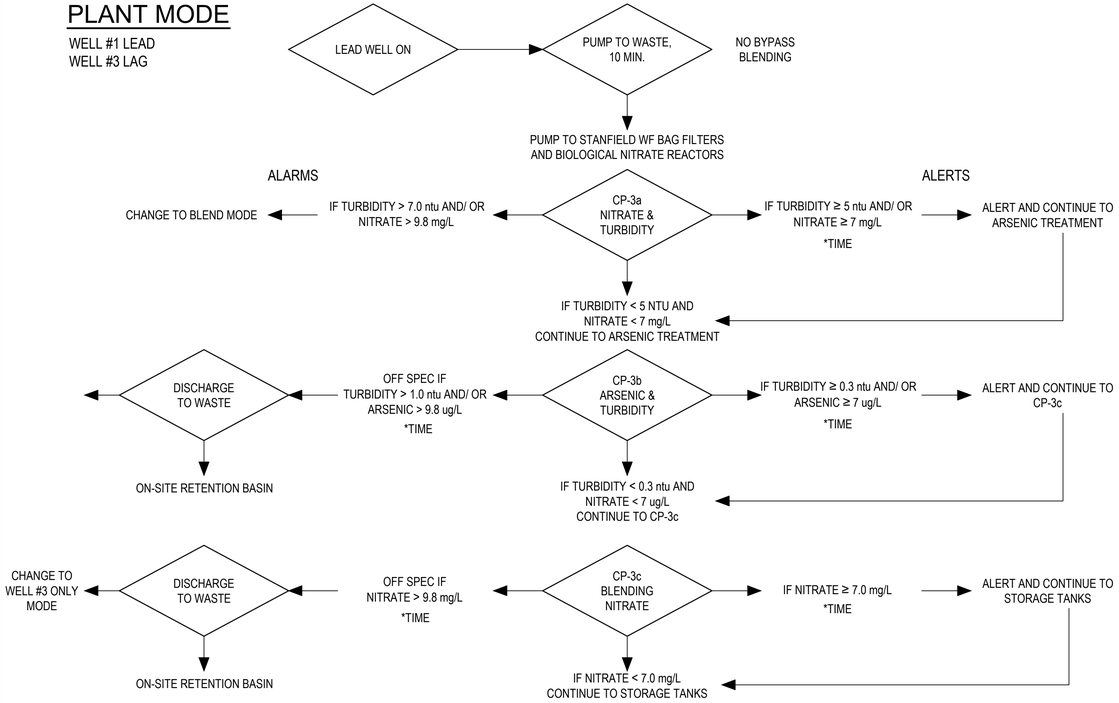

WELL 3 ONLY MODE

WELL #3 LEAD
WELL #1 LAG

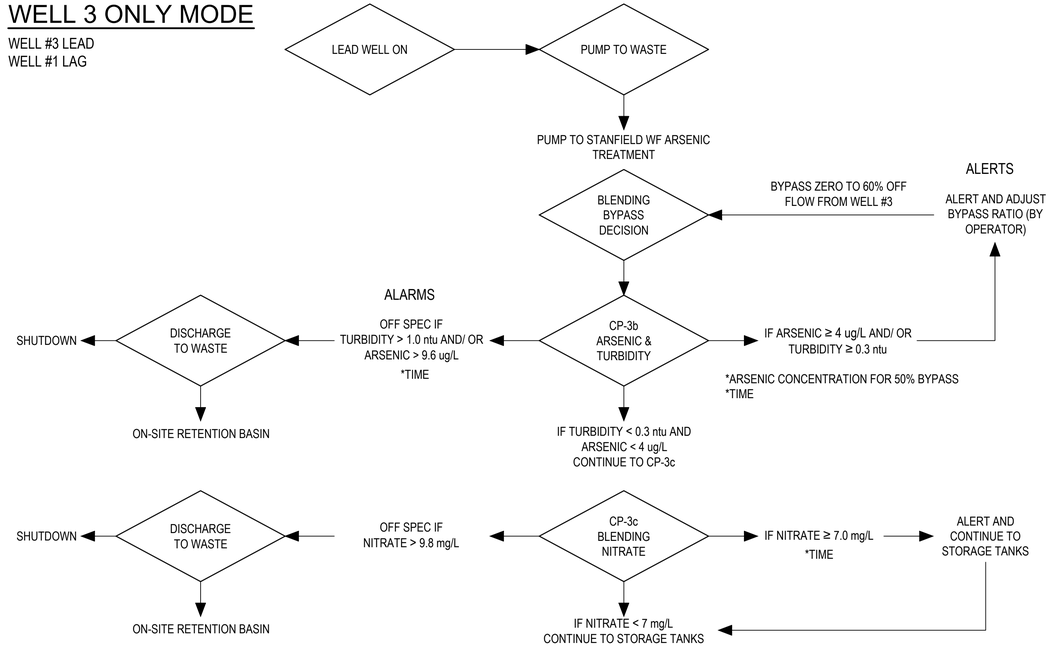

BLEND MODE

WELL #1 LEAD
WELL #3 LAG

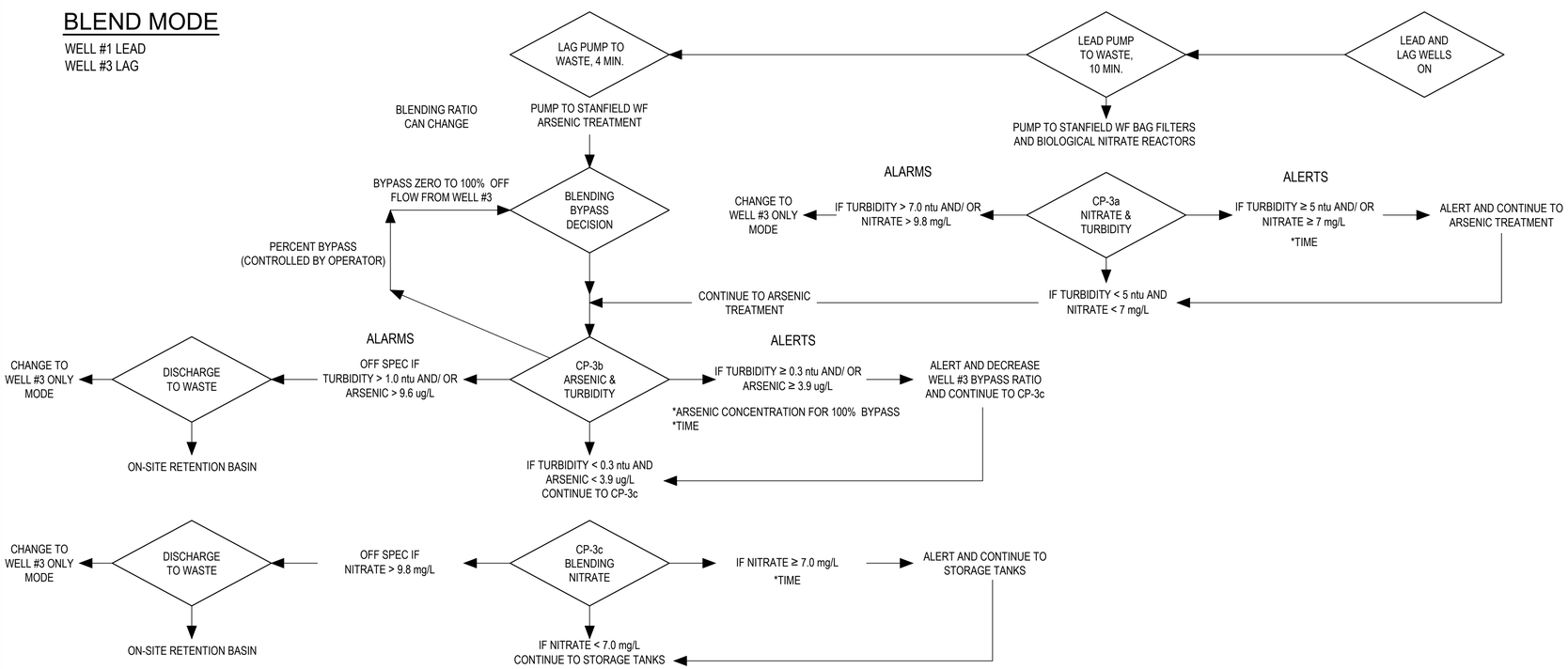

REVISIONS

NO	DATE	BY	DESCRIPTION
A	10/3/25	FT	30% SUBMITTAL
B	12/12/25	FT	60% SUBMITTAL
C	03/03/26	FT	90% SUBMITTAL

The installation shown is to be installed in accordance with the Arizona Water Company standard specifications on file with the Arizona Department of Environmental Quality

Arizona Blue Stake, Inc. 811 or Call two full working days before you dig, it's the law.
Call 811 or visit azbluestake.com

P.E. No.:
W.A. No.:
SYSTEM:
LEGAL DESC.:
TAX DIST.:
SIB No.:
DATE: 03/03/2026
SCALE: AS SHOWN
DRAWN BY: JLC
REVIEWED BY: SDC
CHECKED BY: FHT

ARIZONA WATER COMPANY
3805 N. BLACK CANYON HWY. POST OFFICE BOX 29006
PHOENIX, ARIZONA 85038-9006
(602) 240-6860

PROJECT DESC.: STANFIELD GWS&T USBR GRANT COORDINATION
PROJECT SHEET DESC.: PROCESS DESIGN AND OPERATIONAL CRITERIA

consor

DWG. No.: G-010

Drawing Path and Name: C:\Users\derek.cloud\DC\ACCDocs\Consor\Stanfield GWS&T USBR Grant Coordination\Project Files\1-Design\01-GEN\1-SHEETS\W242167AZ.00_G-009.dwg, Plotted Date: March 9, 2026 1:11 PM By: Derek Cloud

TOPOGRAPHIC LEGEND

	EXISTING	PROPOSED
WATERLINE	10"W	12"DI W
ELECTRICITY (UNDERGROUND)	E	E
OVERHEAD UTILITY	OVHD	OVHD
GAS	4"G	4"G
TELEPHONE/TELEMETRY	T	T
CABLE TELEVISION	CATV	CATV
COMMUNICATION	COM	COM
FIBER OPTIC	FO	FO
SANITARY SEWER LINE	8"SS	8"SS
SANITARY SEWER FORCE MAIN	6"SSFM	6"FM
STORM DRAIN	8"SD	8"SD
DRAIN	D	D
CULVERT	18"SD	18"SD
ABANDONED PIPE	10"W (ABAND)	
DEMOLISH/ REMOVE		
DRAINAGE DITCH		
TOP OF SLOPE	TOP	TOP
TOE OF SLOPE	TOE	TOE
CUT		C
FILL		F
BARBWIRE FENCE		
CHAIN LINK FENCE		
WOOD FENCE		
TEMPORARY SILT FENCE		
GUARDRAIL		
ROCK WALL		
TREE/BUSH LINE		
WETLAND		
CENTERLINE		
RIGHT-OF-WAY	R/W	R/W
PROPERTY LINE		
EASEMENT		
EDGE OF PAVEMENT/AC		
PAVEMENT STRIPING		
EDGE OF GRAVEL		
CURB		
SIDEWALK	S/W	S/W
STRUCTURE OR FACILITY		
CONTOUR MINOR		
CONTOUR MAJOR	200	200

	EXISTING	PROPOSED
MANHOLE	SS SD W C T	SS SD W C T
CLEAN-OUT		
CATCH BASIN/FIELD INLET		
THRUST BLOCK		
VALVE		
AIR INJECTION ASSEMBLY		
BLOW-OFF ASSEMBLY (PERMANENT)		
BLOW-OFF ASSEMBLY (TEMPORARY)		
AIR RELEASE ASSEMBLY		
FIRE HYDRANT ASSEMBLY		
WATER METER		
FIRE DEPARTMENT CONNECTION		
WATER IRRIGATION VALVE	IR	IR
PULL BOX/JUNCTION BOX		
COM RISER		
UTILITY POLE		
GUY WIRE		
LIGHT POST		
STREET LIGHT		
TRANSFORMER		
ELECTRICAL METER	M	
ELECTRICAL CABINET		
GAS METER		
GAS VALVE		
MAILBOX		
SIGN		
TREE DECIDUOUS		
TREE CONIFEROUS		
TREE TO BE REMOVED		
SURFACE ELEVATION	+ 176.63	+ 176.63
WETLAND FLAG		
BENCHMARK		
IRON ROD		
MONUMENT/ CONTROL POINT		
BORE/ POTHOLE		
TEST PIT		
BOLLARD		

SCHEMATIC	
	WELDED JOINT
	FLANGED JOINT
	GROOVED END JOINT
	MECHANICAL JOINT
	PUSH-ON JOINT (RUBBER GASKET)
	FLANGED COUPLING ADAPTER
	DOUBLE BALL FLEXIBLE EXTENSION COUPLING
	FLEXIBLE COUPLING W/ THRUST RING
	90° BEND UP
	90° BEND DOWN
	TEE UP
	TEE DOWN
	LATERAL UP
	LATERAL DOWN
	CONCENTRIC REDUCER
	ECCENTRIC REDUCER
	UNION
	BLIND FLANGE
	CAP/ PLUG
	LONG SLEEVE
	FLEXIBLE COUPLING
	FITTING (45°)
	SADDLE OR HOT TAP
	STRAINER
	SIGHT GLASS
M	METER
SP	SLIP-ON JOINT PIPE
R	RESTRAINED JOINT PIPE

SCHEMATIC	
	BUTTERFLY VALVE
	GATE VALVE
	GLOBE VALVE
	BALL VALVE
	BALANCING VALVE
	PLUG VALVE (TOP)
	PLUG VALVE (SIDE)
	3-WAY PLUG VALVE
	CHECK VALVE
	SWING CHECK VALVE
	DOUBLE CHECK ASSEMBLY
	BALL SWING CHECK
	SILENT CHECK VALVE
	PRESSURE REDUCING VALVE
	ALTITUDE CONTROL VALVE
	SOLENOID VALVE
	RELIEF VALVE
	NEEDLE VALVE
	HOSE VALVE
	HOSE BIBB
	REDUCED PRESSURE BACKFLOW PREVENTER W/ GATE VALVES
	PRESSURE GAUGE W/ COCK
	PRESSURE SWITCH W/ COCK

GENERAL NOTE:

1. THIS IS A STANDARD CIVIL LEGEND, NOT ALL OF THE INFORMATION SHOWN MAY BE USED ON THIS PROJECT.

consor

REVISIONS:

NO	DATE	BY	DESCRIPTION
A	10/3/25	FT	30% SUBMITTAL
B	12/12/25	FT	60% SUBMITTAL
C	03/03/26	FT	90% SUBMITTAL

The installation shown is to be installed in accordance with the Arizona Water Company standard specifications on file with the Arizona Department of Environmental Quality

Assured at Arizona 811 at least two full working days prior to the start of excavation

Call 811 or other Arizona811 Members

W.A. No.:
P.E. No.:
SYSTEM:
LEGAL DESC.:
TAX DIST.:
SBB No.:
DATE: 03/03/2026
SCALE: AS SHOWN
DRAWN BY: JLC
REVIEWED BY: SDC
CHECKED BY: FHT

ARIZONA WATER COMPANY
3805 N. BLACK CANYON HWY. POST OFFICE BOX 29006
PHOENIX, ARIZONA 85038-9006
(602) 240-6860

PROJECT DESC: STANFIELD GWS&T USBR GRANT COORDINATION

PROJECT SHEET DESC: CIVIL SYMBOLS AND LEGEND

DWG. No.: C-001

Drawing Path and Name: C:\Users\jgoddard\DC\ACCDocs\Consor\Stanfield GWS&T USBR Grant Coordination\Project Files\1-Design\02-CIVIL\2-SHEETS\W242167AZ.00_C-001.dwg, Plotted Date: March 9, 2026 12:46 PM By: Joshua Goddard

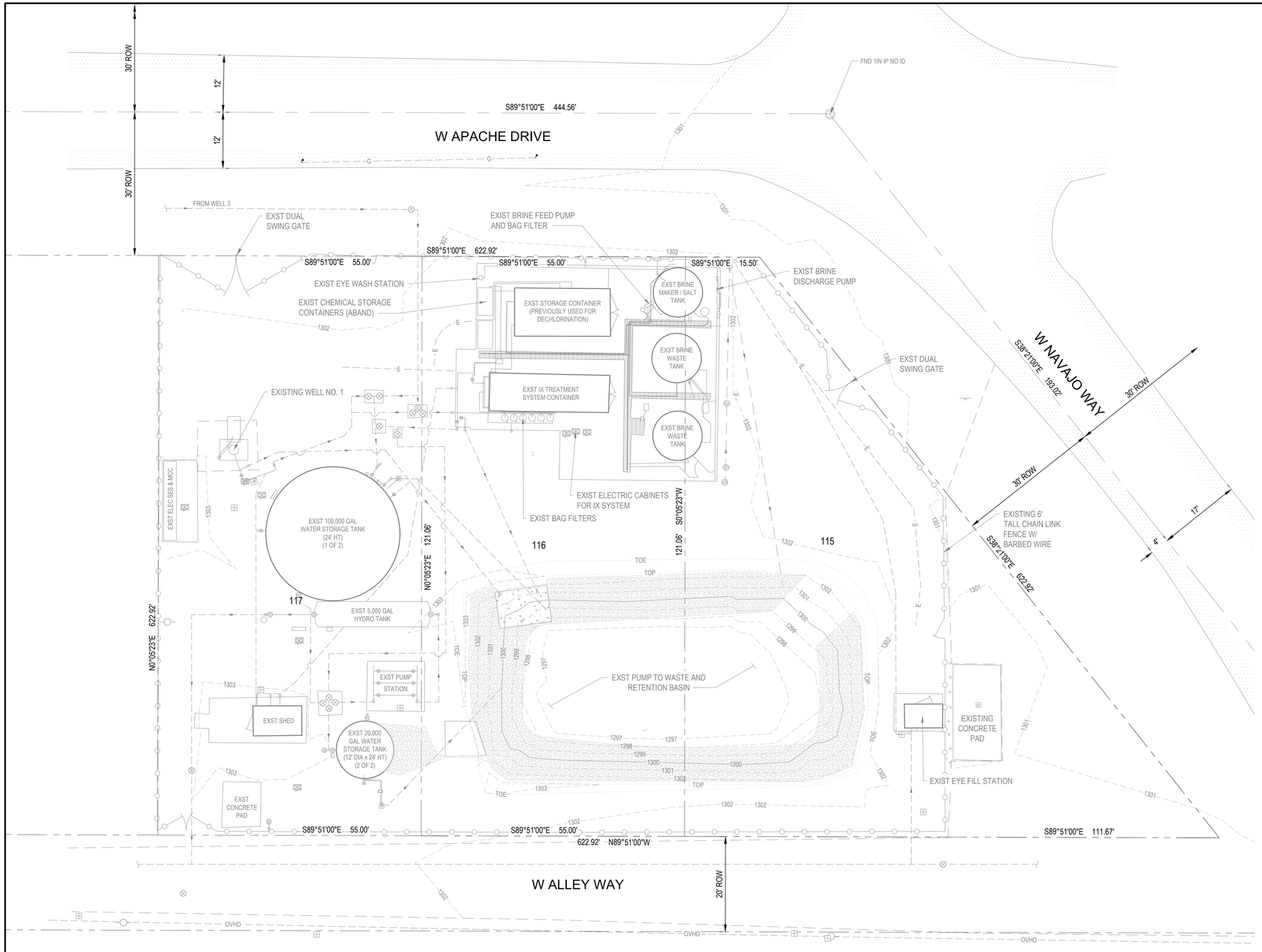

PLAN
SCALE: 1"=10'

REVISIONS:			
NO	DATE	BY	DESCRIPTION
A	10/3/25	FT	30% SUBMITTAL
B	12/12/25	FT	60% SUBMITTAL
C	03/03/26	FT	90% SUBMITTAL

The installation shown is to be installed in accordance with the Arizona Water Company standard specifications on file with the Arizona Department of Environmental Quality

Around or Above 811 at least one full working day before you start your project.
Call 811 or other Arizona 811 centers

W.A. No.:
SYSTEM:
LEGAL DESC.:
TAX DIST.:
P.E. No.:
SB No.:
DATE: 03/03/2026
SCALE: AS SHOWN
DRAWN BY: JLC
REVIEWED BY: SDC
CHECKED BY: FHT

ARIZONA WATER COMPANY
3805 N. BLACK CANYON HWY. POST OFFICE BOX 29006
PHOENIX, ARIZONA 85038-9006
(602) 240-6860

PROJECT DESC: STANFIELD GWS&T USBR GRANT COORDINATION
PROJECT SHEET DESC: EXISTING SITE PLAN AND SURVEY CONTROL

consor

DWG. No.: C-010
SHEET 12 OF 80

Drawing Path and Name: C:\Users\jgoddard\DC\ACCDocs\Consor\Stanfield GWS&T USBR Grant Coordination\Project Files\1-Design\02-CIVIL\2-SHEETS\W242167AZ.00_C-010.dwg, Plotted Date: March 9, 2026 12:46 PM By: Joshua Goddard

KEY NOTES

1. REMOVE EXISTING CHAIN LINK FENCE AND GATES, APPROX 280 LF
2. EXISTING TANKS TO BE REMOVED AND RELOCATED, SEE C-100
3. REMOVE AND SALVAGE EXISTING ABANDONED CHEMICAL CONTAINERS
4. CUT AND CAP ALL PIPE AND CONDUIT AND REROUTE AS NEEDED
5. REMOVE AND SALVAGE EXISTING CONTAINER AND DELIVER TO OWNER IN DICATED LOCATION
6. PROTECT IN PLACE
7. REMOVE AND SALVAGE EXISTING EYE WASH AND RELOCATE TO SIDE OF EXISTING BRINE TANK

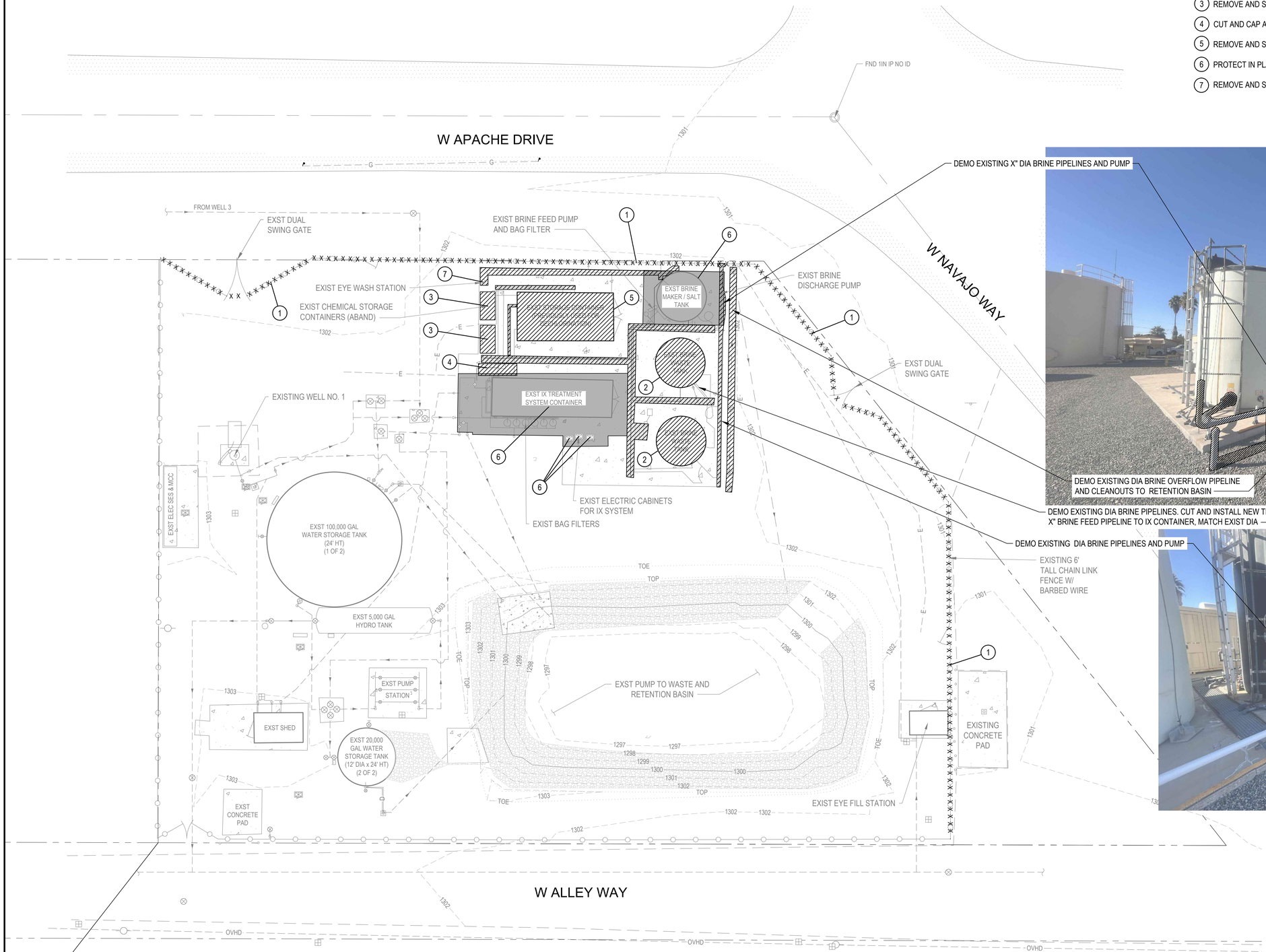

PLAN
SCALE: 1"=10'

REVISIONS:			
NO	DATE	BY	DESCRIPTION
A	10/3/25	FT	30% SUBMITTAL
B	12/12/25	FT	60% SUBMITTAL
C	03/03/26	FT	90% SUBMITTAL

The Installation shown is to be installed in accordance with the Arizona Water Company standard specifications on file with the Arizona Department of Environmental Quality

Arizona Blue Stake, Inc. 1-800-782-5348 (602) 263-1100

W.A. No.:
P.E. No.:
SYSTEM:
LEGAL DESC.:
TAX DIST.:
SBB No.:
DATE: 03/03/2026
SCALE: AS SHOWN
DRAWN BY: JLC
REVIEWED BY: SDC
CHECKED BY: FHT

ARIZONA WATER COMPANY
3805 N. BLACK CANYON HWY. POST OFFICE BOX 29006
PHOENIX, ARIZONA 85038-9006
(602) 240-6860

PROJECT DESC: STANFIELD GWS&T USBR GRANT COORDINATION
PROJECT SHEET DESC: DEMOLITION AND SITE PREPARATION PLAN - EQUIPMENT

DWG. No.: C-011
SHEET 13 OF 80

consor

Drawing Path and Name: C:\Users\jgoddard\DC\ACCDocs\Consor\Stanfield GWS&T USBR Grant Coordination\Project Files\1-Design\02-CIVIL\2-SHEETS\W242167AZ.00_C-011.dwg, Plotted Date: March 9, 2026 12:46 PM By: Joshua Goddard

KEY NOTES

1. DEMO EXISTING CONCRETE
2. PROTECT IN PLACE

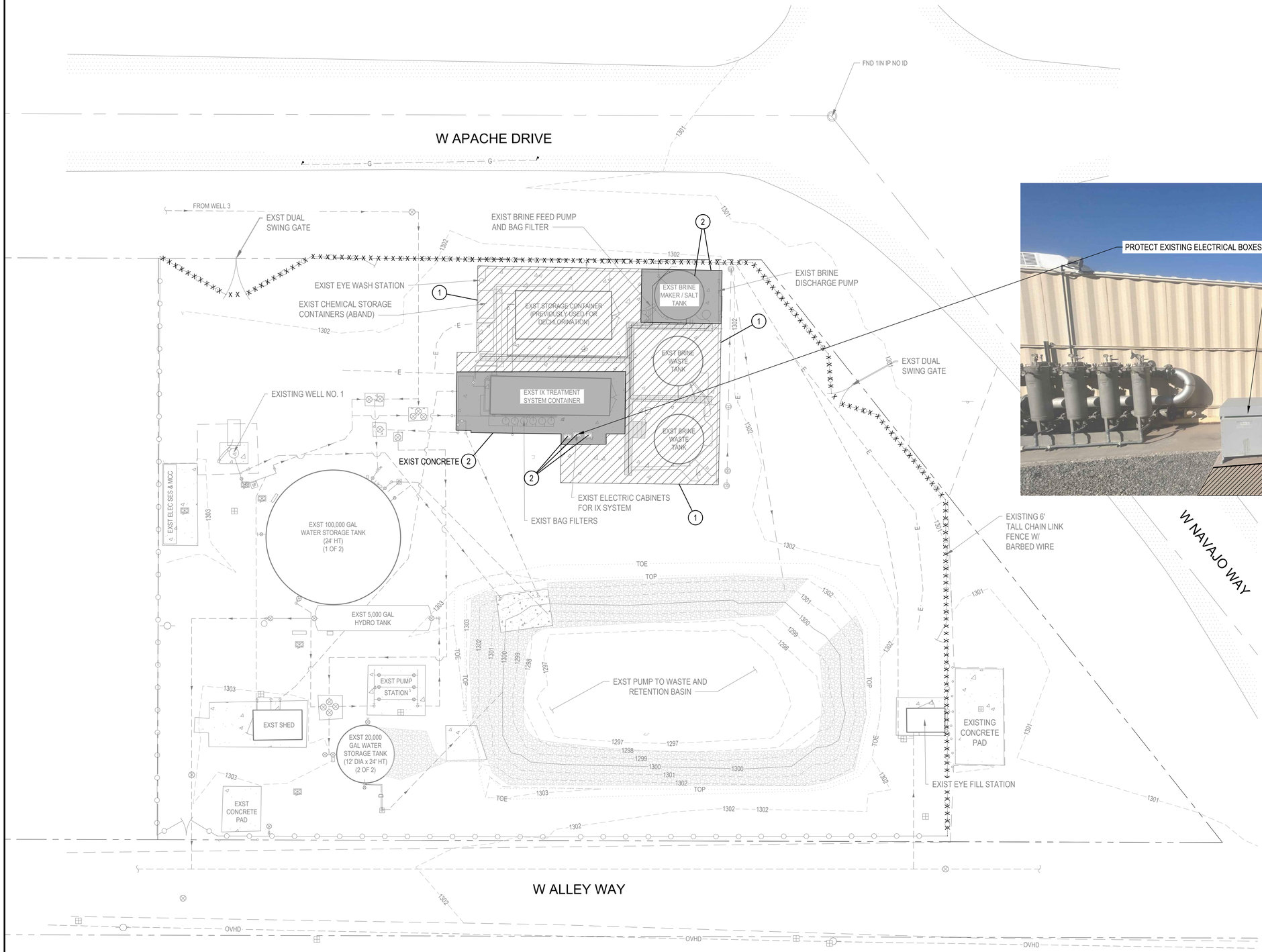

PLAN
SCALE: 1"=10'

REVISIONS:

NO	DATE	BY	DESCRIPTION
A	10/3/25	FT	30% SUBMITTAL
B	12/12/25	FT	60% SUBMITTAL
C	03/03/26	FT	90% SUBMITTAL

The installation shown is to be installed in accordance with the Arizona Water Company standard specifications on file with the Arizona Department of Environmental Quality

Blue stakes Arizona 811 at least one full working day before you start work. Call 811 or other Arizona811 Members

W.A. No.:
SYSTEM#:
LEGAL DESC.:
TAX DIST.:
P.E. No.:
SBB No.:
DATE: 03/03/2026
SCALE: AS SHOWN
DRAWN BY: JLC
REVIEWED BY: SDC
CHECKED BY: FHT

ARIZONA WATER COMPANY
3805 N. BLACK CANYON HWY. POST OFFICE BOX 29006
PHOENIX, ARIZONA 85038-9006
(602) 240-6860

PROJECT DESC: STANFIELD GWS&T USBR GRANT COORDINATION
PROJECT SHEET DESC: DEMOLITION AND SITE PREPARATION PLAN - SURFACES AND PIPES

consor

DWG. No.: C-012
SHEET 14 OF 80

Drawing Path and Name: C:\Users\jgoddard\DC\ACCDocs\Consor\Stanfield GWS&T USBR Grant Coordination\Project Files\1-Design\02-CIVIL\2-SHEETS\W242167AZ.00_C-011.dwg, Plotted Date: March 9, 2026 12:46 PM By: Joshua Goddard

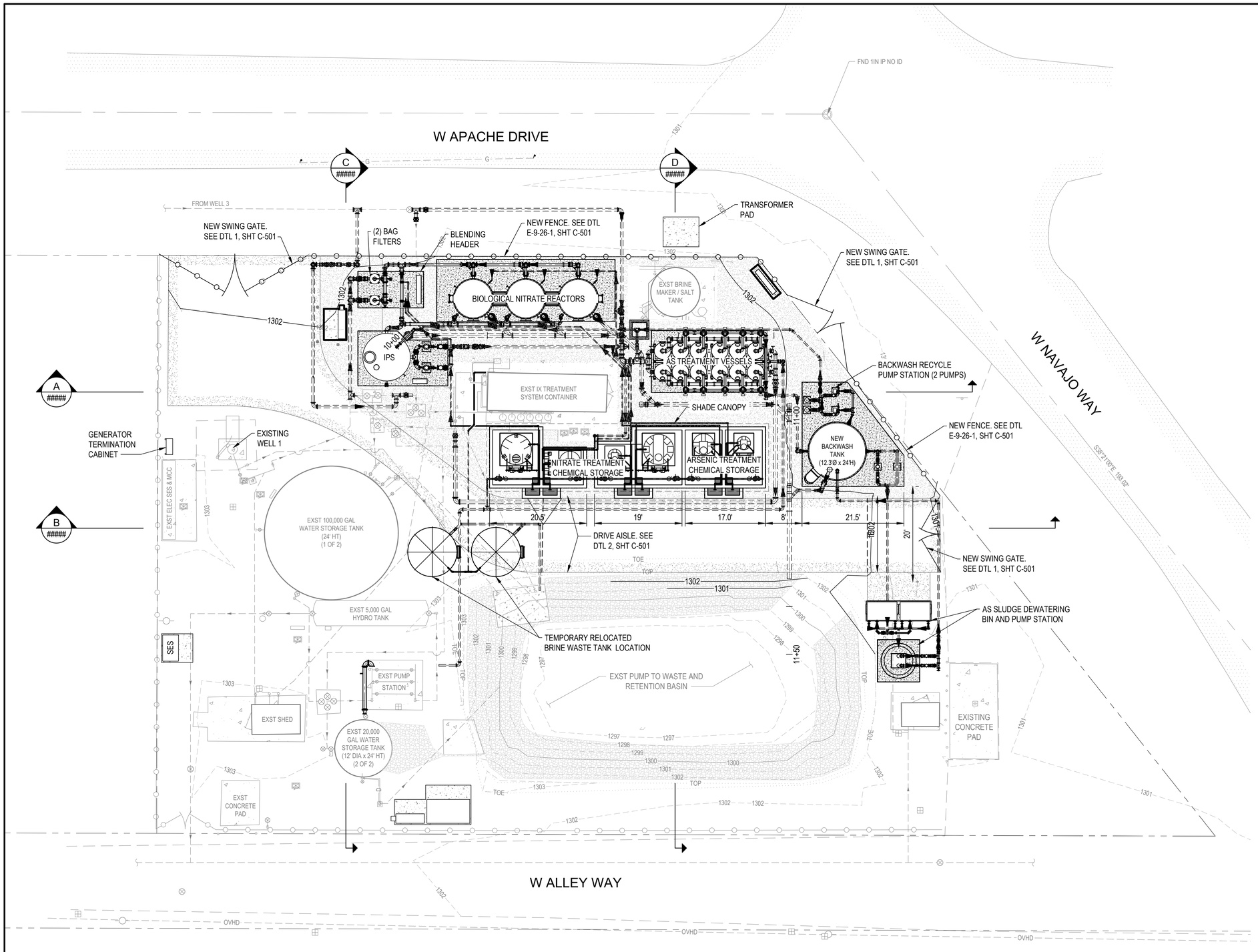

PLAN
SCALE: 1"=10'

REVISIONS:

NO	DATE	BY	DESCRIPTION
A	10/3/25	FT	30% SUBMITTAL
B	12/12/25	FT	60% SUBMITTAL
C	03/03/26	FT	90% SUBMITTAL

The Installation shown is to be Installed In accordance with the Arizona Water Company standard specifications on file with the Arizona Department of Environmental Quality

Revised drawings are to at least one full working day before the date of work commences

Call 811 or other Arizona Blue Stake, Inc. member

W.A. No.:
SYSTEM:
P.E. No.:
LEGAL DESC.:
TAX DIST.:
SBI No.:
DATE: 03/03/2026
SCALE: AS SHOWN
DRAWN BY: JLC
REVIEWED BY: SDC
CHECKED BY: FHT

ARIZONA WATER COMPANY
3805 N. BLACK CANYON HWY. POST OFFICE BOX 29006
PHOENIX, ARIZONA 85038-9006
(602) 240-6860

PROJECT DESC.: STANFIELD GWS&T USBR GRANT COORDINATION
PROJECT SHEET DESC.: OVERALL SITE PLAN

consor

DWG. No.: C-100
SHEET 15 OF 80

Drawing Path and Name: C:\Users\jgoddard\DC\ACCDocs\Consor\Stanfield GWS&T USBR Grant Coordination\Project Files\1-Design\02-CIVIL\2-SHEETS\W242167AZ.00_C-100.dwg, Plotted Date: March 9, 2026 12:47 PM By: Joshua Goddard

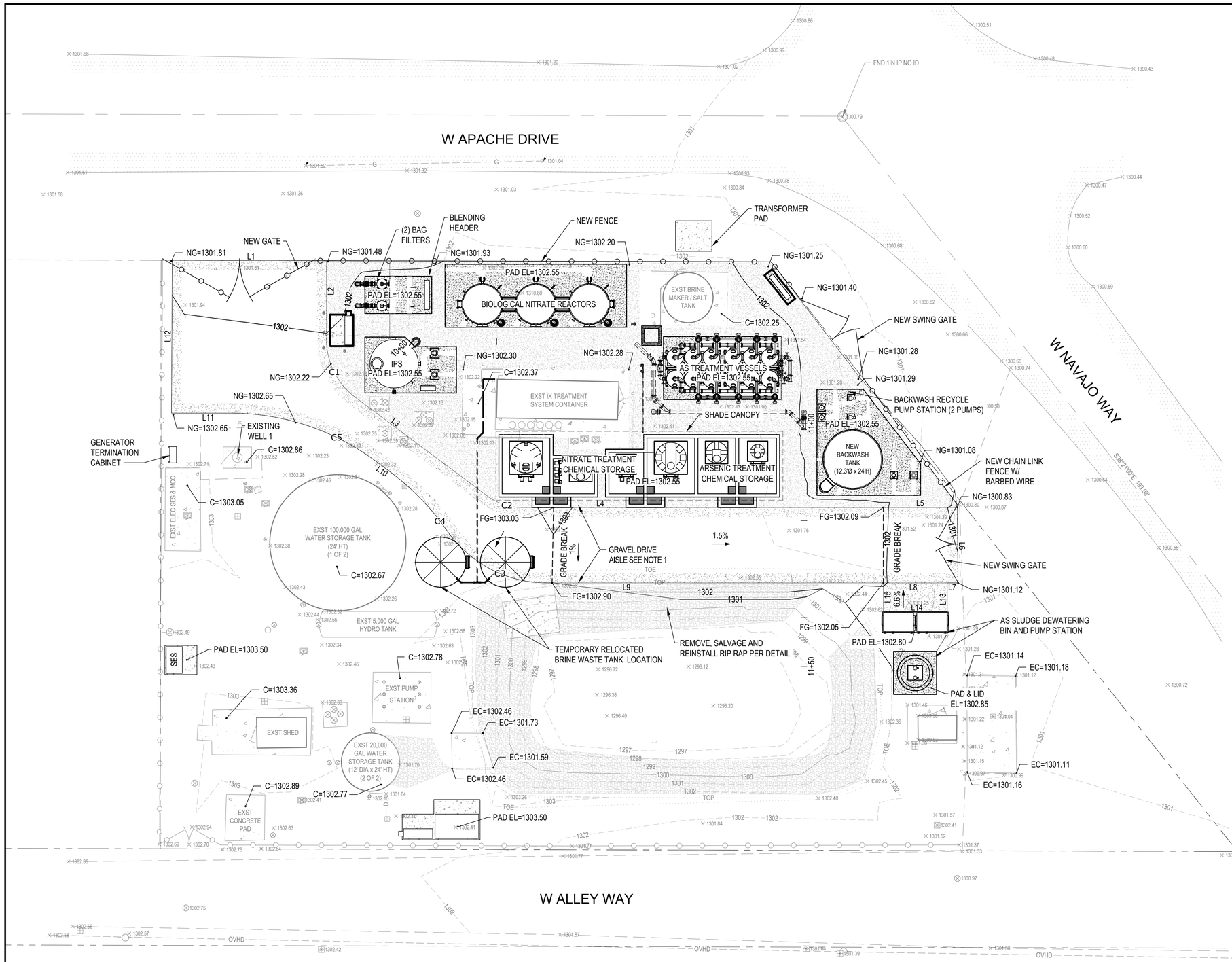

EDGE OF GRAVEL LINE DATA TABLE

Line #	LINE START	LINE END	LENGTH	DIRECTION	ELEVATION
L1	N684157.241 E685973.524	N684157.158 E686005.259	31.735	S89° 51' 00.00"E	1301.805 1301.470
L2	N684157.158 E686005.259	N684140.978 E686005.259	16.180	S00° 00' 00.00"E	1301.470 1302.021
L3	N684128.961 E686011.281	N684108.758 E686038.324	33.756	S53° 14' 11.78"E	1302.254 1302.818
L4	N684106.371 E686045.506	N684106.371 E686119.817	74.311	N90° 00' 00.00"E	1302.946 1302.089
L5	N684106.371 E686119.817	N684106.371 E686135.041	15.223	N89° 59' 58.92"E	1302.089 1300.834
L6	N684106.371 E686135.041	N684090.871 E686135.195	15.501	S00° 34' 11.79"E	1300.834 1301.118
L7	N684090.871 E686135.195	N684090.871 E686132.969	2.226	S89° 59' 44.36"W	1301.118 1301.253
L8	N684090.871 E686132.969	N684090.870 E686119.817	13.152	S89° 59' 44.36"W	1301.253 1302.050
L9	N684090.870 E686119.817	N684090.865 E686050.584	69.233	S89° 59' 44.36"W	1302.050 1302.913
L10	N684113.623 E686018.445	N684115.831 E686015.489	3.690	N53° 14' 11.78"W	1302.327 1302.354
L11	N684125.775 E685985.557	N684125.774 E685973.353	12.204	S89° 59' 33.28"W	1302.639 1302.660
L12	N684125.774 E685973.353	N684157.241 E685973.524	31.467	N00° 18' 40.55"E	1302.660 1301.805
L13	N684084.961 E686132.969	N684090.871 E686132.969	5.910	N00° 00' 00.00"E	1301.253 1301.642
L14	N684084.961 E686119.817	N684084.961 E686132.969	13.152	N90° 00' 00.00"E	1301.642 1301.658
L15	N684090.870 E686119.817	N684084.961 E686119.817	5.909	S00° 00' 00.00"E	1301.658 1302.050

EDGE OF GRAVEL CURVE DATA TABLE

#	PC LOCATION	PT LOCATION	RADIUS	LENGTH	DELTA	ELEVATION
C1	N684140.98 E686005.26	N684128.96 E686011.28	15.00'	13.94'	53°14'12"	1302.021 1302.254
C2	N684108.76 E686038.32	N684106.37 E686045.51	12.00'	7.70'	36°45'49"	1302.818 1302.946
C3	N684090.86 E686050.58	N684101.61 E686030.04	25.00'	24.11'	55°14'43"	1302.913 1302.267
C4	N684101.61 E686030.04	N684113.62 E686018.45	52.00'	16.77'	18°28'39"	1302.267 1302.327
C5	N684115.83 E686015.49	N684125.78 E685985.56	50.00'	32.09'	36°46'15"	1302.354 1302.639

PLAN
SCALE: 1"=10'

NOTES:

1. SEE DET X, SHT X FOR GRAVEL ACCESS AREA SURFACING SECTION AND REQUIREMENTS.
2. SITE SURFACE EXCEPT FOR GRAVEL ACCESS SHALL BE 1/4"± CRUSHED GRANITE

REVISIONS:

NO	DATE	BY	DESCRIPTION
A	10/3/25	FT	30% SUBMITTAL
B	12/12/25	FT	60% SUBMITTAL
C	03/03/26	FT	90% SUBMITTAL

The installation shown is to be installed in accordance with the Arizona Water Company standard specifications on file with the Arizona Department of Environmental Quality

Around underground utilities call 811 at least one full working day before you start work.
Call 811 or visit azbluestake.com

P.E. No.:
W.A. No.:
SYSTEM:
LEGAL DESC.:
TAX DIST.:
SBI No.:
DATE: 03/03/2026
SCALE: AS SHOWN
DRAWN BY: JLC
REVIEWED BY: SDC
CHECKED BY: FHT

ARIZONA WATER COMPANY
3805 N. BLACK CANYON HWY. POST OFFICE BOX 29006
PHOENIX, ARIZONA 85038-9006
(602) 240-6860

PROJECT DESC: STANFIELD GWS&T USBR GRANT COORDINATION
PROJECT SHEET DESC: PAVING, GRADING, AND DRAINAGE PLAN

consor

DWG. No.: C-110
SHEET 16 OF 80

Drawing Path and Name: C:\Users\jgoddard\DC\ACCDocs\Consor\Stanfield GWS&T USBR Grant Coordination\Project Files\1-Design\02-CIVIL\2-SHEETS\W242167AZ.00_C-110.dwg, Plotted Date: March 9, 2026 12:48 PM By: Joshua Goddard

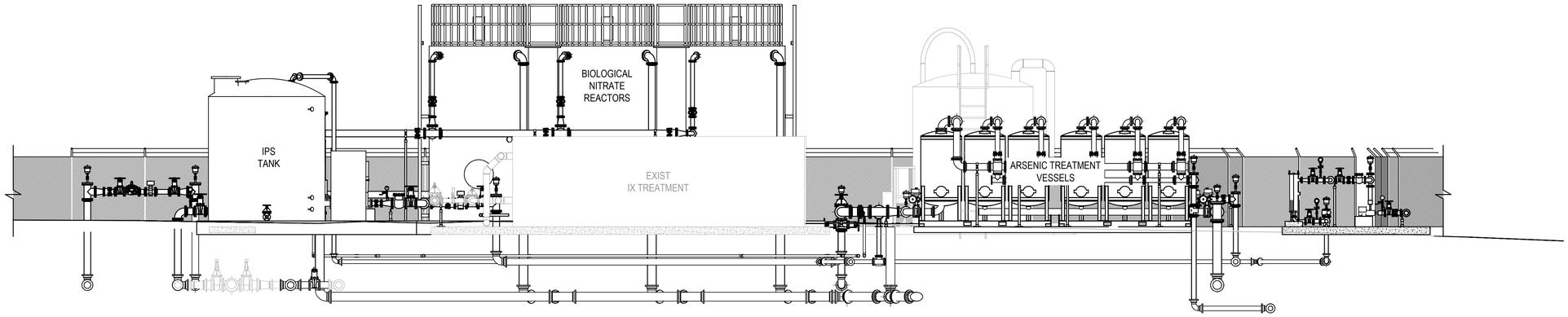

A
C-100
SECTION
SCALE: 1" = 5'

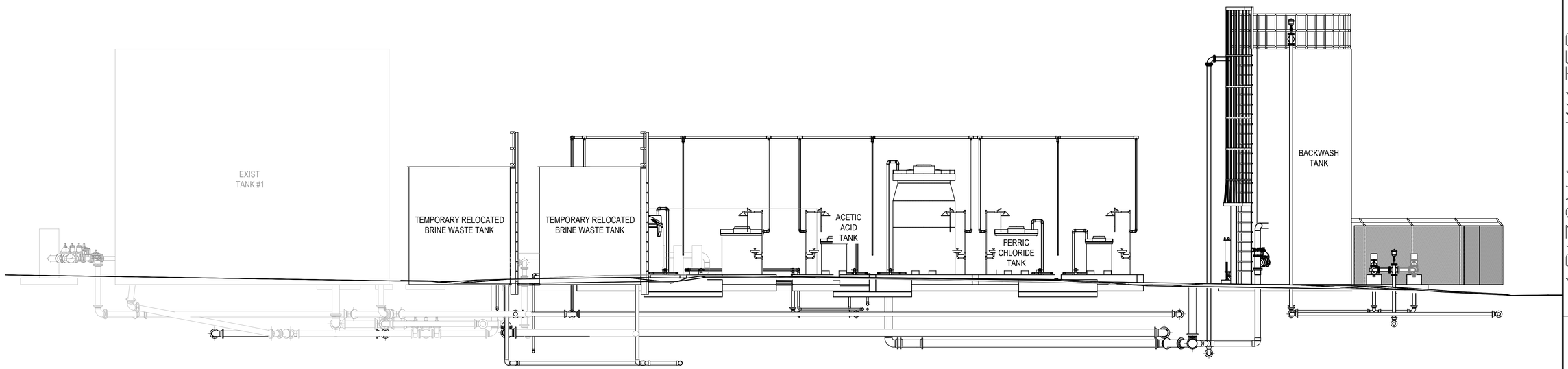

B
C-100
SECTION
SCALE: 1" = 5'

REVISIONS:

NO	DATE	BY	DESCRIPTION
A	10/3/25	FT	30% SUBMITTAL
B	12/12/25	FT	60% SUBMITTAL
C	03/03/26	FT	90% SUBMITTAL

The installation shown is to be installed in accordance with the Arizona Water Company standard specifications on file with the Arizona Department of Environmental Quality

Contact Arizona 811 at least two full working days before you begin excavation
ARIZONA
Call 811 or visit Arizona811.com

W.A. No.:
P.E. No.:
SYSTEM:
LEGAL DESC.:
TAX DIST.:
SIB No.:
DATE: 03/03/2026
SCALE: AS SHOWN
DRAWN BY: JLC
REVIEWED BY: SDC
CHECKED BY: FHT

ARIZONA WATER COMPANY
3805 N. BLACK CANYON HWY. POST OFFICE BOX 29006
PHOENIX, ARIZONA 85038-9006
(602) 240-6860

PROJECT DESC: STANFIELD GWS&T USBR GRANT COORDINATION
PROJECT SHEET DESC: SITE CROSS SECTIONS

DWG. No.: C-301

consor

SHEET 17 OF 80

Drawing Path and Name: C:\Users\jgoddard\DC\ACCDocs\Consor\Stanfield GWS&T USBR Grant Coordination\Project Files\1-Design\02-CIVIL\2-SHEETS\W242167AZ.00_C-301_302.dwg, Plotted Date: March 9, 2026 12:49 PM By: Joshua Goddard

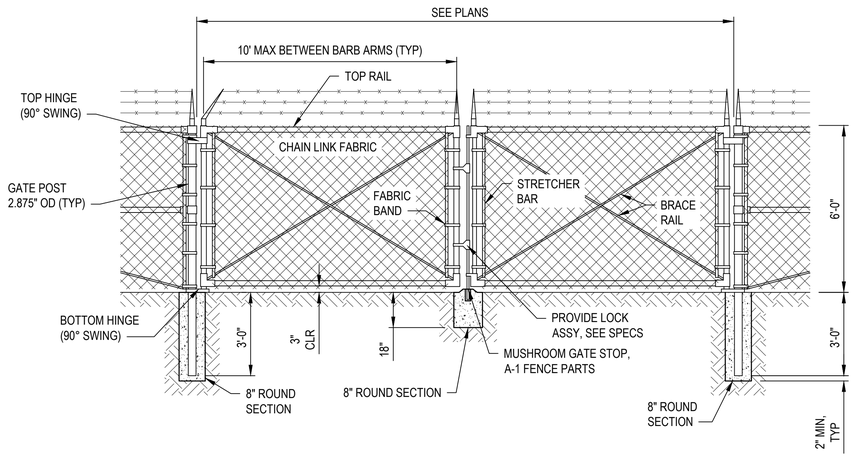

NOTES:

1. PROVIDE LOCK ASSEMBLY AND GATE STOP FOR EACH GATE, SEE SPECIFICATIONS.

1 / C-501 DOUBLE SWING GATE DETAIL
SCALE: NTS

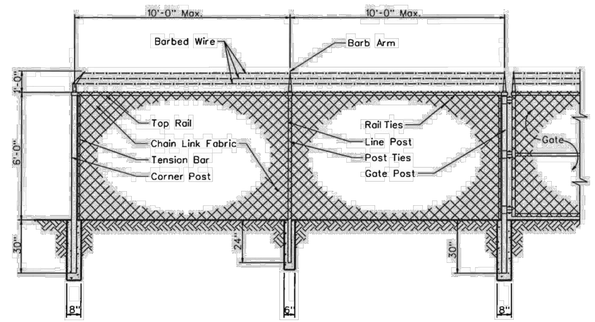

Line Post:	1-7/8" O.D.	1.74 lbs. P/L.F.	ASTM A-256
End Post:	2-7/8" O.D.	4.64 lbs. P/L.F.	ASTM A-256
Corner Post:	2-7/8" O.D.	4.64 lbs. P/L.F.	ASTM A-256
Gate Post:	2-7/8" O.D.	4.64 lbs. P/L.F.	ASTM A-256
Top Rail:	1-5/8" O.D.	4.64 lbs. P/L.F.	ASTM A-256
Chain Link Fabric:	9 Ga. 2" Mesh Galv. Before Weave		
Selvage:	Barb/Knuckle		
Fittings:	Pressed Steel		
Barb Wire:	2-1/2 Ga./2 Point		
Barb Arm:	1 Piece/45° Arm		
Tension Wire:	9 Ga./Galv.		
Line Post Set:	6"x24" In Concrete		
Terminal Post Set:	8"x30" In Concrete		

ARIZONA WATER COMPANY

STANDARD SPECIFICATION
FOR THE INSTALLATION OF
CHAIN LINK FENCE

DRAWN BY:	APPROVED BY:	DATE:	△	
CCO	MW	7/7/1992	2/9/2001	E-9-26-1

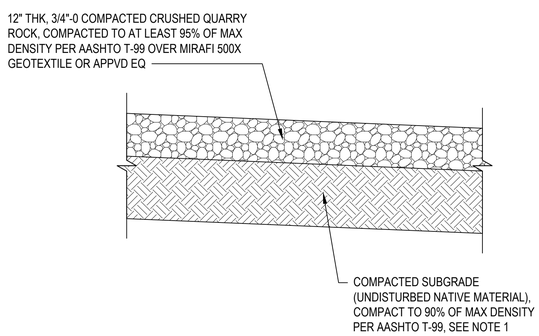

NOTES:

1. ALL PREPARED SUBGRADE SHALL BE FIRM, UNDISTURBED SUBBRADE AND OBSERVED AND APPROVED BY THE GEOTECHNICAL ENGINEER.

2 / C-501 GRAVEL SURFACING SECTION
SCALE: NTS

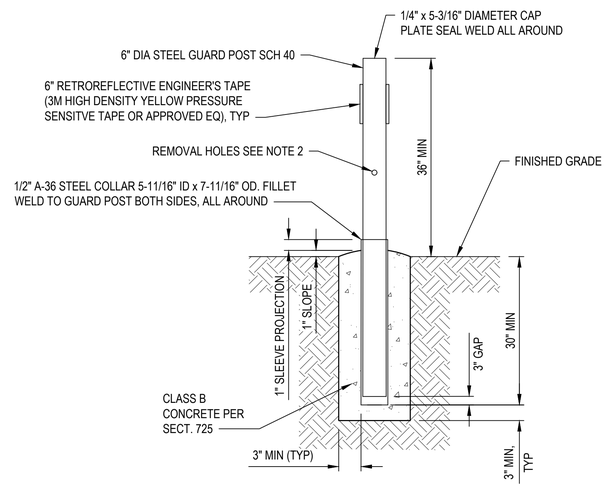

NOTES:

1. BOLLARDS SHALL HAVE A HEIGHT OF 3 FEET OR BE EQUAL TO THE HEIGHT OF THE BACK SCREEN WALL OF BIN ENCLOSURES. POSTS SHALL BE PLACED A MINIMUM OF 4" FROM THE WALL.
2. REMOVABLE POSTS SHALL HAVE 1" DIA HOLES DRILLED THROUGH AT A DISTANCE 1/3 THE OVERALL POST LENGTH FROM TOP
3. REMOVABLE POST - GRIND SMOOTH ALL SHARP EDGES PRIOR TO GALVANIZATION. GALVANIZE PER ASTM A54 AFTER FABRICATION

3 / C-501 6" REMOVABLE BOLLARD
SCALE: NTS

REVISIONS:

NO	DATE	BY	DESCRIPTION
A	10/3/25	FT	30% SUBMITTAL
B	12/12/25	FT	60% SUBMITTAL
C	03/03/26	FT	90% SUBMITTAL

The installation shown is to be installed in accordance with the Arizona Water Company standard specifications on file with the Arizona Department of Environmental Quality

Around underground utilities at least one full working day before you dig, call Arizona Blue Stake, Inc. Call 8(10) or effect (602)263-1011 (Metro)

W.A. No.:
P.E. No.:
SYSTEM:
LEGAL DESC.:
TAX DIST.:
SBB No.:
DATE: 03/03/2026
SCALE: AS SHOWN
DRAWN BY: JLC
REVIEWED BY: SDC
CHECKED BY: FHT

ARIZONA WATER COMPANY
3805 N. BLACK CANYON HWY. POST OFFICE BOX 29006
PHOENIX, ARIZONA 85038-9006
(602) 240-6860

PROJECT DESC: STANFIELD GWS&T USBR GRANT COORDINATION
PROJECT SHEET DESC: CIVIL DETAILS -1

consor

DWG. No.: C-501

Drawing Path and Name: C:\Users\jgoddard\DC\ACCDocs\Consor\Stanfield GWS&T USBR Grant Coordination\Project Files\1-Design\02-CIVIL\2-SHEETS\W242167AZ.00_C-501_502.dwg, Plotted Date: March 9, 2026 12:49 PM By: Joshua Goddard

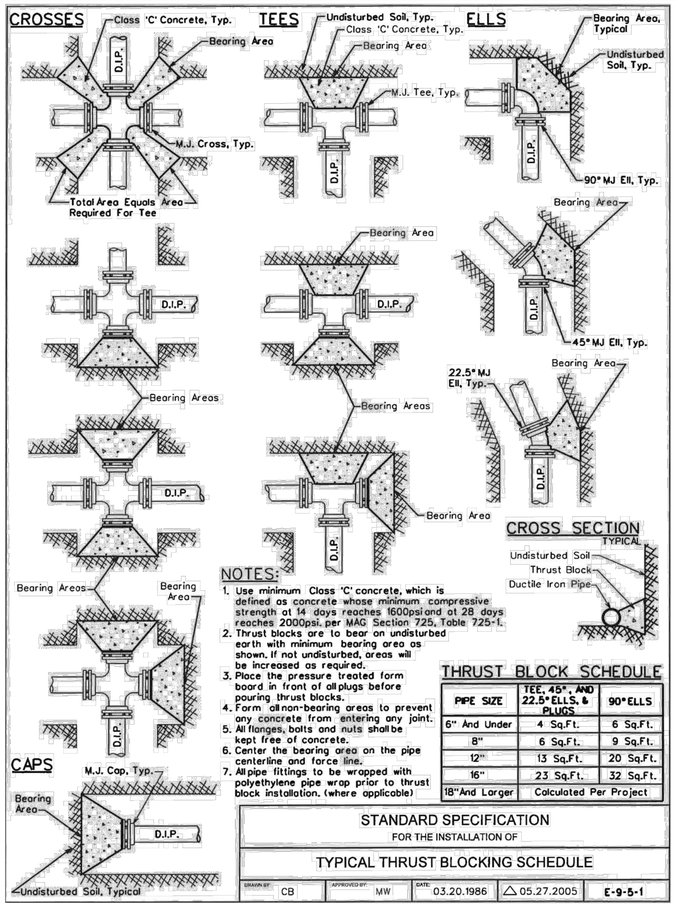

NOTES:

1. Use minimum Class 'C' concrete, which is defined as concrete whose minimum compressive strength at 14 days reaches 1600psi and at 28 days reaches 2000psi. per MAG Section 725, Table 725-1.
2. Thrust blocks are to bear on undisturbed earth with minimum bearing area as shown. If not undisturbed, areas will be increased as required.
3. Place the pressure treated form board in front of all plugs before pouring thrust blocks.
4. Form all non-bearing areas to prevent any concrete from entering any joint.
5. All flanges, bolts and nuts shall be kept free of concrete.
6. Center the bearing area on the pipe centerline and force line.
7. All pipe fittings to be wrapped with polyethylene pipe wrap prior to thrust block installation. (where applicable)

CROSS SECTION

TYPICAL

THRUST BLOCK SCHEDULE

PIPE SIZE	TEE, 45°, AND 22.5° ELLS. & PLUGS	90° ELLS
6" And Under	4 Sq.Ft.	6 Sq.Ft.
8"	6 Sq.Ft.	9 Sq.Ft.
12"	13 Sq.Ft.	20 Sq.Ft.
16"	23 Sq.Ft.	32 Sq.Ft.
18" And Larger	Calculated Per Project	

STANDARD SPECIFICATION
FOR THE INSTALLATION OF

TYPICAL THRUST BLOCKING SCHEDULE

DRAWN BY:	APPROVED BY:	DATE:	△	
CB	MW	03.20.1986	05.27.2005	E-9-5-1

NOTES

1. Bars In Conc. Thrust Block To Be Coated w/ 2 Coats Coal Tar Epoxy or by Other Approved Method.
2. Bars To Have 90° Hook @ Their Ends, As Per Table Below.

Pipe Size	Min. Bar Size	"A" Dimension (Hook)	* Min. Block Dimension (WxHxL)
6"	#6	6"	3'x3'x3'
8"	#6	9"	4'x3'x4'
12"	#8	9"	5'x4'x5'
16"	#9	12"	7'x6'x7'

* For 125 P.S.I. Working Pressure

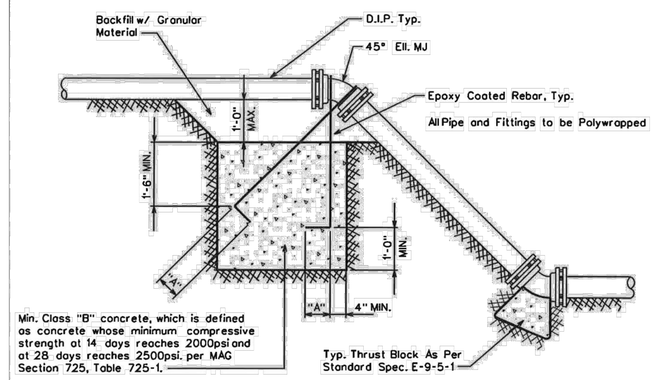

ARIZONA WATER COMPANY

STANDARD SPECIFICATION
FOR THE INSTALLATION OF

THRUST BLOCK FOR VERTICAL BENDS

DRAWN BY:	APPROVED BY:	DATE:	△	
JPK	MJW	7-5-96	01.16.2007	E-9-5-2

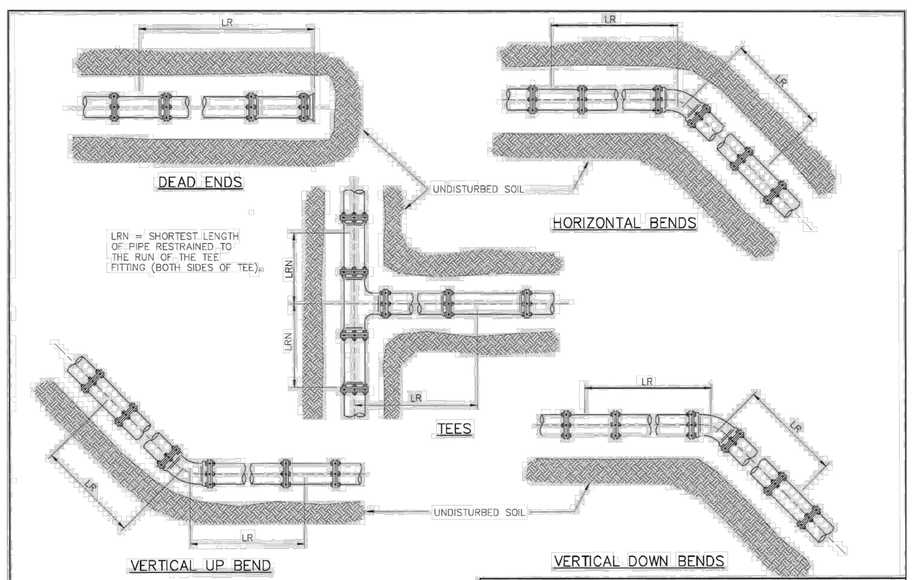

ARIZONA WATER COMPANY

STANDARD SPECIFICATION
FOR THE INSTALLATION OF

JOINT RESTRAINT FOR NEW DUCTILE IRON AND C-900 PVC MAINS

DRAWN BY:	APPROVED BY:	DATE:	△	
CB	MW	01.16.2007		E-9-5-3-1

RESTRAINED LENGTHS, LR, FOR DUCTILE IRON PIPE

NOMINAL PIPE SIZE INCHES	HORIZONTAL BENDS			TEES		VERTICAL OFFSETS						DEAD ENDS
						90° BEND FITTINGS		45° BEND FITTINGS		22-1/2° BEND FITTINGS		
	90°	45°	22-1/2°	LRN=0'	LRN=10'	DOWN BEND	UP BEND	DOWN BEND	UP BEND	DOWN BEND	UP BEND	
4	18	7	4	30	8	31	18	13	7	6	3	31
6	25	10	5	43	20	44	25	18	10	9	5	44
8	32	13	6	56	34	58	32	24	13	11	6	58
10	38	16	8	68	45	69	38	29	16	14	8	69
12	45	19	9	80	57	81	45	34	19	16	9	81
14	51	21	10	91	68	92	51	38	21	18	10	92
16	57	24	11	103	79	104	57	43	24	21	11	104
18	62	26	12	113	90	115	62	48	26	23	12	115
20	68	28	14	125	100	126	68	52	28	25	14	126
24	79	33	16	145	121	147	79	61	33	29	16	147

RESTRAINED LENGTHS, LR, FOR DUCTILE IRON PIPE WITH POLYETHYLENE WRAP

NOMINAL PIPE SIZE INCHES	HORIZONTAL BENDS			TEES		VERTICAL OFFSETS						DEAD ENDS
						90° BEND FITTINGS		45° BEND FITTINGS		22-1/2° BEND FITTINGS		
	90°	45°	22-1/2°	LRN=0'	LRN=10'	DOWN BEND	UP BEND	DOWN BEND	UP BEND	DOWN BEND	UP BEND	
4	26	11	5	69	18	72	26	30	11	14	5	72
6	36	15	7	99	47	102	36	42	15	20	7	102
8	47	19	9	130	78	133	47	55	19	26	9	133
10	56	23	11	157	103	159	56	66	23	32	11	159
12	65	27	13	185	131	187	65	77	27	37	13	187
14	74	31	15	211	156	214	74	89	31	42	15	214
16	82	34	16	238	183	241	82	100	34	48	16	241
18	90	37	18	263	207	266	90	110	38	53	18	266
20	98	41	20	289	233	292	98	121	41	58	20	292
24	113	47	22	337	280	340	113	141	47	68	22	340

NOTES:

1. ALL JOINTS WITHIN THE SPECIFIED LENGTH LR MUST BE RESTRAINED. ALL LENGTHS ARE GIVEN IN FEET.
2. THE MAXIMUM TEST PRESSURE SHALL NOT EXCEED 200 PSI
3. THE MINIMUM DEPTH OF BURY SHALL BE 3' TO TOP OF PIPE.
4. RESTRAINED LENGTHS MAY BE REDUCED WHEN SUPPORTED BY ENGINEERING CALCULATIONS.

ARIZONA WATER COMPANY

STANDARD SPECIFICATION
FOR THE INSTALLATION OF

JOINT RESTRAINT FOR NEW DUCTILE IRON AND C-900 PVC MAINS

DRAWN BY:	APPROVED BY:	DATE:	△	
CB	MW	01.16.2007		E-9-5-3-2

REVISIONS:

NO	DATE	BY	DESCRIPTION
A	10/3/25	FT	30% SUBMITTAL
B	12/12/25	FT	60% SUBMITTAL
C	03/03/26	FT	90% SUBMITTAL

The installation shown is to be installed in accordance with the Arizona Water Company standard specifications on file with the Arizona Department of Environmental Quality

Revised as-builts are NOT at least one foot, vertical and horizontal, from as-built locations

W.A. No.:
P.E. No.:
SYSTEM:
LEGAL DESC.:
TAX DIST.:
SBB No.:
DATE: 03/03/2026
SCALE: AS SHOWN
DRAWN BY: JLC
REVIEWED BY: SDC
CHECKED BY: FHT

ARIZONA WATER COMPANY
3805 N. BLACK CANYON HWY. POST OFFICE BOX 29006
PHOENIX, ARIZONA 85038-9006
(602) 240-6860

PROJECT DESC: STANFIELD GWS&T USBR GRANT COORDINATION
PROJECT SHEET DESC: CIVIL DETAILS - 2

consor

DWG. No.: C-502

Drawing Path and Name: C:\Users\jgoddard\DC\ACCDocs\Consor\Stanfield GWS&T USBR Grant Coordination\Project Files\1-Design\02-CIVIL\2-SHEETS\W242167AZ.00_C-501_502.dwg, Plotted Date: March 9, 2026 12:49 PM By: Joshua Goddard

GENERAL STRUCTURAL NOTES

1.01 GENERAL
- A. THE STRUCTURAL DRAWINGS SHOW THE COMPLETED PROJECT. THEY DO NOT INCLUDE COMPONENTS THAT MAY BE NECESSARY FOR CONSTRUCTION SAFETY. THE CONTRACTOR IS RESPONSIBLE FOR SAFETY IN AND AROUND THE JOB SITE DURING CONSTRUCTION.
- B. GENERAL NOTES, SECTIONS AND TYPICAL DETAILS APPLY EVEN THOUGH NOT SPECIFICALLY REFERENCED ON STRUCTURAL DRAWINGS.

1.02 COORDINATION
- A. VERIFY ALL SITE DIMENSIONS, ELEVATIONS, AND SLOPES WITH CIVIL DRAWINGS. STRUCTURAL DIMENSIONS CONTROLLED BY OR RELATED TO MECHANICAL OR ELECTRICAL EQUIPMENT SHALL BE VERIFIED BY THE CONTRACTOR PRIOR TO CONSTRUCTION.
- B. ENGINEERING DESIGN PROVIDED BY OTHERS AND SUBMITTED FOR REVIEW SHALL BEAR THE SEAL AND SIGNATURE OF AN INSURED PROFESSIONAL STRUCTURAL OR CIVIL ENGINEER REGISTERED IN THE STATE IN WHICH THE SUBMITTED ITEMS WILL BE INSTALLED WHO IS A RECOGNIZED EXPERT IN THE TYPE OF WORK SHOWN AND SPECIFIED.
- C. ANY CHANGES PROPOSED BY THE CONTRACTOR TO THE DESIGN OF THE STRUCTURE DURING CONSTRUCTION SHALL BE SUBMITTED FOR REVIEW TO THE STRUCTURAL ENGINEER. THE CONTRACTOR SHALL BE RESPONSIBLE FOR THE COORDINATION OF STRUCTURAL AND NON-STRUCTURAL ELEMENTS AFFECTED BY PROPOSED CHANGES. THE COST OF DESIGN EFFORT NECESSITATED BY PROPOSED CHANGES SHALL BE BORNE BY THE CONTRACTOR.
- D. THE COST OF DESIGN EFFORT RESULTING FROM ERRORS OR OMISSIONS IN CONSTRUCTION SHALL BE BORNE BY THE CONTRACTOR.
- E. IN CASE OF CONFLICTS, THE MORE COSTLY REQUIREMENTS GOVERN. SUBMIT CLARIFICATION REQUEST PRIOR TO PROCEEDING WITH WORK.
- F. VERIFY NEW AND EXISTING DIMENSIONS AND CONDITIONS PRIOR TO STARTING WORK. NOTIFY THE ENGINEER OF ANY DISCREPANCIES OR INCONSISTENCIES.

2.01 FIELD EXECUTION
- A. STRUCTURES HAVE BEEN DESIGNED FOR OPERATIONAL LOADS ON THE COMPLETED STRUCTURES. THE CONTRACTOR SHALL PROVIDE TEMPORARY BRACING, SHORING, GUYING AND OTHER MEANS TO AVOID EXCESSIVE STRESSES AND HOLD STRUCTURAL ELEMENTS IN PLACE DURING CONSTRUCTION.
- B. CONTRACTOR SHALL EXERCISE EXTREME CARE TO AVOID DAMAGE TO EXISTING STRUCTURES. CONTRACTOR IS RESPONSIBLE FOR ALL MEANS AND METHODS REQUIRED TO FACILITATE CONSTRUCTION OF THE WORK AND FOR ENSURING THE SAFETY, STABILITY AND INTEGRITY OF ADJACENT STRUCTURES AND FACILITIES.
- C. WHEN ANCHORING, SHOOTING, DRILLING, CHIPPING OR CORING INTO CONCRETE, THE AREA SHALL BE SCANNED USING GROUND PENETRATING RADAR (GPR) PRIOR TO START OF WORK. DO NOT CUT OR NICK EXISTING REINFORCING.

STRUCTURAL DESIGN PARAMETERS

1.01 GENERAL
- A. CONSTRUCTION SHALL COMPLY WITH THE BUILDING CODE AND OTHER APPLICABLE CODES AND STANDARDS.
- B. BUILDING CODE: INTERNATIONAL BUILDING CODE (IBC 2018) AS ADOPTED AND AMENDED BY PINAL COUNTY.
- C. STANDARD FOR WELDED STEEL TANKS: AWWA D100 (LATEST EDITION).

2.01 DESIGN CRITERIA
- A. REFERENCE STANDARDS: MINIMUM DESIGN LOADS AND ASSOCIATED CRITERIA FOR BUILDINGS AND OTHER STRUCTURES, ASCE 7-16.
- B. SUPERIMPOSED DEAD LOADS
  1. CANOPY ROOF FRAMING = 10 PSF
- C. LIVE LOADS
  1. ROOF LIVE LOAD = 20 PSF, REDUCIBLE
  2. FLOOR LIVE LOADS:
     a. SLAB ON GRADE UNIFORM DISTRIBUTED LOAD = 300 PSF
- D. WIND LOAD PARAMETERS
  1. EXPOSURE CATEGORY = C
  2. STRUCTURAL RISK CATEGORY = IV
  3. BASIC WIND SPEED = 113 MPH
  4. ALLOWABLE STRESS DESIGN WIND SPEED VASD = 88 MPH
  5. INTERNAL PRESSURE COEFFICIENT: GC(pi) = +0.18, -0.18
- E. SEISMIC LOAD PARAMETERS
  1. STRUCTURAL RISK CATEGORY = IV
  2. SITE CLASS D
  3. SEISMIC DESIGN CATEGORY = B
  4. S(DS) = 0.178g
  5. S(D1) = 0.105g
  6. S(1) = 0.066g
  7. S(s) = 0.167g
  8. I(e)= 1.5
  9. I(p) = 1.5
  10. RESPONSE MODIFICATION FACTOR: R = 3
  11. CANOPY BSFR-SYSTEM = STEEL SYSTEMS NOT SPECIFICALLY DETAILED FOR SEISMIC RESISTANCE, EXCLUDING CANTILEVER COLUMN SYSTEMS
  12. ANALYSIS PROCEDURE USED: EQUIVALENT LATERAL FORCE PROCEDURE

SUBMITTALS

1.01 GENERAL
- A. THE STRUCTURAL ENGINEER WILL REVIEW SUBMITTALS FOR COMPLIANCE WITH THE GENERAL DESIGN INTENT OF THE STRUCTURE AND REQUIREMENTS OF THE CONTRACT DOCUMENTS.
- B. IF A SUBMITTAL CONTAINS VARIATIONS FROM THE CONTRACT DRAWINGS, NOTIFY THE STRUCTUAL ENGINEER IN WRITING DESCRIBING THE EXTENT AND REASON FOR THE VARIATION, AND CLEARLY IDENTIFY ALL ITEMS INVOLVED.
- C. RE-SUBMITTED SHEETS SHALL CLEARLY IDENTIFY ADDED OR CORRECTED INFORMATION AND THE ITEMS INVOLVED BY CLOUDING AROUND ADDED OR CHANGED INFORMATION.
- D. BEFORE SUBMITTING TO THE ENGINEER FOR REVIEW, THE CONTRACTOR SHALL REVIEW, APPROVE, AND SO STAMP EACH SUBMISSION FOR CONFORMANCE WITH MEANS, METHODS, TECHNIQUES, SEQUENCES, AND OPERATIONS OF CONSTRUCTION, AND WITH SAFETY PRECAUTIONS AND PROGRAMS INCIDENTAL THERETO, ALL OF WHICH ARE THE SOLE RESPONSIBILITY OF THE CONTRACTOR.
- E. IT IS THE CONTRACTOR'S RESPONSIBILITY TO CHECK SHOP DRAWINGS, AND COORDINATE SUBMITTAL INFORMATION AND CONTRACT INTERFACES PRIOR TO SUBMITTING FOR REVIEW.
- F. SUBMITTALS WILL BE RETURNED WITHOUT REVIEW IF CURSORY EXAMINATION REVEALS MAJOR ERRORS WHICH SHOULD HAVE BEEN FOUND BY THE CONTRACTOR'S CHECKING. MATERIAL NOT CALLED FOR OR WHICH HAS NOT BEEN APPROVED BY THE CONTRACTOR AND BEAR THEIR STAMP WILL BE RETURNED WITHOUT REVIEW.
- G. WORK DONE PRIOR TO OR WITHOUT SUBMITTAL REVIEW AND APPROVAL BY THE ENGINEER IS PERFORMED AT THE CONTRACTOR'S OWN RISK AND RESPONSIBILITY.
- H. ENGINEERING SUBMITTED FOR REVIEW SHALL BE APPROPRIATELY SEALED. FULL RESPONSIBILITY FOR SUCH ENGINEERING RESTS WITH THE PERSON SEALING THE DESIGN.

DEFERRED SUBMITTALS

1.01 GENERAL
- A. DEFERRED SUBMITTALS ARE THOSE PORTIONS OF THE DESIGN THAT ARE NOT SUBMITTED AT THE TIME OF PERMIT APPLICATION BUT WILL BE SUBMITTED TO THE BUILDING OFFICIAL WITHIN A SPECIFIC TIME. DEFERRAL OF ANY SUBMITTAL ITEMS IS SUBJECT TO APPROVAL BY THE BUILDING OFFICIAL.
- B. THE CONTRACTOR SHALL INCLUDE IN THEIR COST ALL TIME AND EFFORT REQUIRED TO OBTAIN A BUILDING DEPARTMENT REVIEW AND SHALL ALSO INCLUDE ALL TIME AND EFFORT TO SECURE CALCULATIONS AND DRAWINGS APPROPRIATELY SEALED BY AN ENGINEER FOR DEFERRED ITEMS REQUIRING DESIGN.
- C. DOCUMENTS FOR DEFERRED SUBMITTALS SHALL BE SUBMITTED TO THE STRUCTURAL ENGINEER FOR REVIEW PRIOR TO BEING FORWARDED TO THE BUILDING OFFICIAL. THE ENGINEER WILL REVIEW THE SUBMITTAL DOCUMENTS FOR GENERAL CONFORMANCE WITH THE DESIGN INTENT FOR THE STRUCTURE.
- D. SUBMITTALS OF ENGINEERING DESIGN PROVIDED BY OTHERS SHALL HAVE DRAWINGS AND CALCULATIONS APPROPRIATELY SIGNED AND SEALED BY A PROFESSIONAL STRUCTURAL ENGINEER REGISTERED IN THE STATE OF ARIZONA IN WHICH THE SUBMITTED ITEMS WILL BE INSTALLED.
- E. STRUCTURAL COMPONENTS SHALL BE DESIGNED AND MANUFACTURED BY A FABRICATOR APPROVED BY THE GOVERNING AUTHORITY HAVING JURISDICTION.
- F. SUBMITTALS SHALL INCLUDE KEY PLANS, SECTIONS, AND DETAILS NECESSARY FOR CONSTRUCTION.
- G. THE FOLLOWING ITEMS ARE DEFERRED SUBMITTAL ITEMS.
  1. STEEL TANKS AND TANK ANCHORAGE
  2. EQUIPMENT ANCHORAGE

2.01 FIELD EXECUTION
- A. FIELD INSTALLATION OF DEFERRED STRUCTURAL ITEMS IS SUBJECT TO SPECIAL STRUCTURAL INSPECTION.
- B. SHOP FABRICATION OF DEFERRED STRUCTURAL ITEMS MAY ALSO BE SUBJECT TO SPECIAL STRUCTURAL INSPECTION, UNLESS NOTED OTHERWISE.

SPECIAL INSPECTION

1.01 GENERAL
- A. THE OWNER OR THE REGISTERED DESIGN PROFESSIONAL ACTING AS THE OWNER'S AGENT SHALL EMPLOY ONE OR MORE SPECIAL STRUCTURAL INSPECTORS IN ACCORDANCE WITH THE APPLICABLE BUILDING CODE.

1.02 CONTRACTOR AND STRUCTURAL INSPECTOR RESPONSIBILITIES
- A. IT IS THE CONTRACTOR'S RESPONSIBILITY TO SELF-INSPECT THE STRUCTURAL WORK FOR CONFORMANCE WITH THE CONTRACT DOCUMENTS. PRIOR TO REQUESTING ANY SPECIAL INSPECTION, STRUCTURAL INSPECTION PROVIDED BY OTHERS DOES NOT RELIEVE THE CONTRACTOR OF THIS RESPONSIBILITY. STRUCTURAL DEVIATIONS FROM THE CONTRACT DOCUMENTS THAT ARE FOUND AT A LATER DATE AND ARE DECLARED TO BE SIGNIFICANT BY THE STRUCTURAL ENGINEER OF RECORD SHALL BE CORRECTED BY THE CONTRACTOR WITH ALL DISPATCH.
- B. THE STRUCTURAL INSPECTOR IS NOT AUTHORIZED TO STOP OR DELAY THE WORK. IF THE CONTRACTOR ELECTS TO CONTINUE WITH CERTAIN WORK AFTER BEING NOTIFIED BY THE STRUCTURAL INSPECTOR THAT SUCH WORK IS UNACCEPTABLE, THE CONTRACTOR DOES SO AT THEIR OWN RESPONSIBILITY AND RISKS CORRECTING THE WORK AT A LESS OPPORTUNE TIME.
- C. THE CONTRACTOR IS RESPONSIBLE FOR PROVIDING ADEQUATE FACILITIES FOR THE STRUCTURAL INSPECTOR TO INSPECT THE WORK SAFELY AND EFFICIENTLY. TWENTY-FOUR (24) HOUR NOTICE IS REQUIRED PRIOR TO INSPECTION.
- D. WORK TO BE INSPECTED MUST BE COMPLETED PRIOR TO TIME OF INSPECTION. CONTRACTOR SHALL BEAR THE EXPENSE OF ADDITIONAL INSPECTIONS THAT MAY OCCUR BECAUSE OF INCOMPLETE OR INCORRECT WORK.
- E. INSPECTION OF WORK PROVIDED BY THE CONTRACTOR SUCH AS TEMPORARY SHORING OR JACKING SYSTEMS SHALL BE PROVIDED BY THE CONTRACTOR'S DESIGN ENGINEER FOR THOSE SYSTEMS. THE CONTRACTOR/ENGINEER SHALL PROVIDE A LETTER/REPORT TO BOTH THE OWNER AND ENGINEER OF RECORD THAT THESE INSPECTIONS HAVE BEEN COMPLETED BEFORE EACH PHASE OF SUCH WORK CAN PROCEED.
- F. THE STRUCTURAL INSPECTOR IS NOT RESPONSIBLE FOR OSHA COMPLIANCE OR FOR TEMPORARY CONSTRUCTION, SUCH AS BRACING.
- G. THE STRUCTURAL INSPECTOR IS NOT AUTHORIZED TO DIRECT OR APPROVE CHANGES FROM THE CONTRACT DOCUMENTS. IF THE CONTRACTOR WISHES TO QUESTION THE STRUCTURAL INSPECTOR'S INTERPRETATION OF THE CONTRACT DOCUMENTS, THEY MAY DO SO DIRECTLY WITH THE STRUCTURAL ENGINEER OF RECORD.

2.01 SHOP FABRICATIONS
- A. SHOP FABRICATION WORK IS SUBJECT TO SPECIAL STRUCTURAL INSPECTION UNLESS THE FABRICATOR IS REGISTERED AND APPROVED BY THE BUILDING OFFICIAL TO PERFORM WORK WITHOUT SPECIAL INSPECTION.
- B. FABRICATOR SHALL SUBMIT CERTIFICATE OF COMPLIANCE STATING WORK PERFORMED IS IN ACCORDANCE WITH APPROVED CONSTRUCTION DOCUMENTS.

3.01 NOTES APPLICABLE FOR SPECIAL INSPECTION TABLES BELOW
- A. "PERIODIC" SPECIAL INSPECTION: THE PART-TIME OR INTERMITTENT OBSERVATION OF WORK REQUIRING SPECIAL INSPECTION BY AN APPROVED SPECIAL INSPECTOR WHO IS PRESENT IN THE AREA WHERE THE WORK HAS BEEN OR IS BEING PERFORMED AND AT THE COMPLETION OF WORK. 2018 IBC 1702.1.
- B. "CONTINUOUS" SPECIAL INSPECTION: THE FULL-TIME OBSERVATION OF WORK REQUIRING SPECIAL INSPECTION BY AN APPROVED SPECIAL INSPECTOR WHO IS PRESENT IN THE AREA WHERE THE WORK IS BEING PERFORMED. 2018 IBC 1702.1
- C. ITEMS NOT SHOWN MAY REQUIRE CONTINUOUS OR PERIODIC SPECIAL STRUCTURAL INSPECTION AT THE DISCRETION OF THE ENGINEER OF RECORD. ITEMS LISTED MAY REQUIRE ALTERNATE FREQUENCIES OF INSPECTION OTHER THAN SHOWN, UNDER THE DIRECTION OF THE ENGINEER OF RECORD.
- D. VERIFY SOILS INSPECTION REQUIREMENTS WITH PROJECT SOILS ENGINEER/CONSULTANT AS OUTLINED IN SOILS REPORT AND PROJECT SPECIFICATIONS.
- E. "OBSERVED" IN STEEL CONSTRUCTION SPECIAL INSPECTION: THE INSPECTOR SHALL OBSERVE THESE ITEMS ON A RANDOM BASIS. OPERATIONS NEED NOT BE DELAYED PENDING THESE INSPECTIONS
- F. "PERFORM" IN STEEL CONSTRUCTION SPECIAL INSPECTION: THESE TASKS SHALL BE PERFORMED FOR EACH BOLTED CONNECTION AND WELDED JOINT OR MEMBER.

3.02 REQUIRED VERIFICATION AND SPECIAL INSPECTIONS

REQUIRED SPECIAL INSPECTIONS AND TESTS OF SOILS (IBC 2018, TABLE 1705.6)

TYPE AND FREQUENCY OF INSPECTION

1. VERIFY MATERIALS BELOW SHALLOW FOUNDATIONS ARE ADEQUATE TO ACHIEVE THE DESIGN BEARING CAPACITY.
   CONTINUOUS ___ PERIODIC √
2. VERIFY EXCAVATIONS ARE EXTENDED TO PROPER DEPTH AND HAVE REACHED PROPER MATERIAL.
   CONTINUOUS ___ PERIODIC √
3. PERFORM CLASSIFICATION AND TESTING OF COMPACTED FILL MATERIALS.
   CONTINUOUS ___ PERIODIC √
4. VERIFY USE OF PROPER MATERIALS, DENSITIES, AND LIFT THICKNESSES DURING PLACEMENT AND COMPACTION OF COMPACTED FILL.
   CONTINUOUS √ PERIODIC ___
5. PRIOR TO PLACEMENT OF COMPACTED FILL, INSPECT SUBGRADE AND VERIFY THAT SITE HAS BEEN PREPARED PROPERLY.
   CONTINUOUS ___ PERIODIC √

INSPECTION OF CONCRETE CONSTRUCTION (RE: 2018 IBC 1705.3)

TYPE AND FREQUENCY OF INSPECTION

1. INSPECT REINFORCEMENT AND VERIFY PLACEMENT.
   CONTINUOUS ___ PERIODIC √
2. INSPECT ANCHORS CAST IN CONCRETE.
   CONTINUOUS ___ PERIODIC √
3. INSPECT ANCHORS POST-INSTALLED IN HARDENED CONCRETE MEMBERS.
   a. ADHESIVE ANCHORS INSTALLED IN HORIZONTALLY OR UPWARDLY INCLINED ORIENTATIONS TO RESIST SUSTAINED TENSION LOADS.
   CONTINUOUS √ PERIODIC ___
   b. MECHANICAL ANCHORS AND ADHESIVE ANCHORS NOT DEFINED IN 4.a.
   CONTINUOUS ___ PERIODIC √
4. VERIFY USE OF REQUIRED DESIGN MIX.
   CONTINUOUS ___ PERIODIC √
5. PRIOR TO CONCRETE PLACEMENT, FABRICATE SPECIMENS FOR STRENGTH TESTS, PERFORM SLUMP AND AIR CONTENT TESTS, AND DETERMINE THE TEMPERATURE OF THE CONCRETE.
   CONTINUOUS √ PERIODIC ___
6. INSPECT CONCRETE PLACEMENT FOR PROPER APPLICATION TECHNIQUES.
   CONTINUOUS √ PERIODIC ___
7. VERIFY MAINTENANCE OF SPECIFIED CURING TEMPERATURE AND TECHNIQUES.
   CONTINUOUS ___ PERIODIC √
8. VERIFY IN SITU CONCRETE STRENGTH PRIOR TO REMOVAL OF SHORES AND FORMS FROM BEAMS AND STRUCTURAL SLABS.
   CONTINUOUS ___ PERIODIC √
9. INSPECT FORMWORK FOR SHAPE, LOCATION AND DIMENSIONS OF THE CONCRETE MEMBER BEING FORMED.
   CONTINUOUS ___ PERIODIC √

INSPECTION OF STEEL BOLTING (RE: AISC360-16 TABLES N5.6-1, N5.6-2, & N5.6-3)

INSPECTION TASKS PRIOR TO BOLTING

1. THE FOLLOWING TASKS SHALL BE **OBSERVED**.
   - A. FASTENERS MARKED IN ACCORDANCE WITH ASTM REQUIREMENTS.
   - B. CORRECT FASTENERS SELECTED FOR THE JOINT DETAIL (GRADE,TYPE, BOLT LENGTH IF THREADS ARE TO BE EXCLUDED FROM SHEAR PLANE).
   - C. CORRECT BOLTING PROCEDURE SELECTED FOR JOINT DETAIL.
   - D. CONNECTING ELEMENTS, INCLUDING THE APPROPRIATE FAYING SURFACE CONDITION AND HOLE PREPARATION, IF SPECIFIED, MEET APPLICABLE REQUIREMENTS.
   - E. PRE-INSTALLATION VERIFICATION TESTING BY INSTALLATION PERSONNEL OBSERVED AND DOCUMENTED FOR FASTENER ASSEMBLIES AND METHODS USED.
   - F. PROTECTED STORAGE PROVIDED FOR BOLTS, NUTS, WASHERS AND OTHER FASTENER COMPONENTS.
2. THE FOLLOWING TASKS SHALL BE **PERFORMED**.
   - A. MANUFACTURER'S CERTIFICATIONS AVAILABLE FOR FASTENER MATERIALS.

INSPECTION TASKS DURING BOLTING

1. THE FOLLOWING TASKS SHALL BE **OBSERVED**.
   - A. FASTENER ASSEMBLIES PLACED IN ALL HOLES AND WASHERS AND NUTS ARE POSITIONED AS REQUIRED.
   - B. JOINT BROUGHT TO THE SNUG-TIGHT CONDITION PRIOR TO THE PRETENSIONING OPERATION.
   - C. FASTENER COMPONENT NOT TURNED BY THE WRENCH PREVENTED FROM ROTATING.
   - D. FASTENERS ARE PRETENSIONED IN ACCORDANCE WITH THE RCSC SPECIFICATION, PROGRESSING SYSTEMATICALLY FROM THE MOST RIGID POINT TOWARDS THE FREE EDGES.
2. THE FOLLOWING TASKS SHALL BE **PERFORMED**.
   - A. (N/A)

INSPECTION TASKS AFTER BOLTING

1. THE FOLLOWING TASKS SHALL BE **OBSERVED**.
   - A. (N/A)
2. THE FOLLOWING TASKS SHALL BE **PERFORMED**.
   - A. DOCUMENT ACCEPTANCE OR REJECTION OF BOLTED CONNECTIONS.

GFT consor
3838 Central Avenue • Suite 1900
Phoenix • AZ • 85012
t 602 • 553 • 8817

REVISIONS:

NO	DATE	BY	DESCRIPTION

The installation shown is to be installed in accordance with the Arizona Water Company standard specifications on file with the Arizona Department of Environmental Quality

Call 811 at Blue Stakes 811.com

W.A. No.: X-XXXX | P.E. No.: XXXX
SYSTEM: XXXX
LEGAL DESC.: XX 1/4 SEC. XX, T. XX X., R. XX X.
TAX DIST.: XXXX | SBI No.: XX-XX
DATE: 03/09/2026 | SCALE: AS SHOWN
DRAWN BY: MWK | REVIEWED BY: SMT | CHECKED BY: ACK

ARIZONA WATER COMPANY
3805 N. BLACK CANYON HWY. POST OFFICE BOX 29006
PHOENIX, ARIZONA 85038-9006
(602) 240-6860

PROJECT DESC.: STANFIELD GWS&T USBR GRANT COORDINATION
PROJECT SHEET DESC.: **GENERAL STRUCTURAL NOTES 1**

DWG NO.: S-001
OF 17

90% SUBMITTAL

INSPECTION OF STEEL WELDING (RE: AISC360-16 TABLES N5.4-1, N5.4-2, & N5.4-3)

INSPECTION TASKS PRIOR TO WELDING

1. THE FOLLOWING TASK(S) SHALL BE **OBSERVED**.
   A. WELDER QUALIFICATION RECORDS AND CONTINUITY RECORDS.
   B. MATERIAL IDENTIFICATION (TYPE/GRADE).
   C. WELDER IDENTIFICATION SYSTEM.
   D. FIT-UP OF GROOVE WELDS (INCLUDING JOINT GEOMETRY, JOINT PREPARATIONS, DIMENSIONS, CLEANLINESS, TACKING, AND BACKING).
   E. FIT-UP OF CJP GROOVE WELDS AT HSS T-, Y- AND K- JOINTS WITHOUT BACKING (INCLUDING JOINT GEOMETRY, JOINT PREPARATIONS, DIMENSIONS, CLEANLINESS, AND TACKING).
   F. CONFIGURATION AND FINISH OF ACCESS HOLES.
   G. FIT-UP OF FILLET WELDS (INCLUDING DIMENSIONS, CLEANLINESS, AND TACKING).

2. THE FOLLOWING TASKS SHALL BE **PERFORMED**.
   A. WPS AVAILABLE.
   B. MANUFACTURER CERTIFICATIONS FOR WELDING CONSUMABLES AVAILABLE.

INSPECTION TASKS DURING WELDING

1. THE FOLLOWING TASK(S) SHALL BE **OBSERVED**.
   A. CONTROL AND HANDLING OF WELDING CONSUMABLES (INCLUDING PACKAGING AND EXPOSURE CONTROL).
   B. NO WELDING OVER CRACKED TACK WELDS.
   C. ENVIRONMENTAL CONDITIONS (INCLUDING WIND SPEED WITHIN LIMITS, PRECIPITATION, AND TEMPERATURE).
   D. WPS FOLLOWED (INCLUDING SETTINGS ON WELDING EQUIPMENT, TRAVEL SPEED, SELECTED WELDING MATERIALS, SHIELDING GAS TYPE/FLOW RATE, PREHEAT APPLIED, INTERPASS TEMPERATURE MAINTAINED (MIN/MAX), AND PROPER POSITION (F, V, H, OH)).
   E. WELDER IDENTIFICATION SYSTEM (INCLUDING INTERPASS AND FINAL CLEANING, EACH PASS WITHIN PROFILE LIMITATIONS, AND EACH PASS MEETS QUALITY REQUIREMENTS).

2. THE FOLLOWING TASK(S) SHALL BE **PERFORMED**.
   A. PLACEMENT AND INSTALLATION OF STEEL HEADED STUD ANCHORS.

INSPECTION TASKS AFTER WELDING

1. THE FOLLOWING TASK(S) SHALL BE **OBSERVED**.
   A. WELDS CLEANED.
   B. NO PROHIBITED WELDS HAVE BEEN ADDED WITHOUT THE APPROVAL OF THE EOR.

2. THE FOLLOWING TASK(S) SHALL BE **PERFORMED**.
   A. SIZE, LENGTH, AND LOCATION OF WELDS.
   B. WELDS MEET VISUAL ACCEPTANCE CRITERIA (INCLUDING CRACK PROHIBITION, WELD/BASE-METAL FUSION, CRATER CROSS SECTION, CRACK PROHIBITION, WELD PROFILES, WELD SIZE, UNDERCUT, AND POROSITY).
   C. ARC STRIKES.
   D. K-AREA.
   E. WELD ACCESS HOLES IN ROLLED HEAVY SHAPES AND BUILT-UP HEAVY SHAPES.
   F. BACKING REMOVED AND WELD TABS REMOVED (IF REQUIRED).
   G. REPAIR ACTIVITIES.
   H. DOCUMENT ACCEPTANCE OR REJECTION OF WELDED JOINT OR MEMBER.

INSPECTION OF COLD-FORMED STEEL DECK (RE: SDI QA/QC REQUIREMENTS)

INSPECTION ITEM AND FREQUENCY OF INSPECTION

1. MATERIAL VERIFICATION OF COLD-FORMED STEEL DECK
   a. IDENTIFICATION MARKINGS TO CONFORM TO ASTM STANDARDS SPECIFIED IN THE APPROVED CONSTRUCTION DOCUMENTS.
      CONTINUOUS ___ PERIODIC _√_

   b. MANUFACTURER'S CERTIFIED TEST REPORTS.
      CONTINUOUS ___ PERIODIC _√_

2. INSPECTION OF WELDING COLD FORMED STEEL DECK
   a. ROOF DECK WELDS.
      CONTINUOUS ___ PERIODIC _√_

INSPECTION OF POST-INSTALLED ANCHORS AND DOWELS (RE: PRODUCT ICC-ES EVALUATION REPORT)

INSPECTION ITEM AND FREQUENCY OF INSPECTION

1. ADHESIVE ANCHORS AND REINFORCEMENT DOWELS
   - THE FOLLOWING TASKS SHALL BE PERFORMED **CONTINUOUSLY**.
     A. VERIFY DRILL BIT TYPE AND SIZE.
     B. HOLE DEPTH AND CLEANING PROCEDURE.
     C. PRODUCT DESCRIPTION INCLUDING NAME, ROD TYPE, DIAMETER, AND LENGTH.
     D. ADHESIVE EXPIRATION DATE.
     E. PROPER INSTALLATION TECHNIQUE FOR ADHESIVE ANCHORS.

2. MECHANICAL ANCHORS
   - THE FOLLOWING TASKS SHALL BE PERFORMED **CONTINUOUSLY**.
     A. VERIFY DRILL BIT TYPE AND SIZE.
     B. HOLE DEPTH AND CLEANING PROCEDURE.
     C. PRODUCT DESCRIPTION INCLUDING NAME, ANCHOR TYPE, DIAMETER, AND LENGTH.
     D. PROPER INSTALLATION TECHNIQUE FOR MECHANICAL ANCHORS AND TIGHTENING TORQUE.

FOUNDATIONS

1.01 GENERAL
   A. PERFORM WORK IN ACCORDANCE WITH THE GEOTECHNICAL REPORT BY NINYO AND MOORE, DATED 6/13/2025 (NINYO AND MOORE PROJECT NO. 608956001).
   B. FOUNDATION DESIGN IS BASED ON THE FOLLOWING SOIL PROPERTIES.
      1. SOIL CLASSIFICATION = CLASS D
      2. VERTICAL (GRAVITY) NET BEARING PRESSURE = 1500 PSF AT 2'-0" FT BELOW NATURAL GRADE BEARING ON ENGINEERED FILL
      3. FOR MAT FOUNDATIONS MORE THAN FIVE FEET IN WIDTH THE AVERAGE BEARING PRESSURE SHOULD NOT EXCEED AN ALLOWABLE EQUIVALENT UNIFORM BEARING PRESSURE OF 3000 PSF.
      4. LATERAL AT-REST PRESSURES = 60 PSF/FT
      5. LATERAL ACTIVE PRESSURES = 45 PSF/FT
      6. LATERAL PASSIVE PRESSURES = 200 PSF/FT
      7. BASE FRICTION COEFFICIENT = 0.30
   C. PROVIDE CONCRETE ENCASEMENT FOR ALL UNDERGROUND PIPES BENEATH BUILDING FOUNDATIONS.
   D. FOR SHORING REQUIRED TO PROTECT EXISTING STRUCTURES, CONTRACTOR SHALL SUBMIT SHORING SHOP DRAWINGS AND CALCULATIONS TO THE ENGINEER FOR REVIEW. SHOP DRAWINGS AND CALCULATIONS SHALL BEAR THE SEAL OF A GEOTECHNICAL ENGINEER REGISTERED IN THE STATE IN WHICH CONSTRUCTION WILL BE DONE.

2.01 CONTROLLED LOW STRENGTH MATERIAL (CLSM)
   A. CLSM SHALL BE USED AS AN UNREINFORCED FILL MATERIAL TO REPLACE EXCAVATED SOIL UNDER STRUCTURE FOUNDATIONS AND AS SHOWN ON DRAWINGS.
   B. PROPORTIONS: CEMENT CONTENT = 94 LBS/CU YD (+/- 5%); SLUMP = 7 INCHES (+/- 1 INCH); COMPRESSIVE STRENGTH AT 28 DAYS= 150 PSI (+/-50 PSI).

3.01 PLACEMENT
   A. PLACE FOUNDATION CONCRETE ONLY ON CLEAN, FIRM ENGINEERED FILL AT LEAST 1'-6" BELOW THE LOWEST ADJACENT FINISH OR NATURAL GRADE, WHICHEVER IS LOWER. VERIFY THE SUITABILITY OF THE BEARING MATERIAL WITH THE GEOTECHNICAL ENGINEER BEFORE PLACING FOUNDATIONS.
   B. PLACE DOWELS AND ANCHORS BEFORE PLACING CONCRETE. USE TEMPLATES TO ENSURE PROPER PLACEMENT.
   C. CENTER FOUNDATIONS UNDER COLUMNS AND WALLS UNLESS NOTED OTHERWISE. GROUT ALL COLUMN BASE PLATES BEFORE INSTALLING FRAMING ABOVE.

CONCRETE

1.01 DESCRIPTION
   A. THIS SECTION INCLUDES THE REQUIREMENTS FOR MATERIALS, PROPORTIONING, AND INSTALLATION OF CONCRETE (RE: ACI 301-**14**, ACI 318-14, ACI 350-06). PROVIDE NORMAL WEIGHT CONCRETE (144PCF WET) .

1.02 COORDINATION
   A. INSTALL JOINTS, WATERSTOPS, AND SEALANTS IN CONCRETE WHERE APPLICABLE IN ACCORDANCE WITH OTHER SECTIONS OF THE GENERAL STRUCTURAL NOTES, PLANS, AND PROJECT SPECIFICATIONS.
   B. PATCHING OF CONCRETE SHALL BE CONSIDERED STRUCTURAL. CONTACT THE STRUCTURAL ENGINEER FOR PATCHING REPAIR PROCEDURES ON A CASE BY CASE BASIS.
   C. MECHANICAL AND ELECTRICAL SUPPORTS, ANCHORAGES, OPENINGS, RECESSES AND REVEALS NOT SHOWN ON THE STRUCTURAL DRAWINGS BUT REQUIRED BY OTHER CONTRACT DRAWINGS SHALL BE PROVIDED PRIOR TO PLACING CONCRETE.

1.03 SUBMITTALS
   A. SUBMIT THE FOLLOWING TO THE ENGINEER FOR REVIEW PRIOR TO PLACEMENT OF CONCRETE. INDICATE FOR EACH MIX DESIGN THE LOCATION ON THE PROJECT WHERE IT WILL BE USED. PREPARE OR CERTIFY SUBMITTALS TO CONFORM TO ACI CODES BY AN INDEPENDENT TESTING LABORATORY PRIOR TO SUBMITTING TO ENGINEER.
      1. CONCRETE MIX PROPORTIONS AND CHARACTERISTICS.
      2. COMPRESSIVE STRENGTH TESTING DATA.
      3. MATERIAL DATA FOR CEMENTITIOUS MATERIALS, AGGREGATES, ADMIXTURES, AND WATER AND ICE.
      4. JOINT LOCATIONS IF DIFFERENT THAN SHOWN ON DRAWINGS.

1.04 QUALITY ASSURANCE
   A. PRODUCE AND DELIVER CONCRETE IN ACCORDANCE WITH THE STANDARD SPECIFICATIONS IN ACI 301 AND TOLERANCES OF ACI 117. PLACE CONCRETE IN ACCORDANCE WITH ACI 304. CONDUCT HOT WEATHER AND COLD WEATHER CONCRETING IN ACCORDANCE WITH ACI 305 AND ACI 306 RESPECTIVELY.

2.01 MIX WATER
   A. USE POTABLE WATER FREE FROM MATERIALS THAT ARE DELETERIOUS TO CONCRETE OR STEEL (ASTM C1602).

2.02 CEMENTITIOUS MATERIALS
   A. PORTLAND CEMENT: CONFORM TO ASTM C 150, TYPE II, EXCEPT FOR MASS CONCRETE PROVIDE TYPE IV CEMENT OR ADDITIVES OR OTHER PROVISIONS TO REDUCE THE HEAT OF HYDRATION.
   B. FLY ASH: ACCEPTABLE FOR USE IN MIX DESIGN IF COMPLIANT WITH REQUIREMENTS OF CONTRACT DOCUMENTS AND THE MAX RATIO OF FLY ASH TO TOTAL CEMENT AND FLY ASH DOES NOT EXCEED 20 PERCENT BY WEIGHT. CONFORM TO ASTM C 618, TYPE F. DO NOT USE FLY ASH IN COLORED CONCRETE WITHOUT WRITTEN APPROVAL.

2.03 AGGREGATE
   A. PROVIDE A SINGLE SIZE OR A GRADATION OF AGGREGATE WITH THE MAXIMUM SIZE AS SHOWN ON THE MIX DESIGN PROPORTIONS BELOW. DO NOT USE AGGREGATES CONTAINING SOLUBLE SALTS OR OTHER SUBSTANCES SUCH AS IRON SULFIDES, PYRITE, MARCASITE, OCHRE, OR OTHER MATERIALS THAT MAY CAUSE STAINS ON EXPOSED CONCRETE SURFACES.
   B. UNLESS NOTED OTHERWISE, AGGREGATE SHALL BE NORMAL WEIGHT CONFORMING TO ASTM C33.

2.04 ADMIXTURES
   A. SUBMIT ADMIXTURES TO THE ENGINEER FOR REVIEW. DO NOT USE ADMIXTURES CONTAINING CALCIUM CHLORIDE. ADMIXTURES AND COMBINATIONS OF ADMIXTURES SHALL BE THE SAME AS THOSE USED IN THE FIELD OR TRIAL TEST DATA SUBMITTED.
   B. SUPERPLASTICIZERS (HIGH RANGE WATER REDUCERS) AND WATER REDUCERS: COMPLY WITH ASTM C494 TYPE A AND TYPE F. FOR PLANT-ADDED SUPERPLASTICIZERS, BATCHES ARRIVING ON SITE WITH A SLUMP OF 5" OR LESS WILL NOT BE ACCEPTED. FOR SITE-ADDED SUPERPLASTICIZERS, THE MIX SHALL BE SLUMPED AT THE JOB SITE PRIOR TO THE ADDITION OF SUPERPLASTICIZERS. PROVIDE COMPUTER BATCH RECORDS IF SUPERPLASTICIZERS ARE USED. DO NOT ADD ADDITIONAL SUPERPLASTICIZERS ON SITE.

2.05 SLUMP
   A. TOLERANCE FOR SPECIFIED SLUMP IS +/- 1 INCH BEFORE THE ADDITION OF SUPERPLASTICIZERS/WATER REDUCERS PER ACI 117. MAXIMUM SLUMP WITH SUPERPLASTICIZERS IS 8 INCHES. WATER MAY BE ADDED ON SITE FOR SLUMP ADJUSTMENT IF THE TOTAL AMOUNT ADDED IS WITHIN THE WATER/CEMENTITIOUS RATIO AND SLUMP LIMITS SPECIFIED. DO NOT ADD WATER IF SUPERPLASTICIZERS ARE USED.

2.06 MIX DESIGN PROPORTIONS (NORMAL WT CONCRETE U.N.O.)

   A. PROVIDE COMPUTERIZED BATCH RECORDS WITH ALL LOAD LOCATION.

LOCATION	MIN 28 DAY COMPRESSIVE STRENGTH (PSI)	MAX W/CM RATIO	SLUMP (IN)	% AIR	MAX AGGREGATE SIZE (IN)
STRUCTURAL CONCRETE	4000	0.42	4	1.5	1"
PIPE ENCASMENT CONCRETE	3000	0.50	4	4.5	1

2.07 NON-SHRINK GROUT
   A. USE PLASTIC OR STIFF (DRY PACK), NON-METALLIC, NON-SHRINK GROUT WITH MINIMUM 7,000 PSI COMPRESSIVE STRENGTH AT 28 DAYS. CONFORM TO THE REQUIREMENTS OF CRD-C 621 CORPS OF ENGINEERS FOR NON-SHRINK GROUT.
   B. SATURATE THE AREA WITH POTABLE WATER FOR 24 HOURS IMMEDIATELY PRIOR TO APPLICATION OF THE GROUT PER THE MANUFACTURER'S RECOMMENDATIONS. WET CURE AND APPLY CURING COMPOUNDS TO EXPOSED GROUT SURFACES.
   C. USE BASF CONSTRUCTION GROUT, EUCO DRY PACK GROUT, OR EQUAL.

2.08 NON-SHRINK EPOXY GROUT
   A. USE POURABLE, NON-SHRINK, 100% SOLIDS FORMULA WITH MINIMUM 5000 PSI COMPRESSIVE STRENGTH AT 24 HOURS.
   B. ROUGHEN CONCRETE SURFACE AND EXPOSE AGGREGATE. APPLY TO CLEAN, DRY SURFACE PER MANUFACTURER'S RECOMMENDATIONS.
   C. USE BASF MASTERFLOW 648 CP, EUCO E3-F OR EQUAL.

3.01 CONCRETE PLACING
   A. DO NOT PLACE CONCRETE IN CONTACT WITH ALUMINUM.
   B. DO NOT ADD WATER ON SITE OR AFTER SUPERPLASTICIZERS HAVE BEEN ADDED.
   C. THE MAXIMUM FREE DROP OF CONCRETE IS 6'-0" WITHOUT A TREMIE PIPE TO PREVENT SEGREGATION. DEPOSIT CONCRETE AS NEAR AS POSSIBLE TO ITS FINAL POSITION. DO NOT EMPLOY ANY PRACTICES CAUSING SEGREGATION SUCH AS VIBRATING CONCRETE TO SPEED CONVEYANCE.
   D. MECHANICALLY VIBRATE CONCRETE, EXCEPT SLABS ON GRADE NEED BE VIBRATED ONLY AROUND UNDER-FLOOR DUCTS AND OTHER ITEMS EMBEDDED IN THE SLAB. REVIBRATE TOPS OF COLUMNS, CAISSONS (DRILLED PIERS), AND THE TOP 5 FEET OF WALLS (OVER 10 FEET IN HEIGHT).
   E. WAIT 28 DAYS MINIMUM AFTER CONCRETE HAS BEEN PLACED BEFORE SAND BLASTING, WATER BLASTING OR OTHER SURFACE TREATMENT.
   F. DO NOT PLACE CONCRETE IN STANDING WATER.

3.02 FINISHING
   A. PROVIDE FINISHES ON FORMED SURFACES PER ACI 301 AND FORMED SURFACE IRREGULARITIES PER ACI 117 AS FOLLOWS.
      1. ROUGH FORM FINISH: SURFACES NOT EXPOSED TO PUBLIC VIEW. PATCH TIE HOLES, LEAVE TEXTURE IMPARTED BY FORM, REMOVE FINS GREATER THAN 1/2 INCH IN HEIGHT.
      2. SMOOTH FORM FINISH: SURFACES EXPOSED TO PUBLIC VIEW. REMOVE FINS GREATER THAN 1/8 INCH IN HEIGHT.
      3. SURFACES EXPOSED TO VIEW: CLASS B SURFACE WITH ABRUPT IRREGULARITIES LESS THAN 1/4 INCH.
   B. THE USE OF WATER OR "SPRINKLING" AS AN AID TO FINISHING UNFORMED SURFACES IS PROHIBITED.
   C. PROVIDE 3/4" X 3/4" CHAMFERS AT ALL EXPOSED CORNERS OF SLABS, WALLS, COLUMNS AND BEAMS.

3.03 CURING
   A. CURE CONCRETE PER ACI 318 AND ACI 301 FOR 7 DAYS AFTER PLACEMENT. CURING COMPOUNDS SHALL HAVE A FUGITIVE DYE. CURING COMPOUNDS SHALL BE COMPATIBLE WITH FUTURE TOPPINGS, PAINT, WATERPROOFING AND FINISHES. APPLY TWO HEAVY COATS OF CURING COMPOUND USING A HIGH PRESSURE AIRLESS SPRAYER. APPLY THE SECOND COAT 90 DEGREES TO THE FIRST. CLEAN NOZZLES AFTER EACH USE.
   B. CONCRETE SURFACES IN CONTACT WITH POTABLE WATER OR WATER UNDER TREATMENT TO BECOME POTABLE SHALL BE CONTINUOUSLY MOIST CURED UNLESS ANSI/NSF-61 CERTIFIED CURING COMPOUND IS USED.
   C. OTHER CONCRETE SURFACES CURING COMPOUND SHALL MEET THE MOISTURE RETENTION REQUIREMENTS OF ASTM C-309, TYPE 1-D AT COVERAGE RATE SPECIFIED, AND PASS VOC REQUIREMENTS.
   D. COLUMNS, WALLS, GRADE BEAMS, AND FOUNDATIONS: START CURING IMMEDIATELY UPON THE REMOVAL OF FORMS AND THE COMPLETION OF FINISHING WORK. THE TOPS OF SPREAD FOUNDATIONS REQUIRE CURING COMPOUND.
   E. SLAB AND CAST-IN-PLACE FINISHED CONCRETE: START CURING IMMEDIATELY AFTER THE CONCRETE HAS SET ENOUGH TO WALK ON WITHOUT HARMING THE FINISH.

REINFORCING STEEL

1.01 DESCRIPTION
   A. THIS SECTION INCLUDES REQUIREMENTS FOR MATERIALS, DETAILING, AND INSTALLATION OF REINFORCING STEEL (RE: ACI 301-14, ACI 318-14, ACI 350-06).
   B. PLACE REINFORCEMENT IN CONFORMANCE WITH CONTRACT DRAWINGS AND ACI DETAILING MANUAL SP-66.

1.02 COORDINATION
   A. DO NOT DAMAGE OR DISRUPT REINFORCING BARS, STEEL EMBEDS, OR CONNECTORS FROM THEIR PROPER LOCATION BY THE PLACEMENT OF EMBEDDED PIPING OR CONDUIT. PROVIDE REQUIRED CLEARANCE BETWEEN REINFORCEMENT AND EMBEDDED PIPING AND CONDUIT.

1.03 SUBMITTALS
   A. SUBMIT PLACING DRAWINGS PER ACI DETAILING MANUAL, ACI SP-66, FOR ENGINEER'S REVIEW. INCLUDE ELEVATIONS SHOWING REINFORCING AT CONCRETE FOUNDATIONS, WALLS AND BEAMS.

1.04 QUALITY ASSURANCE
   A. TOLERANCES FOR FABRICATION, PLACEMENT, BAR BENDS, STANDARD HOOKS AND LAP SPLICES FOR REINFORCEMENT SHALL CONFORM TO ACI 117, SECTION 2 AND CRSI STANDARDS.

2.01 REINFORCEMENT MATERIALS
   A. REINFORCING STEEL SHALL BE DEFORMED.
   B. REINFORCING STEEL SHALL CONFORM TO THE FOLLOWING STANDARDS.
      1. ALL REINFORCING STEEL- ASTM A 615, GRADE 60

3.01 PLACEMENT
   A. SECURELY TIE REINFORCING AND EMBEDDED ITEMS IN POSITION BEFORE PLACING CONCRETE OR GROUT. DO NOT STAB OR SHOVE INTO FRESHLY PLACED CONCRETE.
   B. BAR SUPPORTS AND SPACERS SHALL BE PROVIDED IN ACCORDANCE WITH ACI 301 REINFORCING SHOWN ON THE DRAWINGS SHALL NOT BE BURIED ABOVE OR BELOW ITS REQUIRED POSITION AND LAYER. ADDITIONAL BARS MAY BE USED AS BURIED BAR SUPPORTS, BUT ONLY IF THEY ARE IN CONFORMANCE WITH CONCRETE COVER REQUIREMENTS.

3.02 COVER
   A. CONCRETE COVER FOR REINFORCING BARS (TO FACE OF BAR INCLUDING PRIMARY REINFORCEMENT, STIRRUPS, TIES, AND SPIRALS) UNLESS NOTED OTHERWISE ON DRAWINGS.
   B. CAST-IN-PLACE CONCRETE ACI 350 (NON-PRESTRESSED)
      1. CONCRETE CAST AGAINST AND PERMANENTLY EXPOSED TO EARTH
         - ALL BARS - 3"
      2. CONCRETE CAST AGAINST FORMS AND PERMANENTLY EXPOSED TO EARTH, LIQUID, WEATHER, OR BEARING ON A WORK MAT
         - ALL REINFORCING STEEL - 2 1/2"
      3. CONCRETE NOT EXPOSED TO EARTH, LIQUID, OR WEATHER
         - ALL REINFORCING STEEL - 2"

3.03 SPLICES
   A. REINFORCEMENT SHALL BE CONTINUOUS WITH FULL TENSION LAPS AND TERMINATED WITH A 90 DEGREE STANDARD HOOK, UNLESS NOTED OTHERWISE.
   B. WALL REINFORCEMENT AT CORNERS, INTERSECTIONS, AND JUNCTIONS SHALL BE CONTINUOUS AND LAPPED OR TERMINATED IN A 90 DEGREESTANDARD HOOK.
   C. RADIAL WALLS SHALL HAVE STAGGERED SPLICES WITH NO MORE THAN 1/3 OF THE REINFORCEMENT SPLICED AT ANY LOCATION.
   D. SPLICE REINFORCING BARS ONLY AT APPROVED LOCATIONS. SPLICE BOTTOM BARS OVER SUPPORTS AND TOP BARS AT MID-SPAN ONLY, UNLESS NOTED OTHERWISE ON DRAWINGS.
   E. DOWEL VERTICAL REINFORCEMENT TO FOUNDATIONS, UNLESS NOTED OTHERWISE ON DRAWINGS. ALL DOWELS SHALL BE THE SAME SIZE AND SPACING AS THE REINFORCEMENT THAT IT IS SPLICED WITH, UNLESS NOTED OTHERWISE ON DRAWINGS.
   F. STAGGER END LAP SPLICES OF WELDED WIRE FABRIC AS REQUIRED FOR MAXIMUM 3 LAYERS OF FABRIC AT ANY LOCATION.
   G. PROVIDE THE SAME MINIMUM FIRE RATED COVER TO MECHANICAL SPLICE COUPLERS AS REQUIRED FOR BOTH PRIMARY AND REGULAR REINFORCEMENT. ADJUST STIRRUPS AND TIES AS NOTED IN SPECIAL DETAILS.
   H. DRAWINGS DO NOT INDICATE ALL REQUIRED BAR SPLICES. SUBMIT SPLICE LAYOUT AS A PART OF REINFORCING BAR SHOP DRAWINGS, INCLUDING SPLICES ADDED TO IMPLEMENT CONTRACTORS MEANS AND METHODS.

3.04 WELDING
   A. DO NOT WELD REINFORCING STEEL.

GFT consor
3838 Central Avenue • Suite 1900
Phoenix • AZ • 85012
t 602 • 553 • 8817

REVISIONS:

NO	DATE	BY	DESCRIPTION

The installation shown is to be installed in accordance with the Arizona Water Company standard specifications on file with the Arizona Department of Environmental Quality

ARIZONA WATER COMPANY
3805 N. BLACK CANYON HWY. POST OFFICE BOX 29006
PHOENIX, ARIZONA 85038-9006
(602) 240-6860

W.A. No.: X-XXXX | P.E. No.: XXXX
SYSTEM: XXXX
LEGAL DESC.: XX 1/4 SEC. XX, T. XX X., R. XX X.
TAX DIST.: XXXX | SBI No.: XX-XX
DATE: 03/09/2026 | SCALE: AS SHOWN
DRAWN BY: MWK | REVIEWED BY: SMT | CHECKED BY: ACK

PROJECT DESC.: STANFIELD GWS&T USBR GRANT COORDINATION
PROJECT SHEET DESC.: **GENERAL STRUCTURAL NOTES 2**

DWG NO.: S-002
OF 17

90% SUBMITTAL

REINFORCING STEEL (CONTINUED)

3.05 LAP SPLICE LENGTHS
- A. TOP BARS ARE HORIZONTAL BARS LOCATED WHERE 12 INCHES OR MORE OF FRESH CONCRETE WILL BE PLACED BELOW THE BAR.
- B. LAP WELDED WIRE FABRIC TWO FULL SQUARES.
- C. LAP SPLICES ARE CLASS 'B' SPLICES, UNLESS NOTED OTHERWISE.
- D. MINIMUM LAP SPLICE AND EMBEDMENT LENGTHS FOR CLASS 'B' LAPS AND FOR BARS WITH CONCRETE COVER OF AT LEAST ONE BAR DIAMETER ARE GIVEN IN THE FOLLOWING SCHEDULE, UNLESS NOTED OTHERWISE. PROVIDE STANDARD HOOK PER ACI STANDARD BAR HOOK EMBEDMENT.

REINFORCEMENT LAP SPLICE AND EMBEDMENT LENGTH (*f'c ≥ 4000 psi*)

BAR SIZE	METRIC BAR SIZE (SOFT)	BAR SPACING CENTER TO CENTER	MIN LAP LENGTH (IN)		MIN EMBEDMENT LENGTH (IN)		
			TOP BARS	OTHER BARS	STRAIGHT BARS		WITH STANDARD HOOK
			CLASS B	CLASS B	TOP BARS	OTHER BARS	
REQUIREMENTS FOR SLABS AND WALLS**							
#3	#10	≥ 3db **	24	19	19	15	7
#4	#13		32	25	25	19	10
#5	#16		40	31	31	24	12
#6	#19		48	37	37	29	15
#7	#22		70	54	54	42	17
#8	#25		80	62	62	48	19

** FOR BAR SPACING LESS THAN 3 BAR DIAMETER, ADD 50% TO LAP AND STRAIGHT EMBEDMENT LENGTHS.

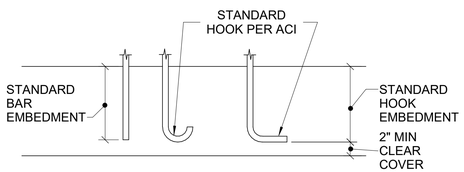

POST-INSTALLED ANCHORS AND DOWELS

1.01 DESCRIPTION
- A. THIS SECTION COVERS THE REQUIREMENTS FOR MATERIALS AND INSTALLATION OF POST-INSTALLED ADHESIVE ANCHORS, DOWELS AND MECHANICAL ANCHORS IN CONCRETE AND MASONRY CONSTRUCTION.
- B. POST INSTALLED ANCHORS AND DOWELS SHALL ONLY BE USED WHERE SPECIFIED ON THE CONSTRUCTION DOCUMENTS. THE CONTRACTOR SHALL OBTAIN WRITTEN APPROVAL FROM THE ENGINEER OF RECORD PRIOR TO INSTALLING ANY STRUCTURAL POST INSTALLED ANCHORS OR DOWELS THAT MAY BE USED TO REPLACE MISSING OR MISPLACED CAST-IN-PLACE ANCHORS OR DOWELS.

1.02 QUALITY ASSURANCE
- A. PROVIDE SPECIAL INSPECTION IN ACCORDANCE WITH THE APPLICABLE ICC-ES REPORT, THE BUILDING CODE, AND THE GENERAL STRUCTURAL NOTES.
- B. INSTALL ALL ADHESIVE ANCHORS, DOWELS AND MECHANICAL ANCHORS PER ADHESIVE MANUFACTURER'S REQUIREMENTS.

1.03 ANCHOR SUBSTITUTION
- A. SUBSTITUTION REQUESTS FOR POST-INSTALLED CONCRETE ANCHORS OTHER THAN THOSE SPECIFIED ON DRAWINGS SHALL BE SUBMITTED BY THE CONTRACTOR TO THE ENGINEER OF RECORD ALONG WITH CALCULATIONS THAT ARE PREPARED AND SEALED BY A REGISTERED PROFESSIONAL ENGINEER. THE CALCULATIONS SHALL DEMONSTRATE THAT THE SUBSTITUTE PRODUCT IS CAPABLE OF ACHIEVING THE PERTINENT EQUIVALENT PERFORMANCE VALUES OF THE SPECIFIED PRODUCT USING THE APPROPRIATE DESIGN PROCEDURE AND OR STANDARDS AS REQUIRED BY THE BUILDING CODE. SUBSTITUTE MECHANICAL ANCHORS SHALL HAVE BEEN TESTED AND QUALIFIED FOR USE IN ACCORDANCE WITH ACI-355.2 AND ICC-ES AC193 FOR CRACKED CONCRETE. SUBSTITUTED ADHESIVE ANCHORS SHALL HAVE BEEN TESTED AND QUALIFIED FOR USE IN ACCORDANCE WITH ACI-355.4 AND ICC-ES AC308 FOR CRACKED CONCRETE.
- B. ENGINEER RESERVE THE RIGHT TO REJECT ALL REQUESTS. DO NOT ORDER MATERIAL UNTIL REQUEST IS APPROVED.

2.01 ANCHORS RODS, BOLTS, AND SLEEVES
- A. SUBMERGED, EXTERIOR, OR BURIED CONDITIONS: PROVIDE ASTM F593 AISI TYPE 316 STAINLESS STEEL ANCHOR BOLTS WITH ASTM F594 STAINLESS STEEL NUTS.
- B. INTERIOR CONDITIONS: PROVIDE ASTM A307 CARBON STEEL ANCHOR RODS (U.N.O.).

2.02 MECHANICAL ANCHORS FOR CONCRETE
- A. KWIK BOLT TZ 2 EXPANSION ANCHOR BY HILTI (ICC-ES REPORT #ESR-4266) (USE STAINLESS STEEL ANCHORS FOR EXTERIOR OR DAMP EXPOSURE) U.N.O.
- B. STRONG-BOLT 2 WEDGE ANCHOR BY SIMPSON (ICC-ES REPORT #ESR-3037) (USE STAINLESS STEEL ANCHORS FOR EXTERIOR OR DAMP EXPOSURE) U.N.O.
- C. OR APPROVED EQUAL.

2.03 ADHESIVES FOR ANCHORS AND DOWELS IN CONCRETE
- A. HIT-RE 500 V3 BY HILTI (ICC-ES REPORT #ESR-3814).
- B. SET-3G BY SIMPSON (ICC-ES REPORT #ESR-4057).
- C. OR APPROVED EQUAL.

3.01 FIELD INSTALLATION
- A. INSTALL ANCHORS ONLY AFTER CONCRETE HAS REACHED ITS MINIMUM SPECIFIED STRENGTH.
- B. LOCATE ANCHORS TO AVOID DAMAGE TO REINFORCEMENT. USE GROUND PENETRATING RADAR (GPR) TO LOCATE THE EXISTING REINFORCING. MARK REINFORCING LOCATIONS ON THE CONCRETE SURFACE. COORDINATE LOCATIONS OF HOLES TO BE DRILLED WITH MARKS TO CLEAR THE EXISTING REINFORCING.
- C. INSTALL ANCHORS IN ACCORDANCE WITH MANUFACTURER'S PUBLISHED INSTALLATION INSTRUCTIONS. SEE SPECIAL INSPECTION REQUIREMENTS AND PRODUCT ICC-ES REPORT FOR INSPECTION REQUIREMENTS.
- D. CLEAN DRILLED HOLES USING WIRE BRUSH AND COMPRESSED AIR AS REQUIRED TO REMOVE PARTICULATE DEBRIS AND TO ACHIEVE A DUST FREE SURFACE.
- E. TORQUE ADHESIVE ANCHORS UPON INSTALLING BASE MATERIAL, BUT ONLY AFTER ADHESIVE IS FULLY CURED AND LOAD TEST HAVE BEEN PERFORMED.

CONSTRUCTION JOINTS

1.01 DESCRIPTION
- A. LOCATION OF ALL CONSTRUCTION JOINTS SHALL BE AS SHOWN ON THE DRAWINGS OR APPROVED BY THE ENGINEER. SUBMIT CONSTRUCTION JOINT LOCATIONS NOT SHOWN ON THE STRUCTURAL DRAWINGS TO THE ENGINEER FOR REVIEW.
- B. UNLESS NOTED OTHERWISE ON DRAWINGS CONSTRUCTION JOINTS FOR CONCRETE GRADE BEAMS, BEAMS AND SLABS SHALL BE IN THE MIDDLE THIRD OF THE SPAN.

1.02 COORDINATION
- A. PROVIDE AND INSTALL POLYVINYLCHLORIDE (PVC) AND HYDROPHILIC VINYLESTER WATERSTOPS WHERE SHOWN ON DRAWINGS AND AT ALL CONSTRUCTION JOINTS IN WATERBEARING, AND PARTIALLY AND FULLY UNDERGROUND SLABS AND WALLS (INCLUDING ELEVATOR AND ESCALATOR PITS, AND CHEMICAL CONTAINMENT AREAS). WATERSTOPS ARE NOT REQUIRED IN WALLS AND SLABS WHEN THERE IS WATER ON BOTH SIDES UNLESS NOTED OTHERWISE.

1.03 SUBMITTALS
- A. SUBMIT THE FOLLOWING PRIOR TO START OF WORK.
  1. LAYOUT OF CONSTRUCTION AND EXPANSION JOINTS.
  2. MANUFACTURER'S PRODUCT SPECIFICATIONS AND INSTALLATION INSTRUCTIONS FOR WATERSTOPS AND JOINT FILLER MATERIAL AND ACCESSORIES.

2.01 MATERIALS
- A. PROVIDE WATERSTOPS AND JOINT SEALANT SUITABLE FOR THEIR CONDITION OF USE SUCH AS MOVEMENT AND/OR CHEMICAL ATTACK, FOR EXAMPLE, WATER CONTAMINATED WITH SOLVENTS AND HYDROCARBONS.
- B. PROVIDE PREFORMED JOINT FILLER IN ACCORDANCE WITH ASTM D 1752 TYPE I (FOAM RUBBER) OR TYPE II (CORK) AT INTERIOR EXPANSION JOINTS AND AS NOTED ON DRAWINGS. PROVIDE PREFORMED BITUMINOUS JOINT FILLER IN ACCORDANCE WITH ASTM D 1751 FOR EXTERIOR ISOLATION JOINTS AND AS NOTED ON DRAWINGS.

3.01 PLACEMENT
- A. ALL CONSTRUCTION JOINTS SHALL BE THOROUGHLY CLEANED FOR BOND. CAULK AND SEAL JOINTS PER JOB SPECIFICATIONS AND WHERE NOTED ON DRAWINGS.
- B. SEE TYPICAL DETAILS FOR INSTALLATION OF CONSTRUCTION JOINTS AND WATERSTOPS IN NEW CONSTRUCTION AND BETWEEN EXISTING AND NEW CONSTRUCTION.
- C. FOR NON-WATERBEARING SLABS-ON-GRADE, PLACE JOINTS IN 12" SLAB ON GRADE AT 20'-0" MAXIMUM OR IN RATIOS NOT TO EXCEED 2:1. TIMING OF JOINT SAWING IS CRITICAL. JOINTS SHOULD BE SAWN AS SOON AS THE CONCRETE IS HARD ENOUGH THAT THE SAWING DOES NOT RAVEL JOINT EDGES OR DISLODGE COURSE AGGREGATE PARTICLES. PROVIDE SAWCUTS IN A RECTANGULAR PATTERN AS SHOWN ON PLANS. WHERE A PATTERN IS NOT SHOWN, SAWCUT ON COLUMN LINES, AT EQUAL SPACES BETWEEN COLUMNS LINES TO PRODUCE THE MAXIMUM SPACING, AND AT ALL RE-ENTRANT CORNERS AND SLAB CHANGES. PROVIDE ISOLATION JOINTS IN A DIAMOND PATTERN AROUND COLUMNS. SUBMIT JOINT LAYOUT PLAN PRIOR TO STARTING WORK.

STRUCTURAL STEEL

1.01 DESCRIPTION
- A. THIS SECTION COVERS THE REQUIREMENTS FOR MATERIALS AND INSTALLATION OF STRUCTURAL STEEL.

1.02 SUBMITTALS
- A. SUBMIT SHOP DRAWINGS FOR ENGINEER'S REVIEW. FABRICATE ONLY FROM REVIEWED DRAWINGS.

1.03 QUALITY ASSURANCE
- A. STEEL CONSTRUCTION SHALL CONFORM TO THE SPECIFICATIONS AND STANDARDS AS CONTAINED IN THE LATEST EDITION OF THE AMERICAN INSTITUTE OF STEEL CONSTRUCTION (AISC) MANUAL, INCLUDING THE COMMENTARY AND SUPPLEMENTS.
- B. ALL STEEL FABRICATION WORK SHALL BE PREFORMED BY A FABRICATOR APPROVED BY THE OWNER.
- C. DO NOT USE "JET" WELDING RODS (E8024) FOR ANY STRUCTURAL WELDING.

1.04 STRUCTURAL STEEL FABRICATOR'S QUALIFICATIONS
- A. STRUCTURAL STEEL FABRICATOR MUST BE ON THE CITY'S PRE-APPROVED LIST OR PARTICIPATE IN THE AISC CERTIFICATION PROGRAM DESCRIBED IN AISC 201, AND BE DESIGNATED AN AISC CERTIFIED PLANT, CATEGORY STANDARD.

2.01 MATERIALS

CATEGORY	ASTM	GRADE, FY (KSI)
PLATES FOR W-SHAPE MEMBERS AND STRUCTURAL TUBES	A572	GR 50
OTHER ROLLED SECTIONS (ANGLES, CHANNELS, PLATES, ETC.)	A36	FY=36
WHERE NOTED "50 KSI" ON DRAWINGS	A572	FY=50
STRUCTURAL TUBES (HSS)	A500	GR C, FY=50
STRUCTURAL BOLTS (U.N.O.) (TYPE N CONNECTION)	F3125	A325
ANCHOR RODS/BOLTS	F1554	GR 36
WELDING RODS (LOW HYDROGEN)	--	E-70XX SERIES

2.02 ANCHOR RODS
- A. PROVIDE HEADED OR THREADED AND NUTTED ANCHOR RODS. HOOKED ANCHOR RODS ARE NOT ACCEPTABLE.
- B. FOR THREADED ANCHOR RODS, PROVIDE A SINGLE HEAVY HEX NUT. TACK WELD THE BOTTOM OF THE NUT TO THE ROD AT THE EMBEDDED END, UNLESS NOTED OTHERWISE. THE TOP OF THE EMBEDDED HEAD OR NUT IS THE BASIS FOR MEASUREMENT OF EMBEDMENT. PROVIDE A RIGID TEMPORARY STEEL TEMPLATE TO LOCATE ANCHOR RODS DURING CONCRETE PLACEMENT.
- C. DO NOT HEAT OR BEND ANCHOR RODS.

3.01 FIELD WELDING
- A. FIELD WELDING, CUTTING AND GRINDING OF STEEL INSIDE THE PUBLIC OCCUPIED BUILDING SHALL NOT BE ALLOWED WITHOUT OWNERS APPROVAL. THE CONTRACTOR SHALL COORDINATE WITH THE OWNER AND THE STEEL ERECTOR THE LOCATIONS, THE TIME OF DAY, SMOKE-FIRE ALARM SYSTEMS CONTROLS AND OTHER FIELD CONDITIONS UNDER WHICH WORK MAY OCCUR INSIDE THE PUBLIC OCCUPIED BUILDING DURING ALL PHASED CONSTRUCTION WORK.
- B. PROVIDE HOT WORK PERMITS. HOT WORK IS ANY WORK INVOLVING WELDING, TORCH CUTTING, GRINDING, OPEN-FLAME SOLDERING, BRAZING OR SIMILAR OPERATIONS CAPABLE OF INITIATING FIRES OR EXPLOSIONS.
- C. WELDING SHALL CONFORM TO THE FOLLOWING AMERICAN WELDING SOCIETY (AWS) STRUCTURAL WELDING CODES AS APPLICABLE.
  1. AWS D1.1 STRUCTURAL WELDING CODE-STEEL. .
- D. WELDERS SHALL HOLD VALID CERTIFICATES ISSUED BY AN ACCEPTED TESTING AGENCY WITHIN THE LAST 12 MONTHS. IF ANY CERTIFICATE IS MORE THAN 12 MONTHS OLD, SUBMIT DETAILS OF COMPANY QUALITY CONTROL.
- E. WELDERS SHALL SUBMIT WELDER QUALIFICATIONS AND WELDING PROCEDURE SPECIFICATIONS (WPS) TO THE ENGINEER FOR REVIEW PRIOR TO THE START OF WORK. QUALIFICATIONS AND WPS SHALL BE AVAILABLE ON SITE FOR REVIEW.
- F. IT IS THE CONTRACTOR'S RESPONSIBILITY TO COORDINATE THE USE OF SHOP AND FIELD WELDS. SPLICES OF STEEL MEMBERS NOT SHOWN ON THE DRAWINGS SHALL BE APPROVED BY THE ENGINEER PRIOR TO THE START OF WORK.
- G. GRIND SMOOTH ALL EXPOSED WELDS AND CUT EDGES. FINAL APPROVAL IS BY THE ARCHITECT.
- H. WELDING SHALL BE BY EITHER THE SHIELDED METAL ARC WELDING (SMAW) METHOD OR SHALL CONFORM TO AWS CODE FOR ARC AND GAS WELDING CONSTRUCTION.
  1. MECHANICAL PROPERTIES FOR THE IN-PLACE WELD (FILLER MATERIAL) SHALL HAVE CHARPY V-NOTCH IMPACT TOUGHNESS OF AT LEAST 20 FOOT-POUNDS AT 0 DEGREES.
  2. FIELD WELDS MAY NOT BE APPLIED OVER SHOP WELDS UNLESS A MANUFACTURER APPROVED COMPATIBLE ELECTRODE IS USED IN BOTH THE SHOP AND FIELD.
  3. CONTRACTOR SHALL BE RESPONSIBLE FOR THE JOINT PREPARATION AND WELDING PROCEDURES, BUT NOT LIMITED TO: REQUIRED ROOT OPENINGS, ROOT FACE DIMENSIONS, GROOVE ANGLES, BACKING BARS, COPES, SURFACE ROUGHNESS VALUES, AND TAPERS AND TRANSITIONS OF UNEQUAL PARTS.
- I. PROVIDE MINIMUM WELD SIZES PER AISC SPECIFICATIONS FOR GENERAL PROVISIONS FOR CONNECTIONS, JOINTS AND FASTENERS UNLESS SHOWN OTHERWISE ON DRAWINGS.
- J. FILLER MATERIAL OF LOW HYDROGEN CLASSIFICATION(S) SHALL BE STORED IN ACCORDANCE WITH AWS REQUIREMENTS AND PARAMETERS. LOW HYDROGEN ELECTRODES SHALL BE USED WITHIN 4 HOURS OF OPENING THEIR THERMETICALLY SEALED CONTAINERS. ELECTRODES THAT HAVE BEEN WET SHALL NOT BE USED AND SHALL BE REMOVED FROM THE SITE.

3.02 BOLTING
- A. MANUFACTURER CERTIFICATIONS OF BOLTING FOR FASTENER COMPONENTS USED IN THE FASTENER ASSEMBLIES SHALL BE MADE AVAILABLE TO THE ENGINEER OF RECORD AND INSPECTOR PRIOR TO ASSEMBLY OR ERECTION OF STRUCTURAL STEEL.
- B. HIGH STRENGTH BOLTS SHALL BE INSTALLED, TIGHTENED AND INSPECTED IN ACCORDANCE WITH THE AISC SPECIFICATIONS FOR STRUCTURAL JOINTS USING ASTM A325 OR A490 BOLTS.
- C. THE USE OF FULL TENSION TORQUE CONTROL BOLT ASSEMBLIES IN SNUG TIGHT BEARING CONNECTIONS SHALL BE APPROVED BY THE ENGINEER PRIOR TO INSTALLATION.
- D. BOLTING SHALL BE TESTED AND REQUIRED VERIFICATIONS PERFORMED IN ACCORDANCE TO AISC SPECIFICATIONS PRIOR TO INSTALLATION.
- E. FASTENER COMPONENTS SHALL BE STORED ON SITE IN ACCORDANCE WITH AISC SPECIFICATIONS.
- F. PROVIDE WASHERS IN ACCORDANCE WITH AISC "SPECIFICATION FOR STRUCTURAL JOINTS USING ASTM A325 OR A490 BOLTS," SECTION 6. PROVIDE PLATE WASHERS WHEN OVERSIZED OR LONG SLOTTED HOLES ARE IN THE OUTER PLY OF A CONNECTION.

METAL DECK

1.01 DESCRIPTION
- A. THIS SECTION DESCRIBES STEEL DECKING AS SHOWN ON THE DRAWINGS. SEE DRAWINGS FOR EXTENT, ORIENTATION, TYPE AND THICKNESS OF DECK REQUIRED.

1.02 SUBMITTALS
- A. SHOP DRAWINGS SHALL SHOW THE ERECTION PROCEDURE AND DETAILS, THE ICC-EVALUATION SERVICE REPORT NUMBER, SECTION PROPERTIES, AND DIAPHRAGM SHEAR FURNISHED AND SHALL BE SUBMITTED FOR REVIEW PRIOR TO FABRICATION.

2.01 TYPE "N" ROOF DECK
- A. ALL SHEETS TO BE 20 GAGE, 3" DEEP, AND 24" WIDE PER ICC-ES REPORT #ESR-1735P OR EQUAL. NARROWER CLOSURE STRIPS SHALL NOT BE LESS THAN 1'-6" WIDE AND SHALL BE FASTENED TO ADJACENT FULL SHEET WITH TYPICAL SIDE SEAM ATTACHMENT.
- B. PROVIDE STEEL DECK CONFORMING TO ASTM A 653, SS GRADE 33 (MIN) WITH GALVANIZED COATING DESIGNATION G60.
- C. MINIMUM DECK PROPERTIES ARE AS FOLLOWS
  1. YIELD STRENGTH, Fy = 50 KSI
  2. POSITIVE BENDING EFFECTIVE SECTION MODULUS (DECK TOP IN COMPR)
     a. +Sx = 0.443 IN^3/FT
  3. NEGATIVE BENDING EFFECTIVE SECTION MODULUS (DECK BOTTOM IN COMPR)
     a. -Sx = 0.531 IN^3/FT
  4. DEFLECTION
     a. Id = 0.907 IN^4/FT
- A. FASTEN TO STRUCTURAL FRAMING WITH HILTI X-EDN19-THQ12 AT
  1. ALL FLUTES AT TRANSVERSE SUPPORTS
  2. ALL STEEL MEMBERS PARALLEL TO FLUTES @ 12"o.c.
  3. TO EACH FLUTE AND AT 6" ON CENTERS AT OPENING EDGES
  4. STANDING SEAM SIDE LAPS 1-1/2" LONG TOP SEAM WELD OR BUTTON PUNCH AT 12" o.c.

2.02 SCREWS
- A. PROVIDE #12-24X1 1/4 HWH #5 SELF-DRILLING TAPPING SCREWS WHERE SCREWS ARE NOTED ON DRAWINGS FOR FASTENING DECK TO MEMBERS OTHER THAN PRIMARY ROOF FRAMING
- B. MANUFACTURES
  1. HILTI KWIK-PRO SELF-DRILLING TAPPING SCREWS
     a. ICC-ES REPORT NO. ESR-2196
  2. ITW BUILDEX TEKS SELF-DRILLING TAPPING SCREWS
     a. ICC-ES REPORT NO. ESR-1976
  3. INSTALL SCREWS AS FOLLOWS
     a. MINIMUM SPACING = 3/4 INCH o.c.
     b. MINIMUM EDGE DISTANCE = 1/2 INCHES

3.01 INSTALLATION
- A. INSTALL ROOF DECK UNITS IN ACCORDANCE WITH THE MANUFACTURER'S RECOMMENDATIONS AND SHOP DRAWINGS.
- B. PLACE UNITS ON STRUCTURAL STEEL FRAMING WITH 2 1/2" MIN BEARING LENGTH, EXCEPT 4 INCH MIN BEARING FOR LONG SPAN METAL DECK UNITS.
- C. PLACE UNITS IN LENGTHS TO SPAN 3 OR MORE SUPPORTS WITH 2 1/2 END LAPS. INTERLOCK SIDE LAPS TO ALLOW FOR SIDE SEAM FASTENING. WHERE SIMPLE SPANS ARE REQUIRED (TO MEET ROOF SLOPES, ETC) USE NEXT HEAVIER GAGE.
- D. INSTALL DECK WITH CORRUGATION EDGES UP.
- E. PROVIDE MINIMUM EDGE DISTANCE AT ENDS OF DECK PER DECK MANUFACTURES REQUIREMENTS FOR TYPE OF FASTENERS BEING USED.

3.02 HANGER ATTACHMENT
- A. ALL OTHER STEEL DECK
  1. PROVIDE SECONDARY SUPPORT FOR LIGHTING, PLUMBING, HVAC, CABLE TRAYS, SIGNAGE, OR SIMILAR ITEMS FROM STRUCTURAL BEAMS, GIRDERS, OR COLUMNS ONLY. DO NOT SUPPORT THESE ITEMS FROM METAL DECK WITHOUT SPECIFIC APPROVAL FROM THE PROGRAM/PROJECT MANAGER.

GFT consor
3838 Central Avenue • Suite 1900
Phoenix • AZ • 85012
t 602 • 553 • 8817

REVISIONS:

NO	DATE	BY	DESCRIPTION

The installation shown is to be installed in accordance with the Arizona Water Company standard specifications on file with the Arizona Department of Environmental Quality

AZ 811 Call 811 or click Arizona811.com

ARIZONA WATER COMPANY
3805 N. BLACK CANYON HWY. POST OFFICE BOX 29006
PHOENIX, ARIZONA 85038-9006
(602) 240-6860

W.A. No.: X-XXXX
SYSTEM:
P.E. No.: XXXX
LEGAL DESC.: XX 1/4 SEC. XX, T. XX X., R. XX X.
TAX DIST.: XXXX
SBI No.: XX-XX
DATE: 03/09/2026
SCALE: AS SHOWN
DRAWN BY: MWK
REVIEWED BY: SMT
CHECKED BY: ACK

PROJECT DESC.: STANFIELD GWS&T USBR GRANT COORDINATION

PROJECT SHEET DESC.: **GENERAL STRUCTURAL NOTES 3**

DWG NO.: S-003

3/9/2026 11:13:02 AM Autodesk Docs://083161_Consor_AZWater_Stanfield_WC/083161_CONSOR_AZWATER_STANFIELD _WC_CENTRAL_S_R24.rvt

90% SUBMITTAL

GRATING

1.01 GENERAL
A. PROVIDE AND INSTALL GRATING SYSTEMS WHERE NOTED ON STRUCTURAL, PROCESS, OR MECHANICAL DRAWINGS COMPLETE WITH COVER PANELS AS NOTED ON DRAWINGS AND ALL NECESSARY ACCESSORIES INCLUDING, BUT NOT LIMITED TO, EMBEDDED EDGE ANGLES, MID-SUPPORT CLIPS, AND ANCHORAGES AT SUPPORTS. PROVIDE REQUIRED SEPARATION (BEARING PADS, ETC.) BETWEEN NON-COMPATIBLE MATERIALS. COORDINATE CUTOUTS AS REQUIRED FOR PIPING AND EQUIPMENT PER MECHANICAL DRAWINGS.

1.02 SUBMITTALS
A. SUBMIT SHOP DRAWINGS AND CALCULATIONS FOR THE GRATING AND THEIR RESPECTIVE ATTACHMENTS TO THE ENGINEER FOR REVIEW. THE DRAWINGS AND CALCULATIONS SUBMITTED FOR REVIEW SHALL BEAR THE SEAL AND SIGNATURE OF A PROFESSIONAL STRUCTURAL/CIVIL ENGINEER REGISTERED IN THE STATE IN WHICH THE SUBMITTED ITEMS WILL BE INSTALLED.

1.03 QUALITY ASSURANCE
A. PROVIDE SIZES, ANCHORING DETAILS, FABRICATION TOLERANCES IN ACCORDANCE WITH THE LATEST EDITION OF NAAMM METAL BAR GRATING MANUAL (ANSI/NAAMM MBG 531).
B. PROVIDE NON-SKID WALKING SURFACE AS FOLLOWS:
BAR GRATING - SERRATED; NON-BAR GRATING - GROOVED; OR PERMANENTLY BONDED SURFACE COATING CONFORMING TO ANSI A326.3. EXTERIOR APPLICATIONS SHALL BE UV RESISTANT.
C. LIMIT THE WEIGHT OF INDIVIDUAL GRATING AND COVER PANEL UNITS DESIGNATED AS REMOVABLE TO 75 POUNDS.
D. USE ANCHORAGE DEVICES AND FASTENERS TO SECURE ALL GRATING TO SUPPORT ELEMENTS OR PREPARED OPENINGS, AS RECOMMENDED BY THE MANUFACTURER.

2.01 STEEL MATERIAL
A. STEEL GRATING SHALL BE GALVANIZED CARBON STEEL BEARING BARS AND CROSS BARS WELDED TOGETHER. CROSS BARS MAY BE ROUND OR TWISTED. PROVIDE LOAD TYPE BANDING (WELD EACH BEARING BAR TO BAND BAR) CONTINUOUS ALONG EDGES AND CUTOUTS.
1. GRATING BEARING BARS, CROSS BARS, AND BAND BARS SHALL CONFORM TO ASTM A1011 COMMERCIAL STEEL, TYPE 2.
2. HOT-DIP GALVANIZE GRATING AFTER FABRICATION IN CONFORMANCE WITH ASTM A123 GRADE 45 (COATING NOT LESS THAN 1.8OZ/SQFT).

2.02 ALUMINUM MATERIAL
A. PROVIDE ALLOY 6061-T6 OR ALLOY 6063-T6 CONFORMING TO ASTM B221. PROVIDE SWAGE-LOCKED CROSS BARS.
B. WHERE ALUMINUM IS IN CONTACT WITH CONCRETE SURFACES, CONTACT SURFACES SHALL BE COATED WITH HEAVY ALKALI-RESISTANT BITUMINOUS PAINT.

2.03 GRATING PERFORMANCE CRITERIA
A. DESIGN FOR THE FOLLOWING MINIMUM LOADING REQUIREMENTS IN ACCORDANCE WITH THE BUILDING CODE. THE FOLLOWING LOADING CONDITIONS NEED NOT BE APPLIED SIMULTANEOUSLY
a. UNIFORMLY DISTRIBUTED LIVE LOAD - 300 PSF (WITH NO LIMIT ON DEFLECTION).
b. CONCENTRATED LIVE LOAD - 3000 LBS ON 2.5FT X 2.5FT AREA (WITH NO LIMIT ON DEFLECTION).
c. MAXIMUM DEFLECTION UNDER UNIFORMLY DISTRIBUTED LIVE LOAD OF 100 PSF OR CONCENTRATED LIVE LOAD OF 1000 LBS ON 1.0FT X 1.0FT AREA: 1/4" MAX OR SPAN/240, WHICHEVER IS LESS.

3.01 FIELD EXECUTION
A. ALL GRATING SHALL BE PERMANENTLY INSTALLED BY FIELD WELDING TO ALL END BEARING AND INTERMEDIATE SUPPORTS UNLESS NOTED OTHERWISE AS REMOVABLE ON DRAWINGS. SECURE REMOVABLE GRATING TO END BEARING AND INTERMEDIATE SUPPORTS USING REMOVABLE DEVICES AND FASTENERS AS RECOMMENDED BY THE MANUFACTURER.

ABBREVIATIONS

AB	ANCHOR BOLT(S)
ACI	AMERICAN CONCRETE INSTITUTE
AISC	AMERICAN INSTITUTE OF STEEL CONSTRUCTION
ASTM	AMERICAN SOCIETY OF TESTING MATERIAL
AWS	AMERICAN WELDING SOCIETY
BLK	BLOCK
BM	BEAM
BOTT	BOTTOM
BRG	BEARING
BTWN	BETWEEN
C/C	CENTER TO CENTER
CIP	CAST IN PLACE
CJ	CONTROL JOINT OR CONSTRUCTION JOINT
CL	CENTERLINE
CLR	CLEAR
COL	COLUMN
CONC	CONCRETE
CONN	CONNECTION
CONSTR	CONSTRUCTION
CONT	CONTINUE OR CONTINUOUS
DEMO	DEMOLITION
DIA	DIAMETER
DIAG	DIAGONAL
DIM	DIMENSION
DL	DEAD LOAD
DN	DOWN
DP	DEEP OR DEPTH
DTL	DETAIL
DWG(S)	DRAWING(S)
DWL(S)	DOWEL(S)
E (PSI)	MODULES OF ELASTICITY
EA	EACH
EF	EACH FACE
EL	ELEVATION
EMBED	EMBEDMENT
EOD	EDGE OF DECK
EOS	EDGE OF SLAB
EQ	EQUAL
EQUIP	EQUIPMENT
ES	EACH SIDE
EW	EACH WAY
FDN	FOUNDATION
FT	FOOT, FEET
FTG	FOOTING
FY	YIELD STRESS OF STEEL
GA	GAGE OR GAUGE
GALV	GALVANIZED
GSN	GENERAL STRUCTURAL NOTES
HAS	HEADED ANCHOR STUD
HDG	HOT DIPPED GALVANIZED
HK	HOOK
HORIZ	HORIZONTAL
HSS	HOLLOW STRUCTURAL SECTION
HT	HEIGHT
I (IN4)	MOMENT OF INERTIA
I.F.	INSIDE FACE
ICC	INTERNATIONAL CODE COUNCIL
IN	INCH
INFO	INFORMATION
INT	INTERIOR
JT	JOINT
K	KIP = 1,000 LBS
LBS	POUNDS
LG	LONG
LL	LIVE LOAD
LLH	LONG LEG HORIZONTAL
LLV	LONG LEG VERTICAL
MAINT	MAINTENANCE
MATL	MATERIAL
MAX	MAXIMUM
MFR	MANUFACTURER
MID	MIDDLE
MIN	MINIMUM
MISC	MISCELLANEOUS
MTL	METAL
NF	NEAR FACE
NO, #	NUMBER
NTS	NOT TO SCALE
o.c.	ON CENTER (LOWERCASE)
OH	OVERHANG
OPP	OPPOSITE
OPP HD	OPPOSITE HAND
PCF	POUNDS PER CUBIC FOOT
PEN	PENETRATION
PERP	PERPENDICULAR
PL	PLATE OR PROPERTY LINE
PLF	POUNDS PER LINEAR FOOT
PRELIM	PRELIMINARY
PROJ	PROJECTION
PSF	POUNDS PER SQUARE FOOT
PSI	POUNDS PER SQUARE INCH
R/W	REINFORCED WITH
REINF	REINFORCED OR REINFORCING
REQ'D	REQUIRED
SHT	SHEET
SIM	SIMILAR
SJI	STEEL JOIST INSTITUTE
SOG	SLAB ON GRADE
SPA	SPACES
SPEC	SPECIFICATION
SQ	SQUARE
STD	STANDARD
STIFF	STIFFENER
STL	STEEL
STRUC	STRUCTURE OR STRUCTURAL
SYMM	SYMMETRICAL
T&B	TOP AND BOTTOM
THK	THICK OR THICKNESS
TOC	TOP OF CONCRETE
TOG	TOP OF GROUT
TOS	TOF OF STEEL
TOW	TOP OF WALL
TYP	TYPICAL
UNO	UNLESS NOTED OTHERWISE
VERT	VERTICAL
w/	WITH (LOWERCASE)
w/o	WITHOUT (LOWERCASE)
WF	WIDE FLANGE
WP	WORK POINT
#	NUMBER
%	PERCENT
&	AND
@	AT

GFT
3838 Central Avenue • Suite 1900
Phoenix • AZ • 85012
t 602 • 553 • 8817
consor

REVISIONS:

NO	DATE	BY	DESCRIPTION

The installation shown is to be installed in accordance with the Arizona Water Company standard specifications on file with the Arizona Department of Environmental Quality

AZ 811 Before Arizona 811 at least two full working days before you start your excavation. Call 811 or click Arizona811.com

W.A. No.: X-XXXX
P.E. No.: XXXX
SYSTEM: XXXX
LEGAL DESC.: XX 1/4 SEC. XX, T. XX X., R. XX X.
TAX DIST.: XXXX
SIB No.: XX-XX
DATE: 03/09/2026
SCALE: AS SHOWN
DRAWN BY: MWK
REVIEWED BY: SMT
CHECKED BY: ACK

ARIZONA WATER COMPANY
3805 N. BLACK CANYON HWY. POST OFFICE BOX 29006
PHOENIX, ARIZONA 85038-9006
(602) 240-6860

PROJECT DESC: STANFIELD GWS&T USBR GRANT COORDINATION

PROJECT SHEET DESC: **GENERAL STRUCTURAL NOTES 4**

DWG NO.: S-004

OF 17

90% SUBMITTAL

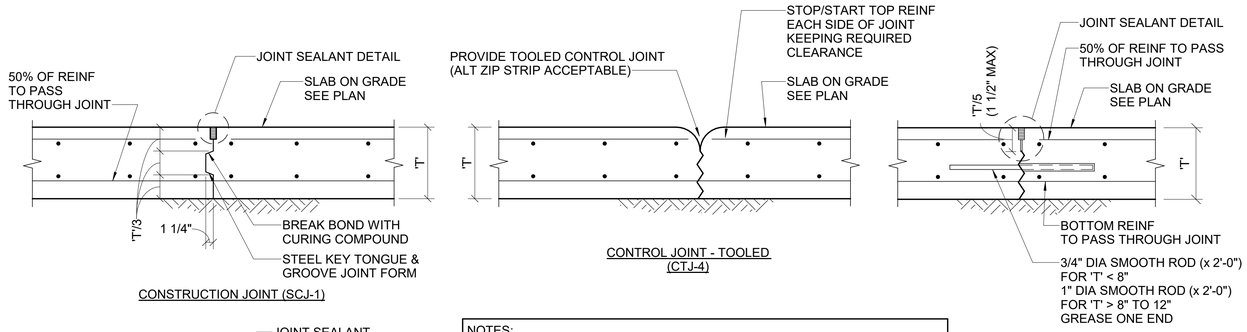

NOTES:
1. CONSTRUCTION JOINT MAY BE SUBSTITUTED FOR SAW JOINT AT CONTRACTOR'S OPTION.
2. IF CONSTRUCTION IS STOPPED BETWEEN INDICATED JOINTS, PROVIDE CONSTRUCTION. JOINT SHOWN WITH #5 x 2'-6" DWLS @ 24" CENTERED IN SLAB AND ON JOINT.
3. CONTROL JOINT SHALL BE PREFORMED OR SAWED. CUT AFTER SUFFICIENT STRENGTH IS ACHIEVED TO PREVENT SPALLING.

TYPICAL SLAB ON GRADE JOINTS

1 DETAIL
SCALE: 1" = 1'-0"

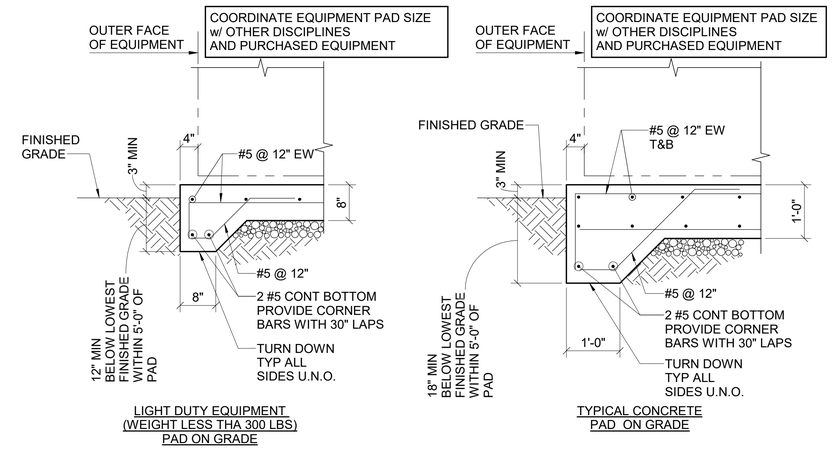

TURNDOWN AT
TYPICAL PAD ON GRADE

2 DETAIL
SCALE: 3/4" = 1'-0"

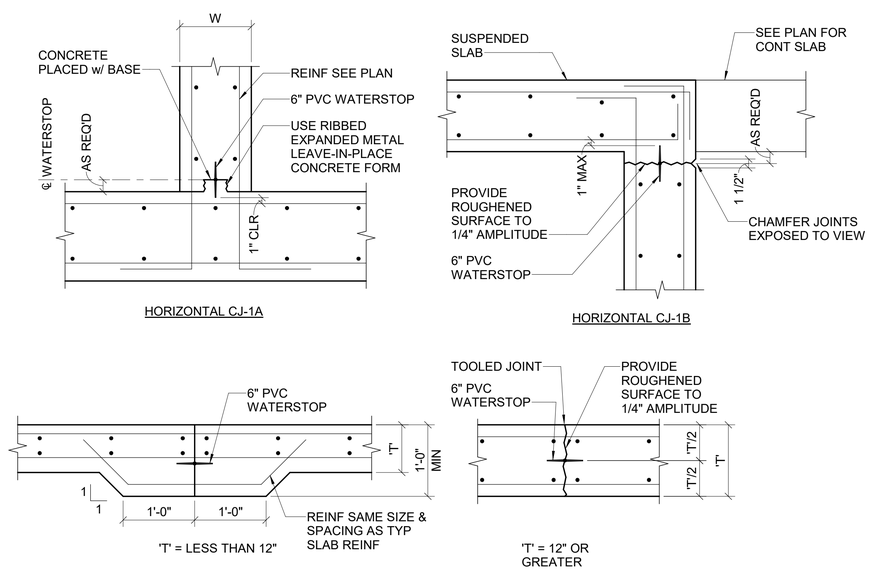

SLAB ON GRADE CJ-3 (w/ WATERSTOP)
SLAB ON GRADE CJ-3A
(w/o WATERSTOP)

NOTES:
1. CONTINUE ALL REINFORCEMENT BARS THRU JOINTS.
2. CONSTRUCTION JOINTS SHALL NOT OCCUR WITHIN THE MINIMUM LENGTH OF LAPS FOR SPLICES OF REINFORCEMENT SEE GENERAL STRUCTURAL NOTES FOR LAP SPLICE REQUIREMENTS.

TYPICAL CONSTRUCTION JOINTS

3 DETAIL
SCALE: 1" = 1'-0"

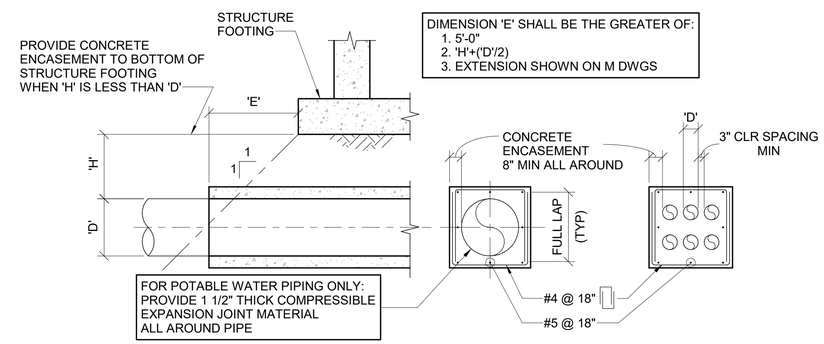

DIMENSION 'E' SHALL BE THE GREATER OF:
1. 5'-0"
2. 'H'+('D'/2)
3. EXTENSION SHOWN ON M DWGS

NOTES:
1. ALL PIPES, CONDUITS, ELECTRICAL LINES ETC. ARE TO BE ENCASED AS FOLLOWS:
   A. ELEMENTS WHICH ENCOMPASS A DIAMETER OF 8" EITHER BY ITSELF OR THE CO-LOCATION OF SMALLER ELEMENTS STACKED IN MULTIPLE LAYERS EQUALING 8" IN DIAMETER
   B. ELEMENTS WHEN THEY ARE LOCATED LESS THAN 2'-0" BELOW BOTTOM OF CONCRETE SLAB, FOUNDATION ETC.
2. THIS REQUIREMENT MUST TAKE INTO ACCOUNT ALL APPLICABLE CODES AND REQUIREMENTS WHERE ENCASEMENT IS NOT ALLOWED BY SAID CODES.
   A. WHERE ENCASEMENT IS NOT PERMITTED, ELEMENTS WHICH ARE REGULATED SHALL BE PLACED AS THE CODE REQUIRES FOR THAT PARTICULAR ITEM OR ITEMS. IN THOSE CASES THE ITEM WHICH MAY NOT BE ENCASED SHALL BE PLACED MORE THAN 2'-0" BELOW THE STRUCTURAL CONCRETE.
3. FOR POTABLE WATER PIPING ONLY PROVIDE 1 1/2" THICK COMPRESSIBLE EXPANSION JOINT MATERIAL ALL AROUND PIPE.

REINFORCED CONCRETE PIPE ENCASEMENT UNDER STRUCTURES

4 DETAIL
SCALE: 1/4" = 1'-0"

GFT consor
3838 Central Avenue • Suite 1900
Phoenix • AZ • 85012
t 602 • 553 • 8817

REVISIONS:			
NO	DATE	BY	DESCRIPTION

The installation shown is to be installed in accordance with the Arizona Water Company standard specifications on file with the Arizona Department of Environmental Quality

Before digging, call at least two full working days in advance to request locations. Call 811 or dial Arizona811.com

W.A. No.: X-XXXX
P.E. No.: XXXX
SYSTEM: XXXX
LEGAL DESC.: XX 1/4 SEC. XX, T. XX X., R. XX X.
TAX DIST.: XXXX
SBI No.: XX-XX
DATE: 03/09/2026
SCALE: AS SHOWN
DRAWN BY: MWK
REVIEWED BY: SMT
CHECKED BY: ACK

ARIZONA WATER COMPANY
3805 N. BLACK CANYON HWY. POST OFFICE BOX 29006
PHOENIX, ARIZONA 85038-9006
(602) 240-6860

PROJECT DESC.: STANFIELD GWS&T USBR GRANT COORDINATION
PROJECT SHEET DESC.: TYPICAL DETAILS 1

DWG NO.: S-005
OF 17

90% SUBMITTAL

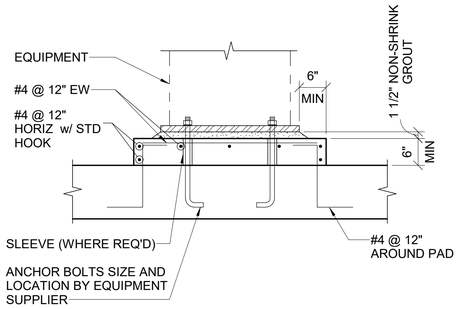

EQUIPMENT SUPPORT PAD DETAIL ON NEW CONSTRUCTION

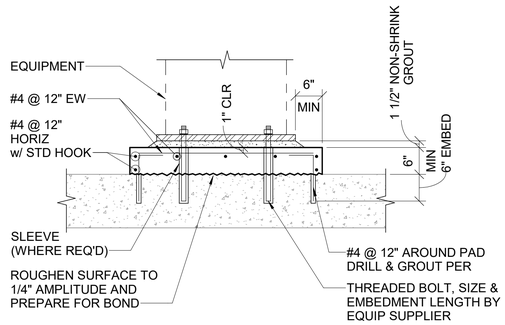

EQUIPMENT SUPPORT PAD w/ DRILLED IN ANCHORS

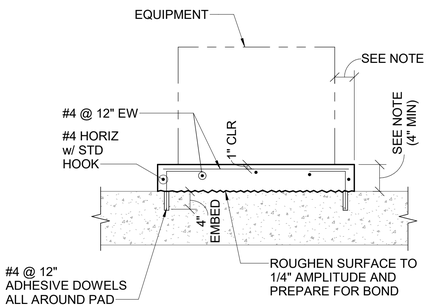

EQUIPMENT PAD w/ DRILLED IN ANCHORS

NOTES:
1. PROVIDE 1 1/2" NON-SHRINK GROUT UNLESS GREATER THICKNESS IS REQUIRED BY THE EQUIPMENT MANUFACTURER. REQUIREMENTS, AND WITH THE BUILDING CODE.
2. DIMENSION EQUIPMENT PADS IN CONFORMANCE WITH THE MECHANICAL DRAWINGS, EQUIPMENT REQUIREMENTS, AND WITH THE BUILDING CODE.
3. PROVIDE CRACK CONTROL JOINTS IN EQUIPMENT PADS AS FOLLOWS.
   A. TO MATCH JOINTS IN BASE SLAB.
   B. AT SPACING NOT TO EXCEED PAD THICKNESS x 30
   C. TO DIVIDE PAD INTO RECTANGULAR PANELS WITH ASPECT RATIO NOT EXCEEDING 2:1

1 DETAIL
SCALE: 3/4" = 1'-0"

NOTE:
INTERRUPTED REINFORCING BARS IN WALLS & SLAB ON GRADE CLOSEST TO CONCRETE SURFACES SHALL HAVE FULL SPAN LENGTH EXTRA REINFORCING EQUIVALENT TO THE AREA OF INTERRUPTED BARS, PLACE 1/2 THE NUMBER OF BARS ON EACH SIDE OF OPENING TOP & BOTTOM (SIZE TO MATCH TOP & BOTTOM REINFORCING).

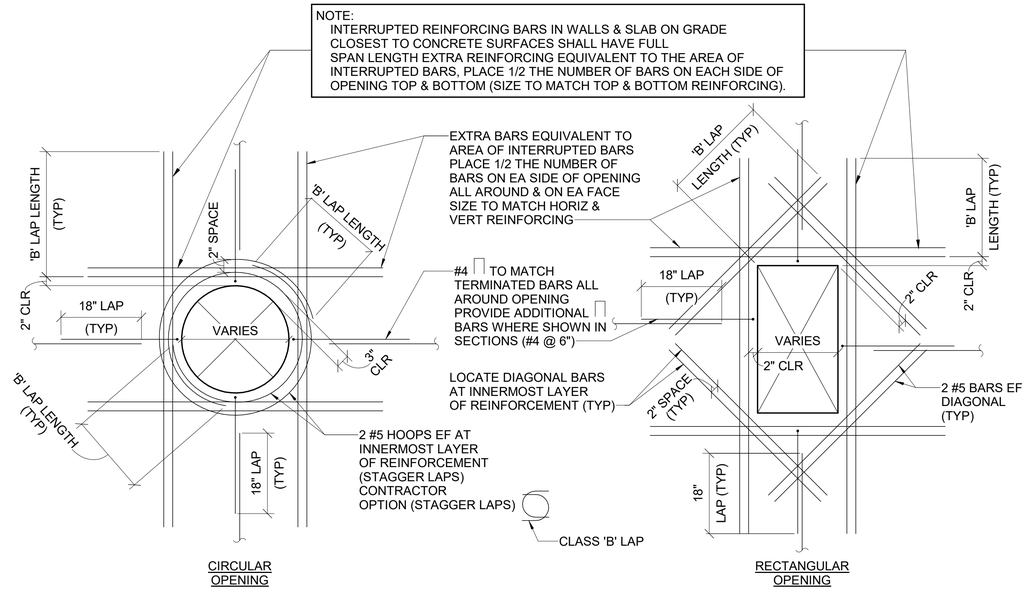

CIRCULAR OPENING

RECTANGULAR OPENING

PLAN VIEW
TYPICAL OPENING REINFORCING DETAILS

2 DETAIL
SCALE: 3/4" = 1'-0"

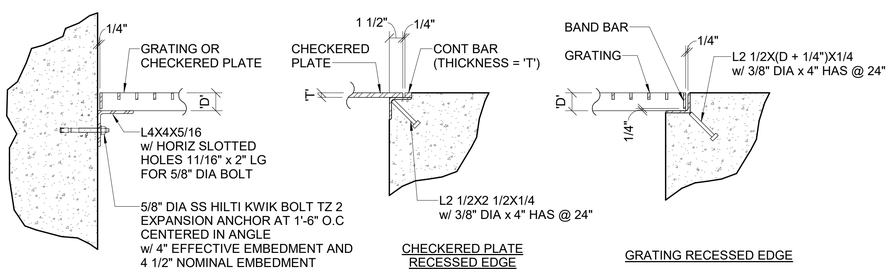

EDGE ANGLE AT WALL

CHECKERED PLATE RECESSED EDGE

GRATING RECESSED EDGE

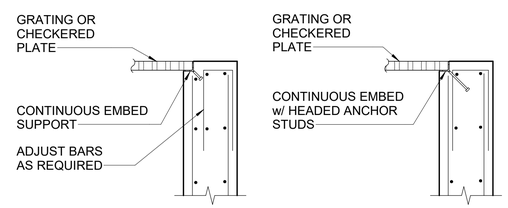

WALL REINFORCEMENT AT CONTINUOUS EMBED

WALL REINFORCEMENT AT INTERMITTENT EMBEDS

GRATING AND CHECKERED PLATE SUPPORT NOTES:
1. ALL NOTES AND DIMENSIONS ARE TYPICAL FOR SIMILAR CONDITIONS.
2. ALL SUPPORTS SHALL BE SAME AS GRATING OR CHECKERED PLATE MATERIALS, WHERE SUPPORTS ARE EMBEDDED IN CONCRETE, SURFACE IN CONTACT WITH CONCRETE SHALL RECEIVE COATING PER SPECIFICATIONS.
3. EMBEDDED ANGLES SHALL BE FUSION WELDED AT CORNERS FULL LENGTH OF CONTACT AND FULL THICKNESS OF MATERIAL.
4. GRATING SPAN SHALL NOT BE MORE THAN 4'-0".

GRATING AND CHECKERED PLATE SUPPORT DETAILS

3 DETAIL
SCALE: 1 1/2" = 1'-0"

GRATING AND CHECKERED PLATE SUPPORT DETAILS

4 DETAIL
SCALE: 3/4" = 1'-0"

REVISIONS:

NO	DATE	BY	DESCRIPTION

The installation shown is to be installed in accordance with the Arizona Water Company standard specifications on file with the Arizona Department of Environmental Quality

Call 811 at Arizona 811.com

W.A. No.: X-XXXX
P.E. No.: XXXX
SYSTEM: XXXX
LEGAL DESC.: XX 1/4 SEC. XX, T. XX X., R. XX X.
TAX DIST.: XXXX
SIB No.: XX-XX
DATE: 03/09/2026
SCALE: AS SHOWN
DRAWN BY: MWK
REVIEWED BY: SMT
CHECKED BY: ACK

ARIZONA WATER COMPANY
3805 N. BLACK CANYON HWY. POST OFFICE BOX 29006
PHOENIX, ARIZONA 85038-9006
(602) 240-6860

PROJECT DESC.: STANFIELD GWS&T USBR GRANT COORDINATION

PROJECT SHEET DESC.: TYPICAL DETAILS 2

GFT consor
3838 Central Avenue • Suite 1900
Phoenix • AZ • 85012
t 602 • 553 • 8817

DWG NO.: S-006

OF 17

90% SUBMITTAL

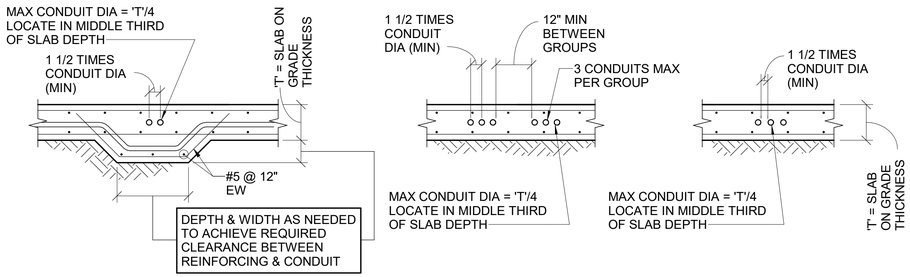

CONDUIT INTERSECTION OUTSIDE MIDDLE THIRD OF SLAB DEPTH

GREATER THAN 3 CONDUITS

NOTES:
1. CONTRACTOR SHALL SUBMIT SHOP DRAWING SHOWING PLACEMENT OF CONDUITS IN SLABS.
2. CONDUIT PLACEMENT NOT CONFORMING TO TYPICAL DETAILS SHALL BE SUBMITTED TO THE STRUCTURAL ENGINEER FOR REINFORCING OR SLAB THICKENING DESIGN.

DETAILS FOR CONDUITS EMBEDDED IN SLAB ON GRADE

1 DETAIL
SCALE: 1/2" = 1'-0"

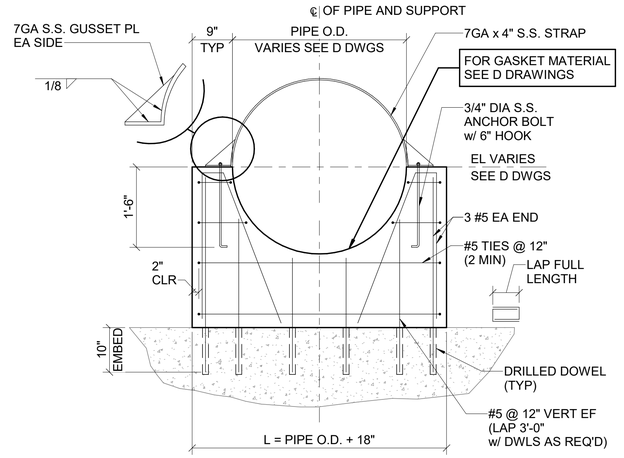

NOTE:
SUPPORT TO BE 12" THICK UNLESS OTHERWISE NOTED.

PIPE SUPPORT DETAIL

2 DETAIL
SCALE: 3/4" = 1'-0"

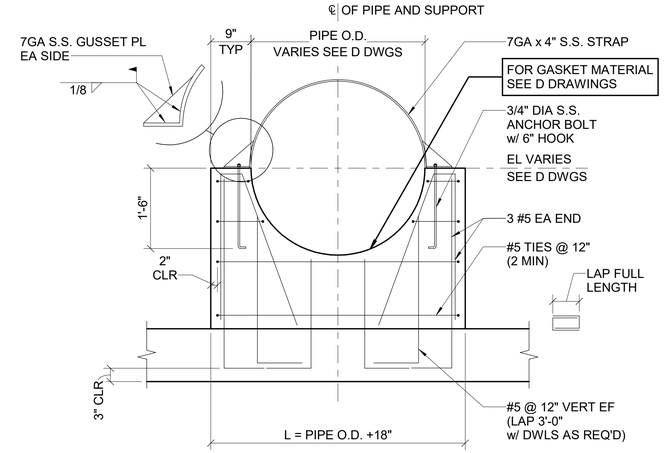

NOTE:
SUPPORT TO BE 12" THICK UNLESS OTHERWISE NOTED.

PIPE SUPPORT DETAIL

3 DETAIL
SCALE: 3/4" = 1'-0"

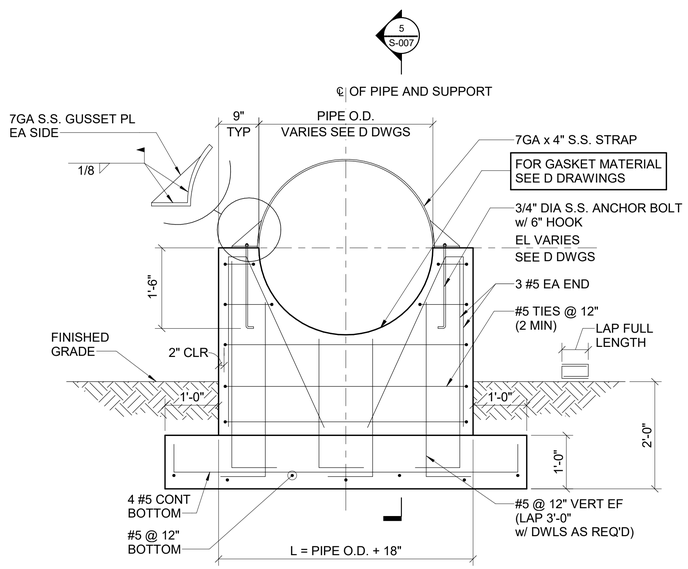

NOTE:
SUPPORT TO BE 12" THICK UNLESS OTHERWISE NOTED.

PIPE SUPPORT DETAIL

4 DETAIL
SCALE: 3/4" = 1'-0"

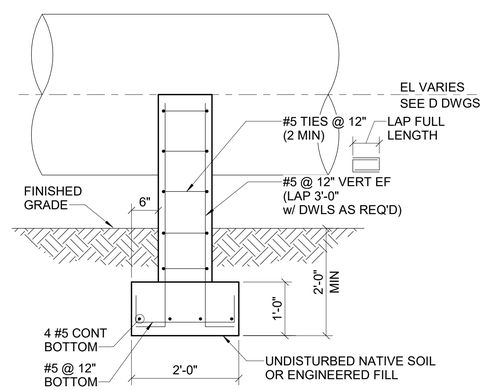

PIPE SUPPORT DETAIL

5 DETAIL
SCALE: 3/4" = 1'-0"

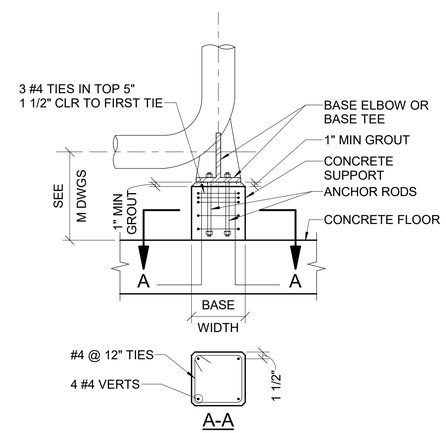

CONCRETE PEDESTAL

6 DETAIL
SCALE: 3/4" = 1'-0"

GFT consor
3838 Central Avenue • Suite 1900
Phoenix • AZ • 85012
t 602 • 553 • 8817

NO	DATE	BY	DESCRIPTION

REVISIONS:

The installation shown is to be installed in accordance with the Arizona Water Company standard specifications on file with the Arizona Department of Environmental Quality

Call 811 at Blue Stakes 811.com

W.A. No.: X-XXXX
P.E. No.: XXXX
SYSTEM: XXXX
LEGAL DESC.: XX 1/4 SEC. XX, T. XX X., R. XX X.
TAX DIST.: XXXX
SBI No.: XX-XX
DATE: 03/09/2026
SCALE: AS SHOWN
DRAWN BY: MWK
REVIEWED BY: SMT
CHECKED BY: ACK

ARIZONA WATER COMPANY
3805 N. BLACK CANYON HWY. POST OFFICE BOX 29006
PHOENIX, ARIZONA 85038-9006
(602) 240-6860

PROJECT DESC.: STANFIELD GWS&T USBR GRANT COORDINATION

PROJECT SHEET DESC.: TYPICAL DETAILS 3

DWG NO.: S-007

OF 17

90% SUBMITTAL

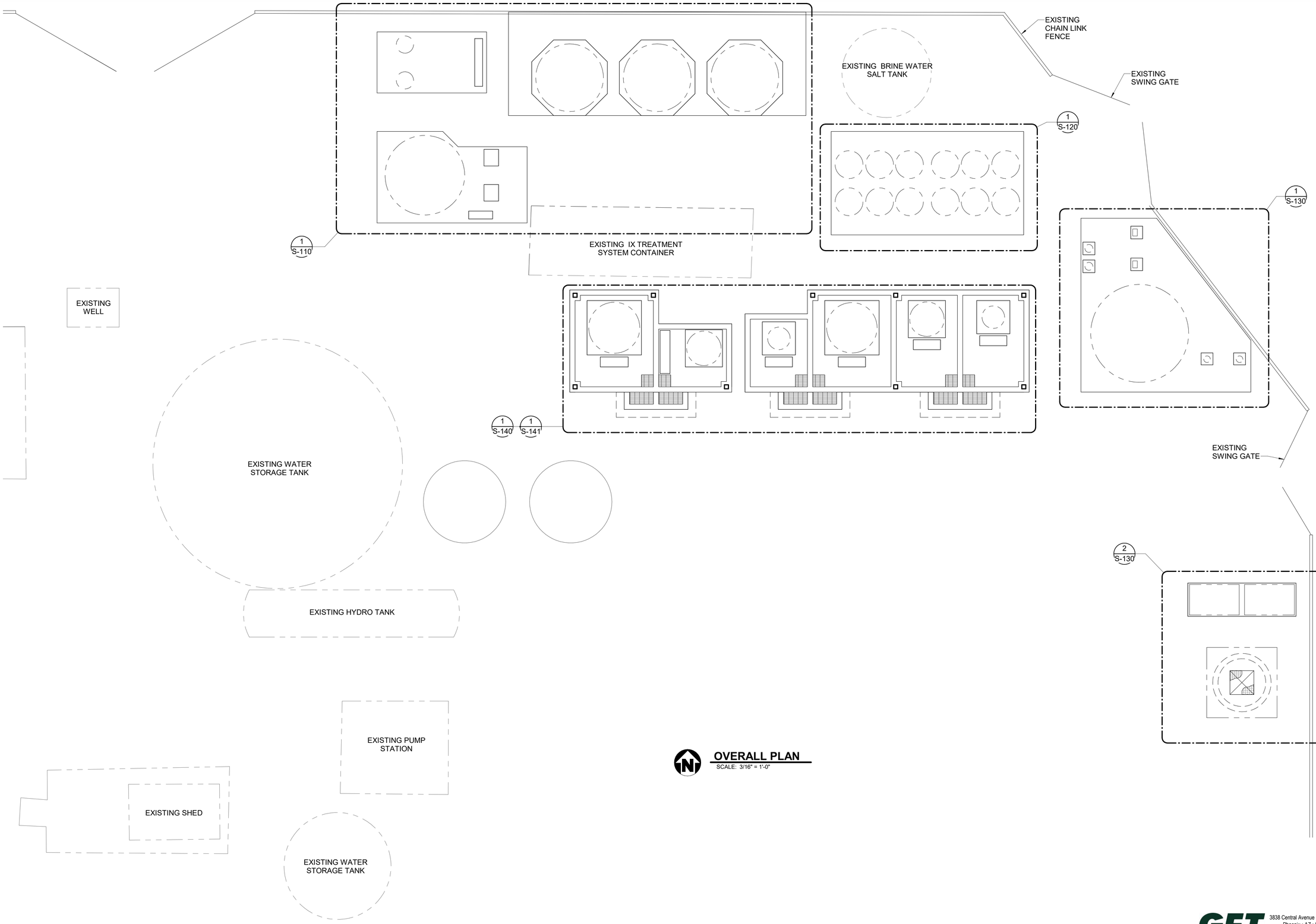

OVERALL PLAN
SCALE: 3/16" = 1'-0"

REVISIONS:

NO	DATE	BY	DESCRIPTION

The installation shown is to be installed in accordance with the Arizona Water Company standard specifications on file with the Arizona Department of Environmental Quality

Contact Arizona 811 at least two full working days before you begin excavation
ARIZONA811
Call 811 or click Arizona811.com

W.A. No.: X-XXXX
P.E. No.: XXXX
SYSTEM: XXXX
LEGAL DESC.: XX 1/4 SEC. XX, T. XX X., R. XX X.
TAX DIST.: XXXX
SIB No.: XX-XX
DATE: 03/09/2026
SCALE: AS SHOWN
DRAWN BY: MWK
REVIEWED BY: SMT
CHECKED BY: ACK

ARIZONA WATER COMPANY
3805 N. BLACK CANYON HWY. POST OFFICE BOX 29006
PHOENIX, ARIZONA 85038-9006
(602) 240-6860

PROJECT DESC.: STANFIELD GWS&T USBR GRANT COORDINATION
PROJECT SHEET DESC.: OVERALL PLAN

GFT
3838 Central Avenue • Suite 1900
Phoenix • AZ • 85012
t 602 • 553 • 8817
consor

DWG NO.: S-100
OF 17

3/9/2026 11:13:04 AM Autodesk Docs://083161_Consor_AZWater_Stanfield_WC/083161_CONSOR_AZWATER_STANFIELD _WC_CENTRAL_S_R24.rvt

90% SUBMITTAL

NOTES:
1. CONTRACTOR TO COORDINATE ALL DIMENSIONS AND ELEVATIONS WITH D DRAWINGS.

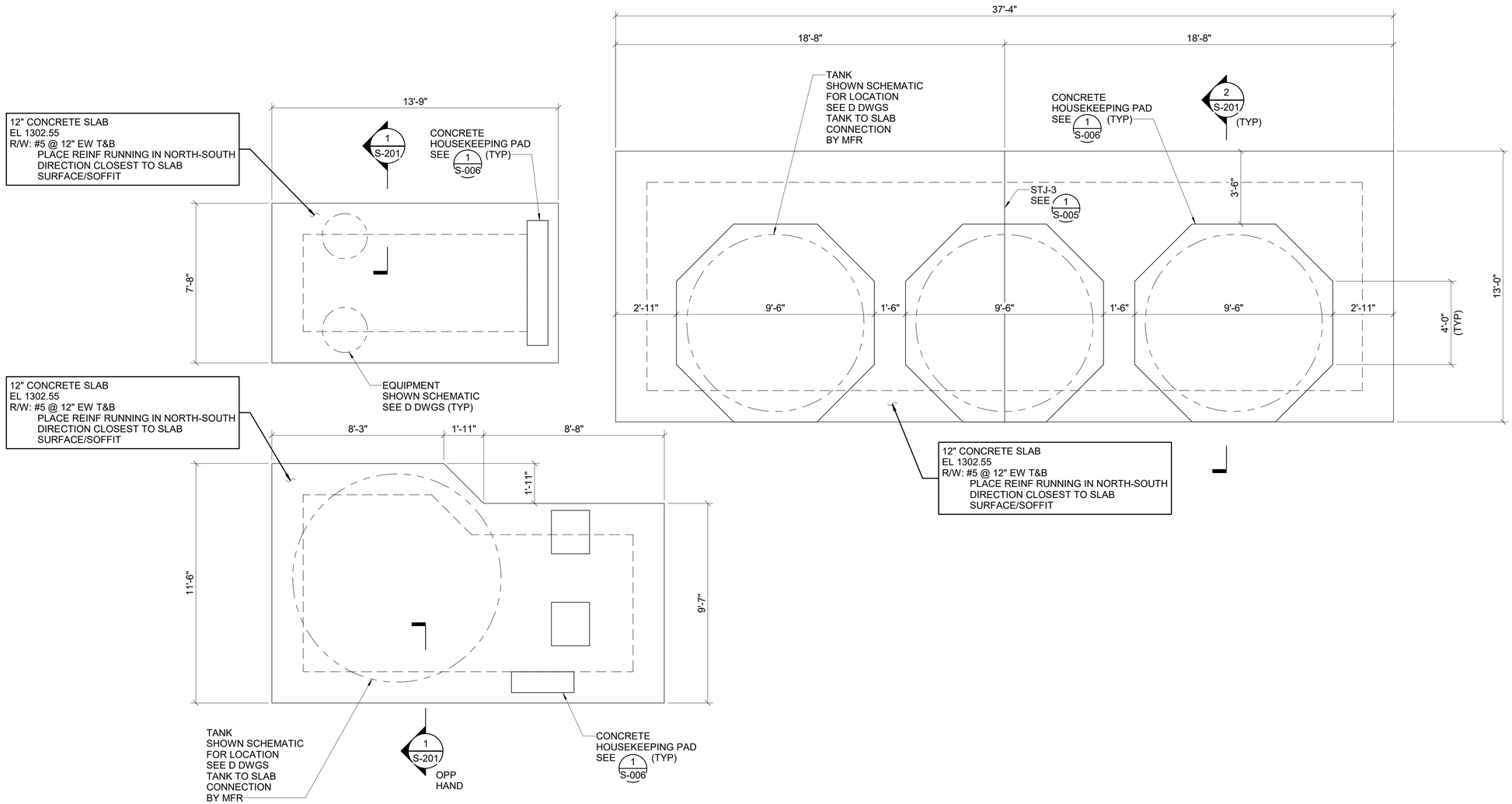

NITRATE TREATMENT SYSTEM FOUNDATION PLAN

SCALE: 3/8" = 1'-0"

REVISIONS:

NO	DATE	BY	DESCRIPTION

The installation shown is to be installed in accordance with the Arizona Water Company standard specifications on file with the Arizona Department of Environmental Quality

Contact Arizona 811 at least two full working days before you begin excavation
ARIZONA811
Call 811 or click Arizona811.com

W.A. No.: X-XXXX
P.E. No.: XXXX
SYSTEM: XXXX
LEGAL DESC.: XX 1/4 SEC. XX, T. XX X., R. XX X.
TAX DIST.: XXXX
SIB No.: XX-XX
DATE: 03/09/2026
SCALE: AS SHOWN
DRAWN BY: MWK
REVIEWED BY: SMT
CHECKED BY: ACK

ARIZONA WATER COMPANY
3805 N. BLACK CANYON HWY. POST OFFICE BOX 29006
PHOENIX, ARIZONA 85038-9006
(602) 240-6860

PROJECT DESC.: STANFIELD GWS&T USBR GRANT COORDINATION
PROJECT SHEET DESC.: NITRATE TREATMENT SYSTEM FOUNDATION PLAN

GFT consor
3838 Central Avenue • Suite 1900
Phoenix • AZ • 85012
t 602 • 553 • 8817

DWG NO.: S-110
OF 17

3/9/2026 11:13:04 AM Autodesk Docs://083161_Consor_AZWater_Stanfield_WC/083161_CONSOR_AZWATER_STANFIELD _WC_CENTRAL_S_R24.rvt

90% SUBMITTAL

NOTES:
1. CONTRACTOR TO COORDINATE ALL DIMENSIONS AND ELEVATIONS WITH D DRAWINGS.

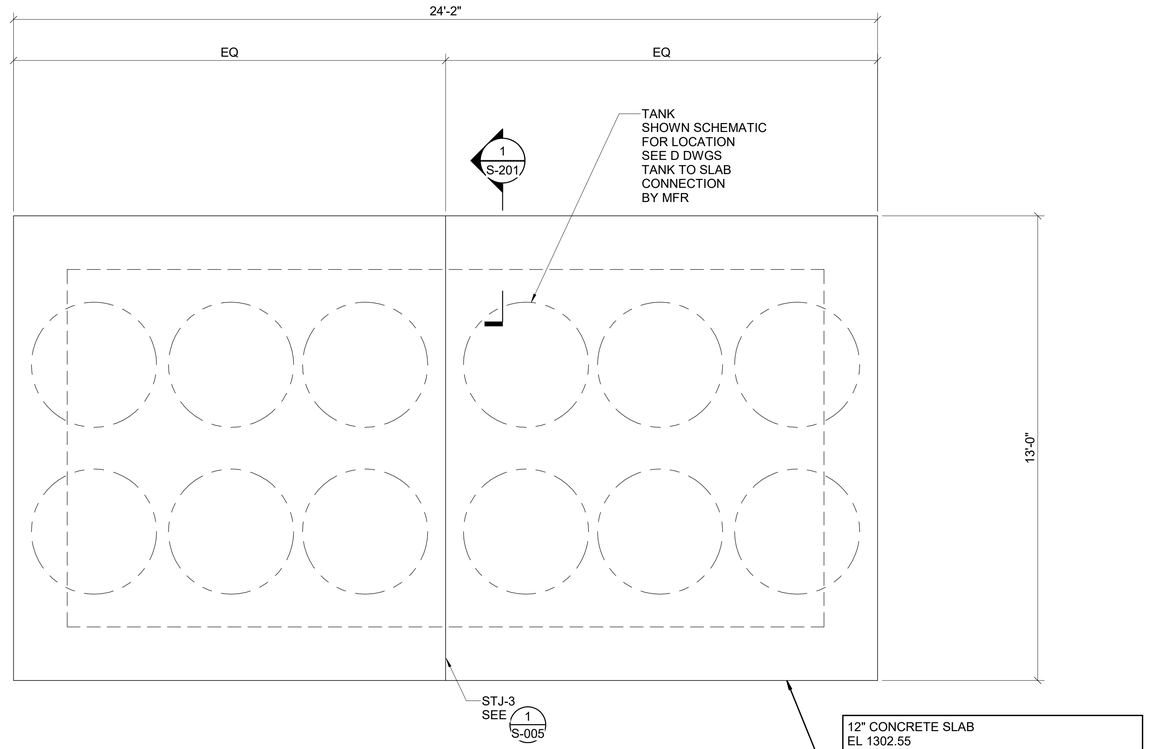

ARSENIC TREATMENT FILTRATION SYSTEM FOUNDATION
SCALE: 1/2" = 1'-0"

REVISIONS:

NO	DATE	BY	DESCRIPTION

The installation shown is to be installed in accordance with the Arizona Water Company standard specifications on file with the Arizona Department of Environmental Quality

Contact Arizona 811 at least two full working days before you begin excavation
ARIZONA811
Call 811 or click Arizona811.com

W.A. No.: X-XXXX
P.E. No.: XXXX
SYSTEM: XXXX
LEGAL DESC.: XX 1/4 SEC. XX, T. XX X., R. XX X.
TAX DIST.: XXXX
SIB No.: XX-XX
DATE: 03/09/2026
SCALE: AS SHOWN
DRAWN BY: MWK
REVIEWED BY: SMT
CHECKED BY: ACK

ARIZONA WATER COMPANY
3805 N. BLACK CANYON HWY. POST OFFICE BOX 29006
PHOENIX, ARIZONA 85038-9006
(602) 240-6860

PROJECT DESC.: STANFIELD GWS&T USBR GRANT COORDINATION
PROJECT SHEET DESC.: ARSENIC TREATMENT FILTRATION SYSTEM FOUNDATION

GFT consor
3838 Central Avenue • Suite 1900
Phoenix • AZ • 85012
t 602 • 553 • 8817

DWG NO.: S-120
OF 17

3/9/2026 11:13:04 AM Autodesk Docs://083161_Consor_AZWater_Stanfield_WC/083161_CONSOR_AZWATER_STANFIELD _WC_CENTRAL_S_R24.rvt

90% SUBMITTAL

NOTES:
1. CONTRACTOR TO COORDINATE ALL DIMENSIONS AND ELEVATIONS WITH D DRAWINGS.

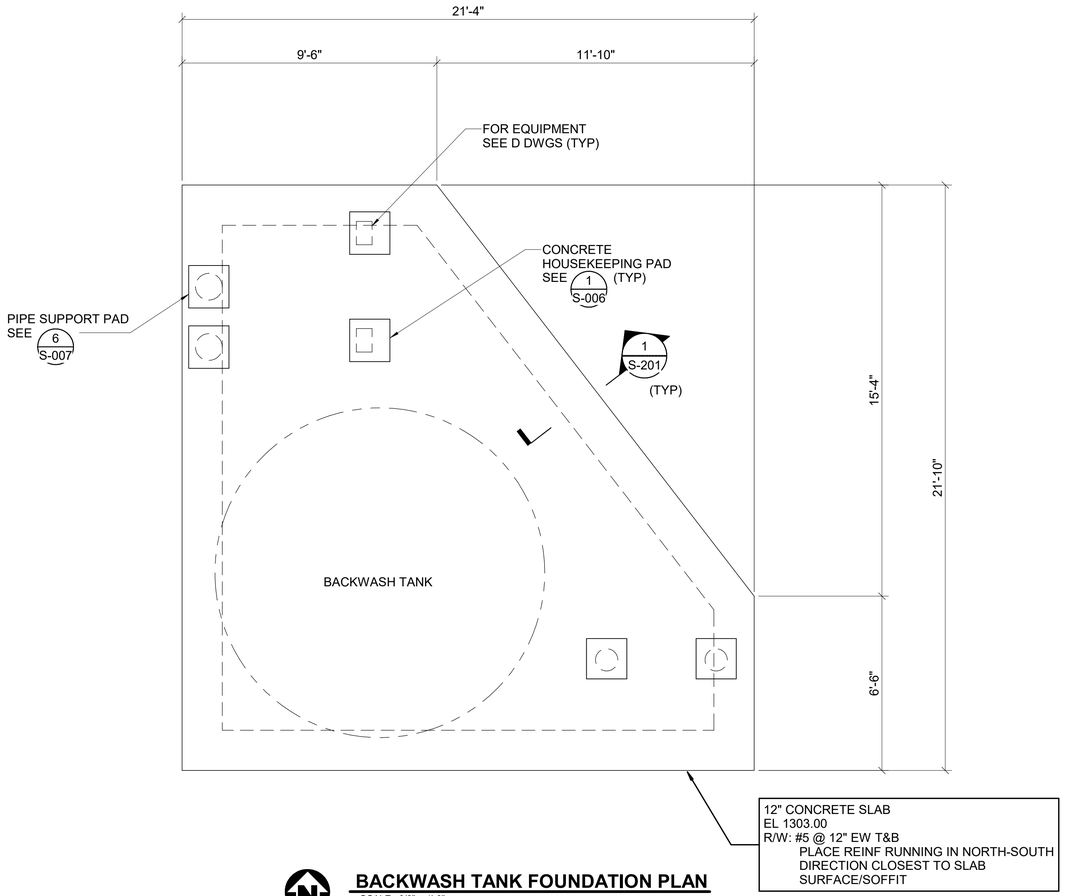

BACKWASH TANK FOUNDATION PLAN
SCALE: 3/8" = 1'-0"

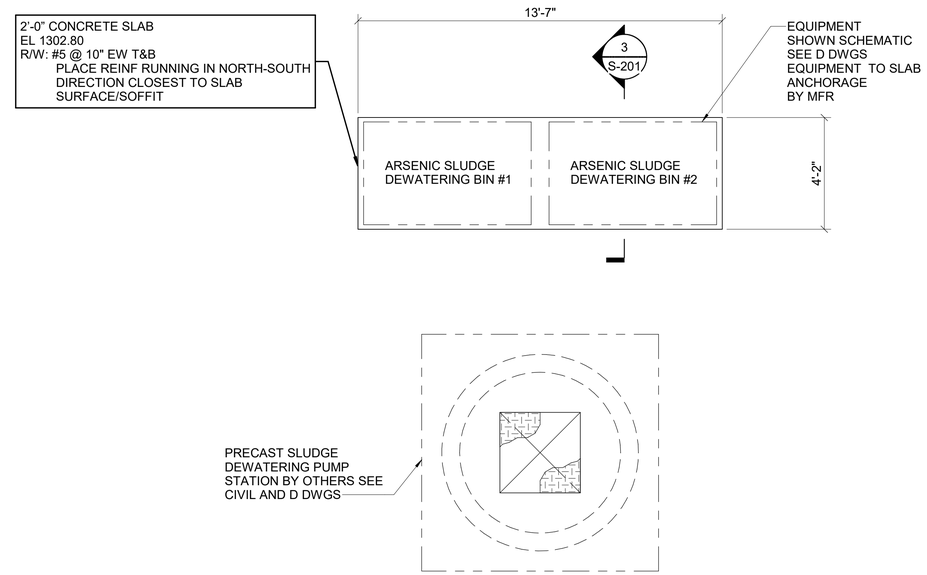

BACKWASH TANK FOUNDATION PLAN
SCALE: 3/8" = 1'-0"

REVISIONS:

NO	DATE	BY	DESCRIPTION

The installation shown is to be installed in accordance with the Arizona Water Company standard specifications on file with the Arizona Department of Environmental Quality

W.A. No.: X-XXXX
P.E. No.: XXXX
SYSTEM: XXXX
LEGAL DESC.: XX 1/4 SEC. XX, T. XX X., R. XX X.
TAX DIST.: XXXX
SBI No.: XX-XX
DATE: 03/09/2026
SCALE: AS SHOWN
DRAWN BY: MWK
REVIEWED BY: SMT
CHECKED BY: ACK

ARIZONA WATER COMPANY
3805 N. BLACK CANYON HWY. POST OFFICE BOX 29006
PHOENIX, ARIZONA 85038-9006
(602) 240-6860

PROJECT DESC.: STANFIELD GWS&T USBR GRANT COORDINATION

PROJECT SHEET DESC.: **BACKWASH TANK FOUNDATION PLANS**

GFT consor
3838 Central Avenue • Suite 1900
Phoenix • AZ • 85012
t 602 • 553 • 8817

DWG NO.: S-130
OF 17

90% SUBMITTAL

NOTES:
1. CONTRACTOR TO COORDINATE ALL DIMENSIONS AND ELEVATIONS WITH D DRAWINGS.

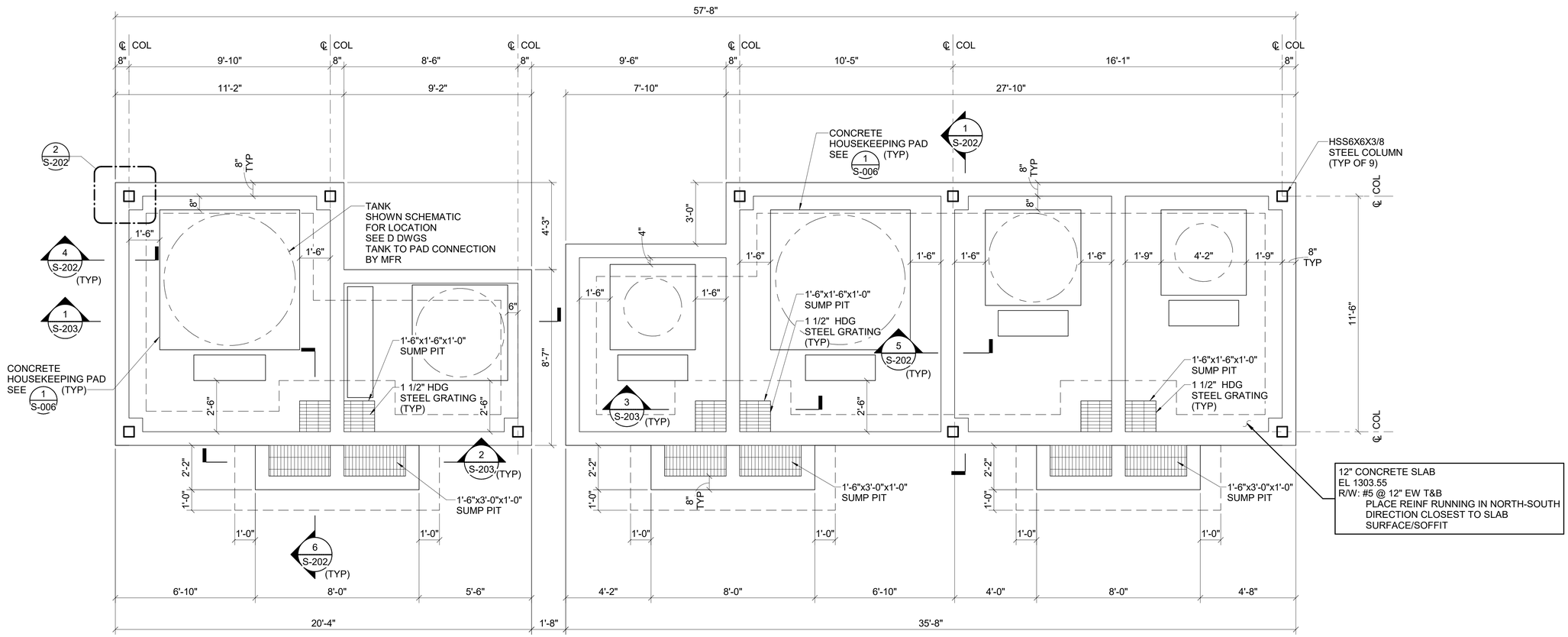

TREATMENT CHEMICAL SYSTEM LOWER PLAN

SCALE: 3/8" = 1'-0"

REVISIONS:

NO	DATE	BY	DESCRIPTION

The installation shown is to be installed in accordance with the Arizona Water Company standard specifications on file with the Arizona Department of Environmental Quality

Call 811 at least two full working days before you begin excavation
Call 811 at Blue Stakes of Utah
Call 811 at Blue Stakes of Arizona

W.A. No.: X-XXXX
P.E. No.: XXXX
SYSTEM: XXXX
LEGAL DESC.: XX 1/4 SEC. XX, T. XX X., R. XX X.
TAX DIST.: XXXX
SBI No.: XX-XX
DATE: 03/09/2026
SCALE: AS SHOWN
DRAWN BY: MWK
REVIEWED BY: SMT
CHECKED BY: ACK

ARIZONA WATER COMPANY
3805 N. BLACK CANYON HWY. POST OFFICE BOX 29006
PHOENIX, ARIZONA 85038-9006
(602) 240-6860

PROJECT DESC.: STANFIELD GWS&T USBR GRANT COORDINATION

PROJECT SHEET DESC.: **TREATMENT CHEMICAL SYSTEM LOWER PLAN**

GFT consor
3838 Central Avenue • Suite 1900
Phoenix • AZ • 85012
t 602 • 553 • 8817

DWG NO.: S-140

90% SUBMITTAL

3/9/2026 11:13:05 AM Autodesk Docs://083161_Consor_AZWater_Stanfield_WC/083161_CONSOR_AZWATER_STANFIELD _WC_CENTRAL_S_R24.rvt

NOTES:
1. CONTRACTOR TO COORDINATE ALL DIMENSIONS AND ELEVATIONS WITH D DRAWINGS.

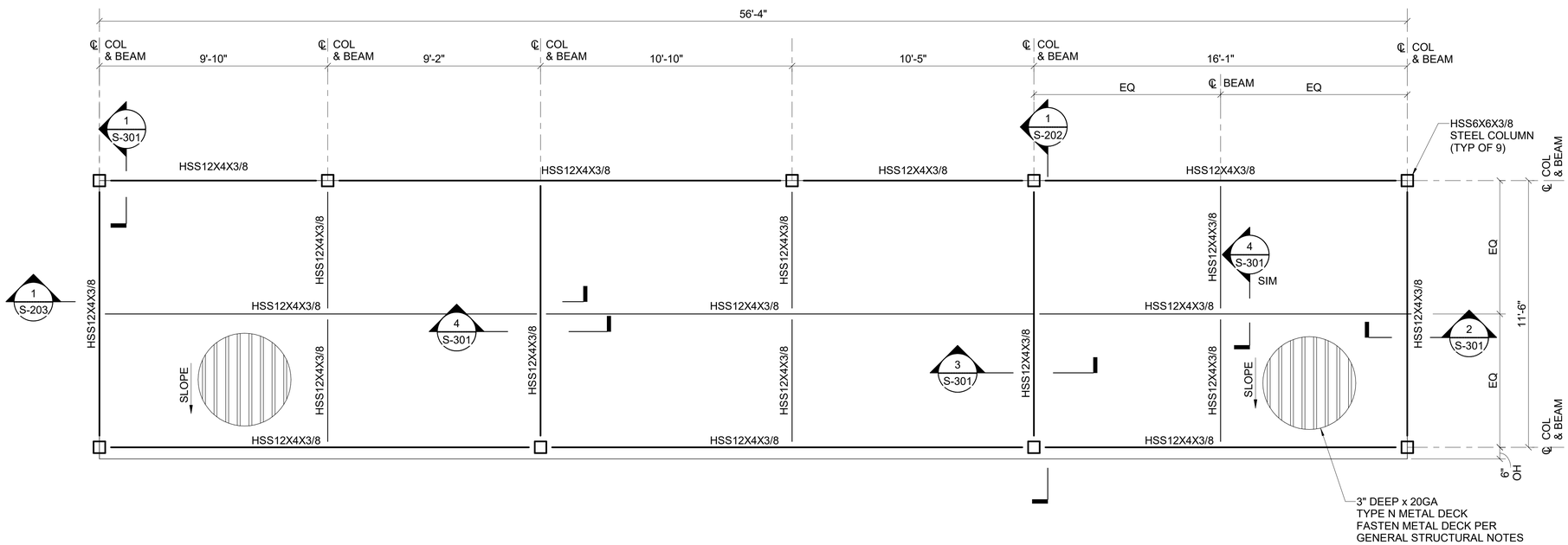

TREATMENT CHEMICAL SYSTEM UPPER PLAN

SCALE: 3/8" = 1'-0"

NO	DATE	BY	DESCRIPTION

REVISIONS:

The installation shown is to be installed in accordance with the Arizona Water Company standard specifications on file with the Arizona Department of Environmental Quality

W.A. No.: X-XXXX
P.E. No.: XXXX
SYSTEM: XXXX
LEGAL DESC.: XX 1/4 SEC. XX, T. XX X., R. XX X.
TAX DIST.: XXXX
SIB No.: XX-XX
DATE: 03/09/2026
SCALE: AS SHOWN
DRAWN BY: MWK
REVIEWED BY: SMT
CHECKED BY: ACK

ARIZONA WATER COMPANY
3805 N. BLACK CANYON HWY. POST OFFICE BOX 29006
PHOENIX, ARIZONA 85038-9006
(602) 240-6860

PROJECT DESC.: STANFIELD GWS&T USBR GRANT COORDINATION

PROJECT SHEET DESC.: **TREATMENT CHEMICAL SYSTEM UPPER PLAN**

GFT consor
3838 Central Avenue • Suite 1900
Phoenix • AZ • 85012
t 602 • 553 • 8817

DWG NO.: S-141

OF 17

90% SUBMITTAL

3/9/2026 11:13:05 AM Autodesk Docs://083161_Consor_AZWater_Stanfield_WC/083161_CONSOR_AZWATER_STANFIELD _WC_CENTRAL_S_R24.rvt

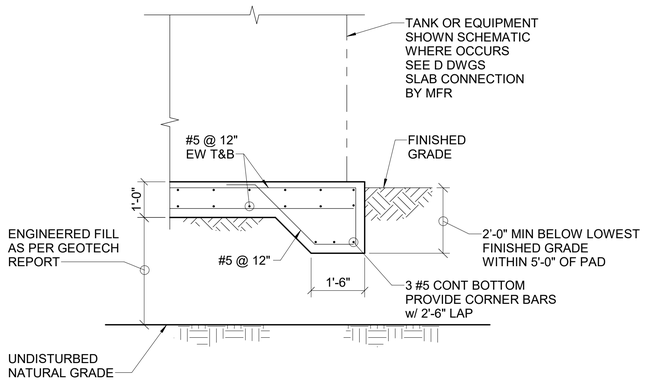

1 S-110 **SECTION**
SCALE: 1/2" = 1'-0"

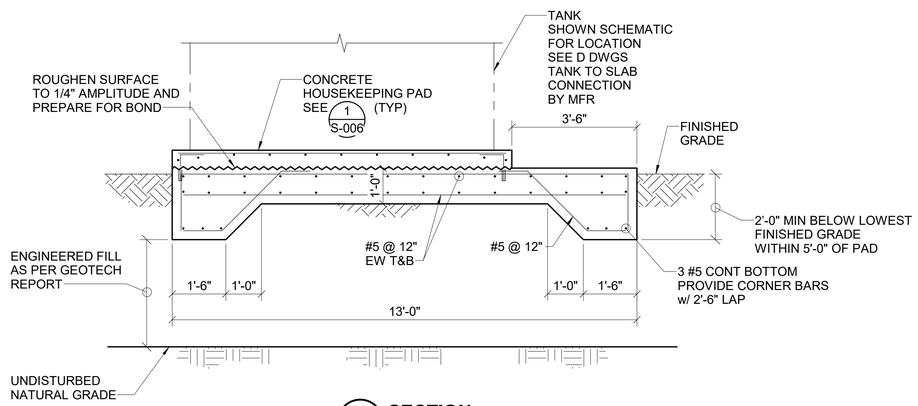

2 S-110 **SECTION**
SCALE: 1/2" = 1'-0"

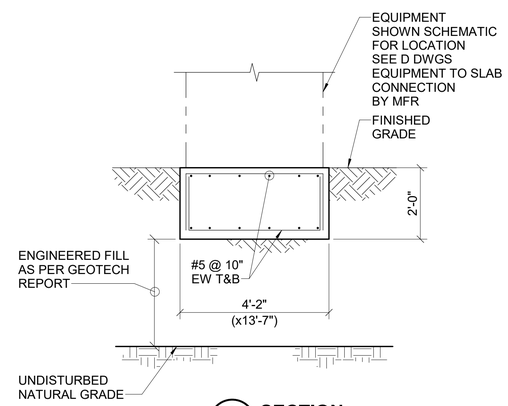

3 S-130 **SECTION**
SCALE: 1/2" = 1'-0"

REVISIONS:

NO	DATE	BY	DESCRIPTION

The installation shown is to be installed in accordance with the Arizona Water Company standard specifications on file with the Arizona Department of Environmental Quality

Contact Arizona 811 at least two full working days before you begin excavation
ARIZONA811
Call 811 or click Arizona811.com

W.A. No.: X-XXXX
P.E. No.: XXXX
SYSTEM: XXXX
LEGAL DESC.: XX 1/4 SEC. XX, T. XX X., R. XX X.
TAX DIST.: XXXX
SIB No.: XX-XX
DATE: 03/09/2026
SCALE: AS SHOWN
DRAWN BY: MWK
REVIEWED BY: SMT
CHECKED BY: ACK

ARIZONA WATER COMPANY
3805 N. BLACK CANYON HWY. POST OFFICE BOX 29006
PHOENIX, ARIZONA 85038-9006
(602) 240-6860

PROJECT DESC.: STANFIELD GWS&T USBR GRANT COORDINATION
PROJECT SHEET DESC.: **FOUNDATION SECTIONS AND DETAILS 1**

GFT
3838 Central Avenue • Suite 1900
Phoenix • AZ • 85012
t 602 • 553 • 8817
consor

DWG NO.: S-201
OF 17

3/9/2026 11:13:06 AM Autodesk Docs://083161_Consor_AZWater_Stanfield_WC/083161_CONSOR_AZWATER_STANFIELD _WC_CENTRAL_S_R24.rvt

90% SUBMITTAL

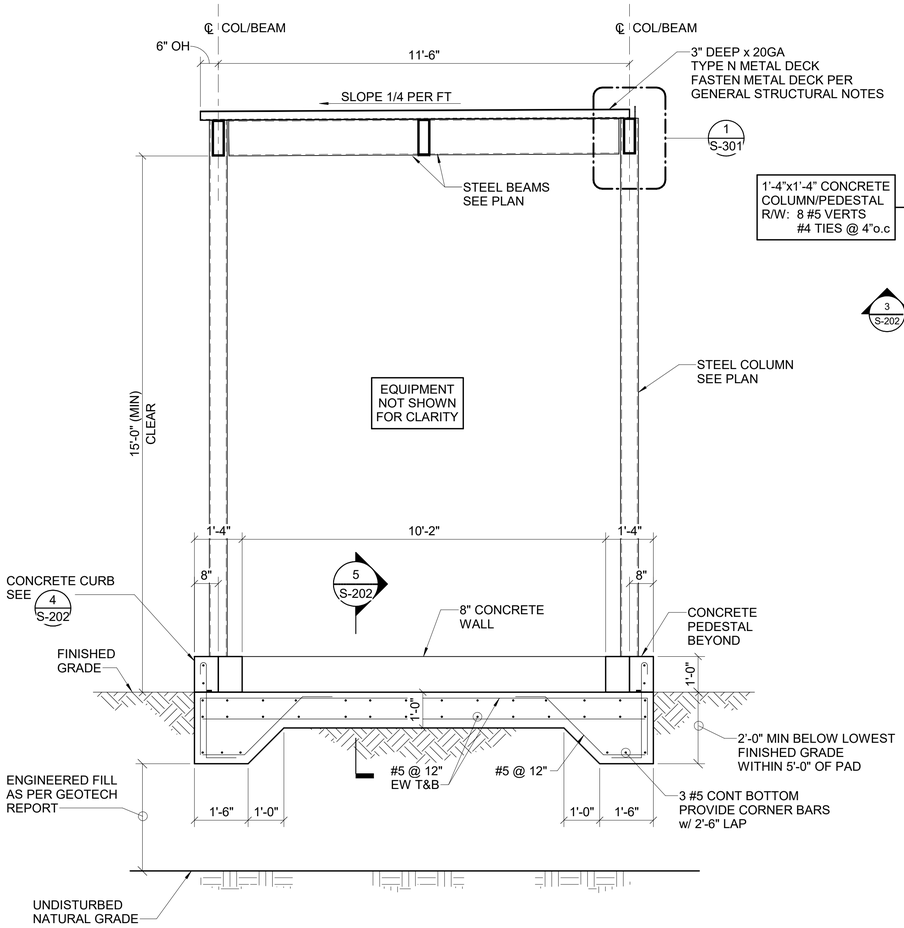

1 S-140 **SECTION**
SCALE: 1/2" = 1'-0"

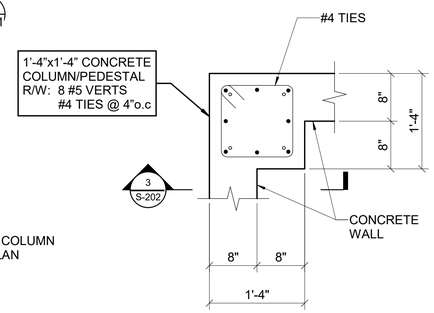

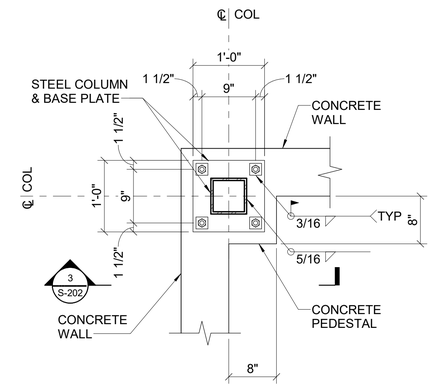

2 S-140 **DETAIL**
SCALE: 1" = 1'-0"

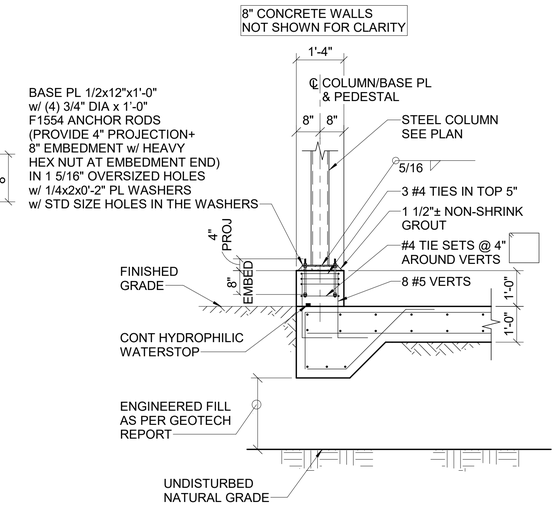

3 S-202 **SECTION**
SCALE: 1/2" = 1'-0"

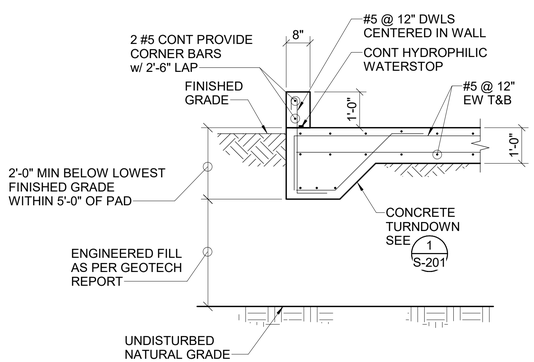

4 S-140 **SECTION**
SCALE: 1/2" = 1'-0"

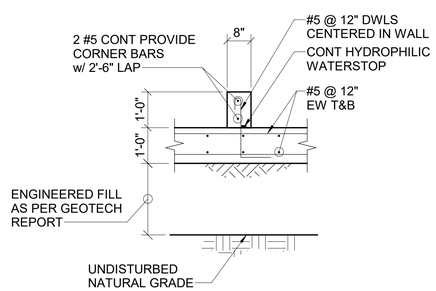

5 S-140 **SECTION**
SCALE: 1/2" = 1'-0"

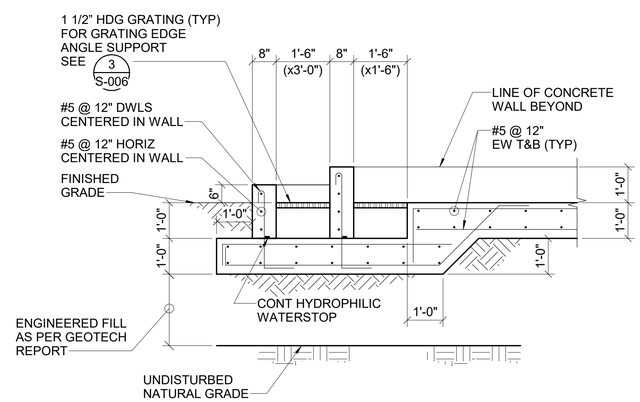

6 S-140 **SECTION**
SCALE: 1/2" = 1'-0"

NO	DATE	BY	DESCRIPTION

REVISIONS:

The installation shown is to be installed in accordance with the Arizona Water Company standard specifications on file with the Arizona Department of Environmental Quality

AZ 811 Call 811 or click Arizona811.com

W.A. No.: X-XXXX
P.E. No.: XXXX
SYSTEM: XXXX
LEGAL DESC.: XX 1/4 SEC. XX, T. XX X., R. XX X.
TAX DIST.: XXXX
SIB No.: XX-XX
DATE: 03/09/2026
SCALE: AS SHOWN
DRAWN BY: MWK
REVIEWED BY: SMT
CHECKED BY: ACK

ARIZONA WATER COMPANY
3805 N. BLACK CANYON HWY. POST OFFICE BOX 29006
PHOENIX, ARIZONA 85038-9006
(602) 240-6860

PROJECT DESC.: STANFIELD GWS&T USBR GRANT COORDINATION

PROJECT SHEET DESC.: **FOUNDATION SECTIONS AND DETAILS 2**

GFT consor
3838 Central Avenue • Suite 1900
Phoenix • AZ • 85012
t 602 • 553 • 8817

DWG NO.: S-202

OF 17

90% SUBMITTAL

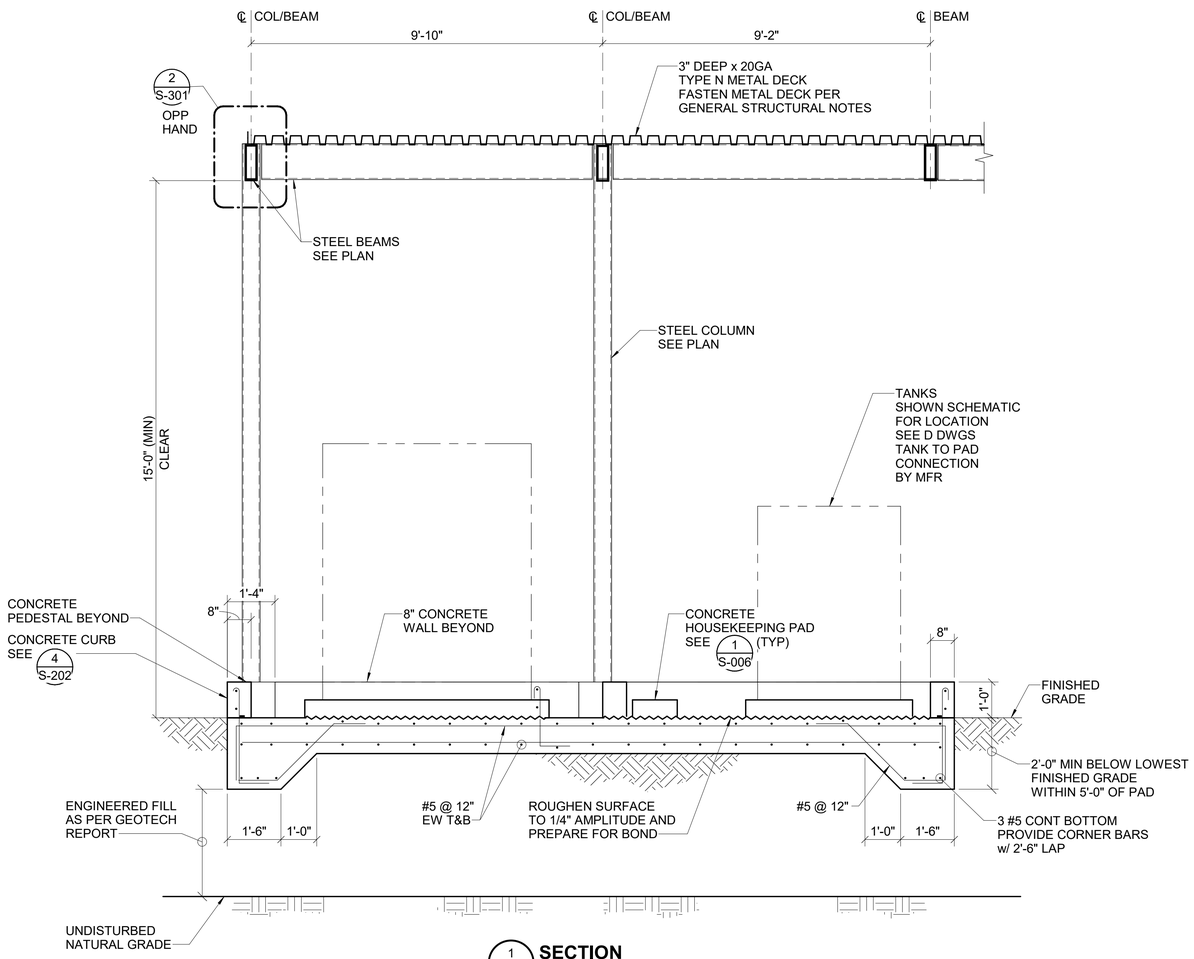

1 S-140 **SECTION**
SCALE: 1/2" = 1'-0"

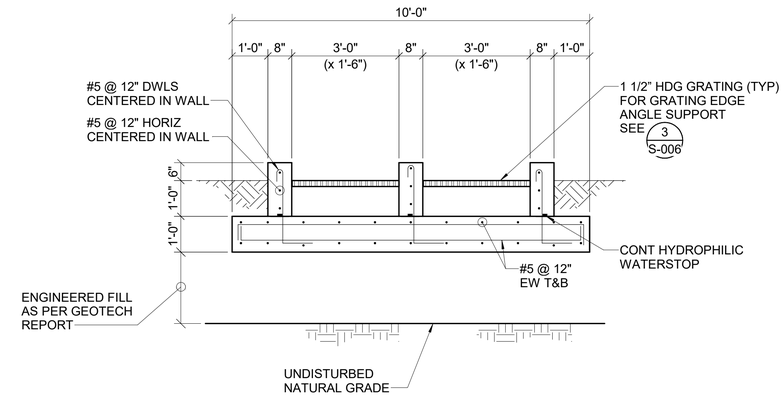

2 S-140 **SECTION**
SCALE: 1/2" = 1'-0"

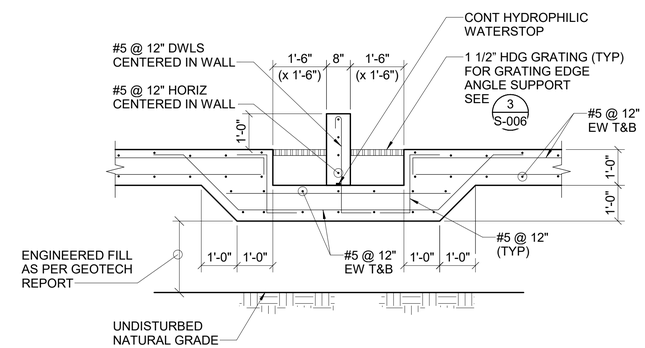

3 S-140 **SECTION**
SCALE: 1/2" = 1'-0"

REVISIONS:

NO	DATE	BY	DESCRIPTION

The installation shown is to be installed in accordance with the Arizona Water Company standard specifications on file with the Arizona Department of Environmental Quality

Contact Arizona 811 at least two full working days before you begin excavation
ARIZONA811
Call 811 or click Arizona811.com

W.A. No.: X-XXXX
P.E. No.: XXXX
SYSTEM: XXXX
LEGAL DESC.: XX 1/4 SEC. XX, T. XX X., R. XX X.
TAX DIST.: XXXX
SIB No.: XX-XX
DATE: 03/09/2026
SCALE: AS SHOWN
DRAWN BY: MWK
REVIEWED BY: SMT
CHECKED BY: ACK

ARIZONA WATER COMPANY
3805 N. BLACK CANYON HWY. POST OFFICE BOX 29006
PHOENIX, ARIZONA 85038-9006
(602) 240-6860

PROJECT DESC: STANFIELD GWS&T USBR GRANT COORDINATION

PROJECT SHEET DESC: **FOUNDATION SECTIONS AND DETAILS 3**

GFT consor
3838 Central Avenue • Suite 1900
Phoenix • AZ • 85012
t 602 • 553 • 8817

DWG NO.: S-203

3/9/2026 11:13:07 AM Autodesk Docs://083161_Consor_AZWater_Stanfield_WC/083161_CONSOR_AZWATER_STANFIELD _WC_CENTRAL_S_R24.rvt

90% SUBMITTAL

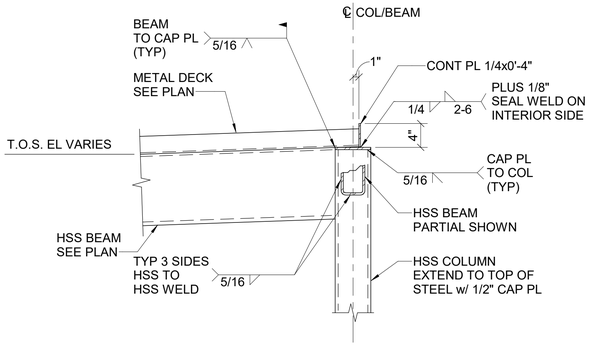

1 S-141 **SECTION**
SCALE: 1" = 1'-0"

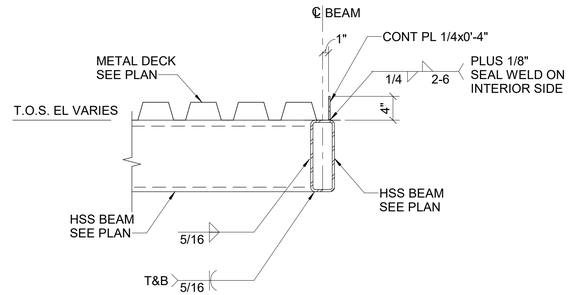

2 S-141 **SECTION**
SCALE: 1" = 1'-0"

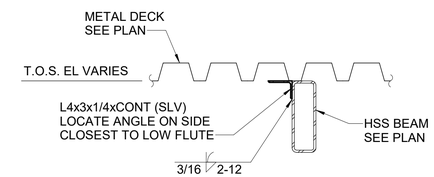

3 S-141 **SECTION**
SCALE: 1" = 1'-0"

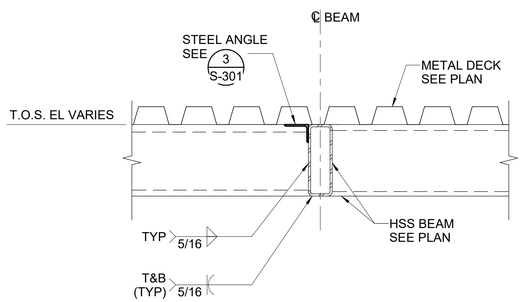

4 S-141 **SECTION**
SCALE: 1" = 1'-0"

REVISIONS:

NO	DATE	BY	DESCRIPTION

The installation shown is to be installed in accordance with the Arizona Water Company standard specifications on file with the Arizona Department of Environmental Quality

Call 811 at least two full working days before you begin excavation
ARIZONA BLUE STAKE, INC.
Call 811 or Click Arizona811.com

W.A. No.: X-XXXX
P.E. No.: XXXX
SYSTEM: XXXX
LEGAL DESC.: XX 1/4 SEC. XX, T. XX X., R. XX X.
TAX DIST.: XXXX
SBI No.: XX-XX
DATE: 03/09/2026
SCALE: AS SHOWN
DRAWN BY: MWK
REVIEWED BY: SMT
CHECKED BY: ACK

ARIZONA WATER COMPANY
3805 N. BLACK CANYON HWY. POST OFFICE BOX 29006
PHOENIX, ARIZONA 85038-9006
(602) 240-6860

PROJECT DESC.: STANFIELD GWS&T USBR GRANT COORDINATION

PROJECT SHEET DESC.: **CANOPY FRAMING SECTIONS AND DETAILS**

GFT
3838 Central Avenue • Suite 1900
Phoenix • AZ • 85012
t 602 • 553 • 8817
consor

DWG NO.: S-301

90% SUBMITTAL

PIPE SYMBOLS

DESCRIPTION	SYMBOL
PROPOSED	
HIDDEN	
BELOW GRADE	
EXISTING	
EXISTING HIDDEN	
DEMOLISH	
FUTURE	
CENTERLINE	
PIPE CUT	
PIPE BREAK	
PIPE BREAK (SINGLE LINE)	

PIPE JOINTS

DESCRIPTION	SYMBOL
FLANGED	
MECHANICAL JOINT	
GROOVED	
PVC	
STEEL	
PUSH-ON	
TAP	
SERVICE SADDLE	

PIPE FITTINGS

DESCRIPTION	SYMBOL
90° ELBOW	
45° ELBOW	
22.5° ELBOW	
11.25° ELBOW	
BASE ELBOW	
TEE	
CROSS	
LATERAL	
REDUCER (CONCENTRIC)	
REDUCER (ECCENTRIC)	
REDUCING 90° ELBOW	
EXPANSION JOINT (RESTRAINED)	
EXPANSION JOINT (UNRESTRAINED)	
DISMANTLING JOINT	
FLANGE COUPLING ADAPTER (FCA)	
RESTRAINED FLANGE COUPLING ADAPTER (RFCA)	
FLANGED x FLARED	

VALVE SYMBOLS

DESCRIPTION	PLAN	SECTION	SINGLE LINE
BALL VALVE			
BUTTERFLY VALVE			
BUTTERFLY VALVE (WAFER / LUGGED)			
CHECK VALVE (SWING)			
CHECK VALVE (BALL)			
DIAPHRAGM VALVE			
GATE VALVE			
GLOBE VALVE			
KNIFE GATE VALVE			
PINCH VALVE			
PLUG VALVE			

VALVE SYMBOLS

DESCRIPTION	PLAN	SECTION	SINGLE LINE
PRESSURE REDUCING VALVE (STRAIGHT)			
PRESSURE REDUCING VALVE (ANGLED)			
BACK PRESSURE REGULATOR VALVE (STRAIGHT)			
PRESSURE GAUGE			
AIR VALVE (COMBINATION)			
AIR VALVE (AIR RELEASE)			
AIR VALVE (AIR/VACUUM)			
FLOW METER			M

PIPE TAG

100-8"-DI1-PI-1001

- FLOW STREAM DIRECTION
- FLOW STREAM IDENTIFICATION NUMBER (IF APPLICABLE)
- PIPE SERVICE, SEE PIPE SERVICE IDENTIFIERS ON SHEETS I001 P&ID LEGENDS
- PIPE MATERIAL, SEE PIPE SPECIFICATION IDENTIFIERS ON SHEETS I001 P&ID LEGENDS
- PIPE DIAMETER, INCHES
- AREA, SEE AREA IDENTIFIERS ON SHEET G002 SHEET INDEX (IF APPLICABLE)

EQUIPMENT & VALVE TAG

100-TNK-101

- EQUIPMENT & VALVE IDENTIFICATION NUMBER
- EQUIPMENT & VALVE TYPE, SEE EQUIPMENT & VALVE TAG IDENTIFIERS ON SHEETS I001 & I002 P&ID LEGENDS
- AREA, SEE AREA IDENTIFIERS ON SHEET G002 SHEET INDEX (IF APPLICABLE)

GENERAL NOTES:

1. THIS IS A STANDARD PROCESS LEGEND, NOT ALL OF THE INFORMATION MAY BE USED ON THIS PROJECT.

2. ONLY FLANGED END CONNECTIONS ARE SHOWN HERE. OTHER FITTING PATTERNS ARE SHOWN SIMILARLY ON THE CONSTRUCTION DRAWINGS. ALSO SEE PIPING SPECIFICATIONS.

GENERIC PIPING NOTES:

1. LAY PIPE TO UNIFORM GRADE BETWEEN INDICATED ELEVATION POINTS.

2. SIZE OF FITTINGS SHOWN ON DRAWINGS SHALL CORRESPOND TO ADJACENT STRAIGHT RUN OF PIPE, UNLESS OTHERWISE INDICATED. TYPE OF JOINT AND FITTING MATERIAL SHALL BE THE SAME AS SHOWN FOR ADJACENT STRAIGHT RUN OF PIPE.

3. LOCATION AND NUMBER OF PIPE HANGERS AND PIPE SUPPORTS SHOWN IS ONLY APPROXIMATE. CONTRACTOR SHALL DESIGN SUPPORTS AS SPECIFIED.

4. ALL JOINTS SHALL BE WATERTIGHT. WALL PIPES SHALL BE USED WHEREVER PIPING PASSES FROM A STRUCTURE TO A BACKFILL.

5. ALL FLEXIBLE CONNECTORS AND COUPLING ADAPTERS SHALL BE PROVIDED WITH THRUST PROTECTION AS SPECIFIED, UNLESS OTHERWISE NOTED. THRUST PROTECTION SHALL BE ADEQUATE FOR TEST PRESSURES SPECIFIED.

6. SYMBOLS, LEGENDS AND PIPE USE IDENTIFICATIONS SHOWN SHALL BE FOLLOWED THROUGHOUT THE DRAWINGS, WHEREVER APPLICABLE. NOT ALL OF THE VARIOUS COMPONENTS ARE NECESSARILY USED IN THE PROJECT.

7. ALL BURIED PIPING SPECIFIED TO BE PRESSURE TESTED, EXCEPT FLANGED, WELDED OR SCREWED PIPING, SHALL BE PROVIDED WITH THRUST PROTECTION AS SPECIFIED, UNLESS OTHERWISE NOTED.

8. NUMBER AND LOCATION OF UNIONS SHOWN ON DRAWINGS IS ONLY APPROXIMATE. PROVIDE ALL UNIONS NECESSARY TO FACILITATE CONVENIENT REMOVAL OF VALVES AND MECHANICAL EQUIPMENT.

9. WHERE A GROOVED END COUPLING IS SHOWN, IT SHALL BE THE RIGID JOINT TYPE, UNLESS OTHERWISE SPECIFIED. WHERE A FLANGED COUPLING ADAPTER IS SHOWN, A STANDARD FLANGE SHALL BE JOINED TO THE COUPLING ADAPTER.

PIPE PENTRATIONS

WALL SPOOL (FLANGED)

WALL SPOOL (FLANGED x MJ)

LINK SEAL

INTERIOR EXTERIOR

consor

REVISIONS:

NO	DATE	BY	DESCRIPTION
A	10/31/25	FT	30% SUBMITTAL
B	12/12/25	FT	60% SUBMITTAL
C	03/03/26	FT	90% SUBMITTAL

The installation shown is to be installed in accordance with the Arizona Water Company standard specifications on file with the Arizona Department of Environmental Quality

Assured as-Builts are BYT at least one foot, including elbows, tees, valves, and fittings

Call 811 or other dig/locate/call/ticket

W.A. No.: P.E. No.:

SYSTEM:

LEGAL DESC.:

TAX DIST.: SIB No.:

DATE: 03/03/2026 SCALE: AS SHOWN

DRAWN BY: JLC REVIEWED BY: SDC CHECKED BY: FHT

ARIZONA WATER COMPANY

3805 N. BLACK CANYON HWY. POST OFFICE BOX 29006
PHOENIX, ARIZONA 85038-9006
(602) 240-6860

PROJECT DESC: STANFIELD GWS&T USBR GRANT COORDINATION

PROJECT SHEET DESC: PROCESS LEGEND AND NOTES

DWG. No.: D-001

SHEET 31 OF 79

Drawing Path and Name: C:\Users\jared.cloud\DC\ACCDocs\Consor\Stanfield GWS&T USBR Grant Coordination\Project Files\1-Design\07-PROC\2-SHEETS\W242167AZ.00_D-001.dwg, Plotted Date: March 5, 2026 12:38 PM By: Jared Cloud

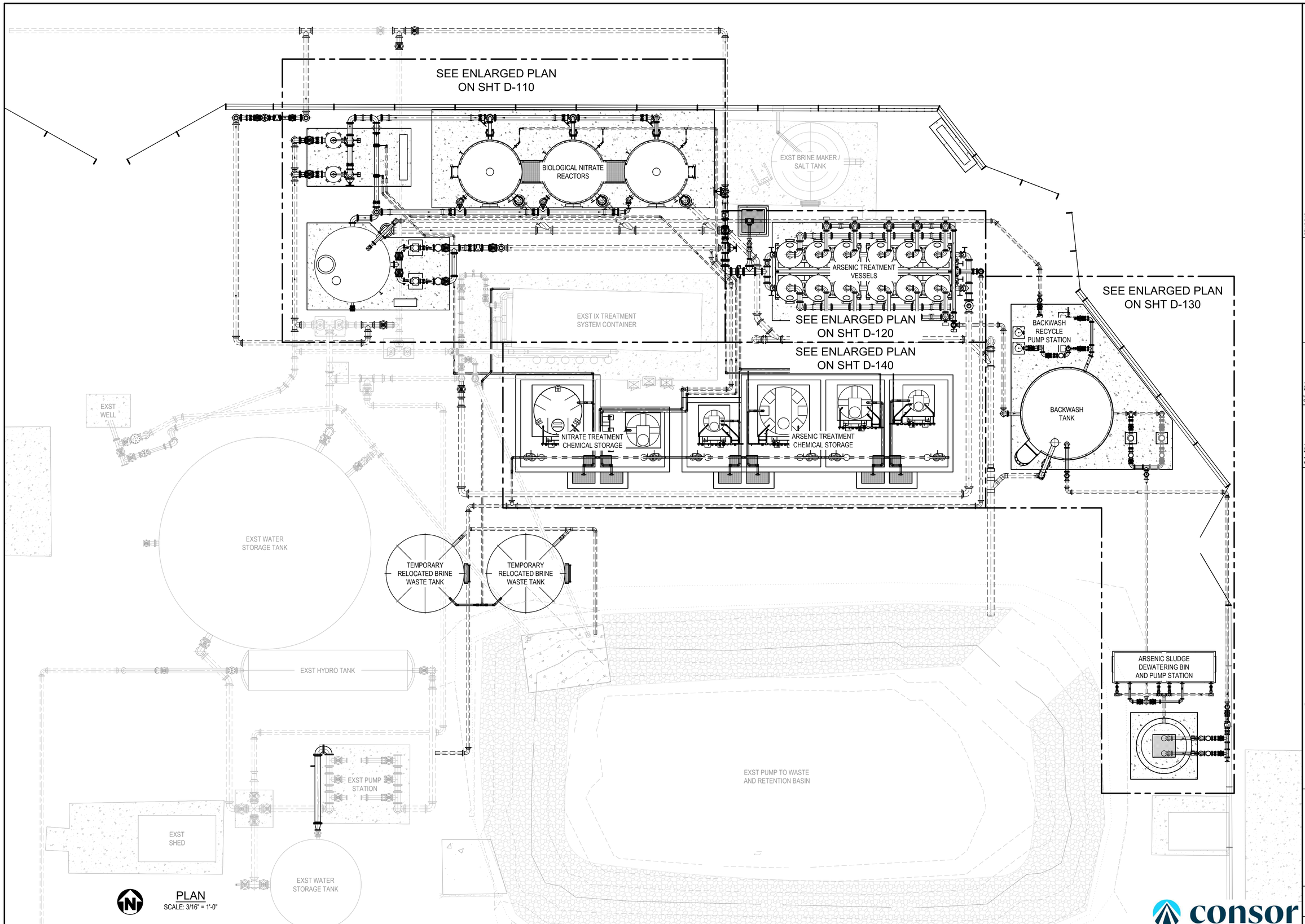

PLAN
SCALE: 3/16" = 1'-0"

REVISIONS:

NO	DATE	BY	DESCRIPTION
A	10/3/25	FT	30% SUBMITTAL
B	12/12/25	FT	60% SUBMITTAL
C	03/03/26	FT	90% SUBMITTAL

The installation shown is to be installed in accordance with the Arizona Water Company standard specifications on file with the Arizona Department of Environmental Quality

Revised drawings 811 at least one full working day before you dig, call Arizona 811 or other (Arizona811.com)

W.A. No.:
P.E. No.:
SYSTEM:
LEGAL DESC.:
TAX DIST.:
SBI No.:
DATE: 03/03/2026
SCALE: AS SHOWN
DRAWN BY: JLC
REVIEWED BY: SDC
CHECKED BY: FHT

ARIZONA WATER COMPANY
3805 N. BLACK CANYON HWY. POST OFFICE BOX 29006
PHOENIX, ARIZONA 85038-9006
(602) 240-6860

PROJECT DESC: STANFIELD GWS&T USBR GRANT COORDINATION
PROJECT SHEET DESC: OVERALL SITE PLAN

consor

DWG. No.: D-100
SHEET 32 OF 80

Drawing Path and Name: C:\Users\jared.cloud\DC\ACCDocs\Consor\Stanfield GWS&T USBR Grant Coordination\Project Files\1-Design\07-PROC\2-SHEETS\W242167AZ.00_D-100.dwg, Plotted Date: March 9, 2026 1:39 PM By: Jared Cloud

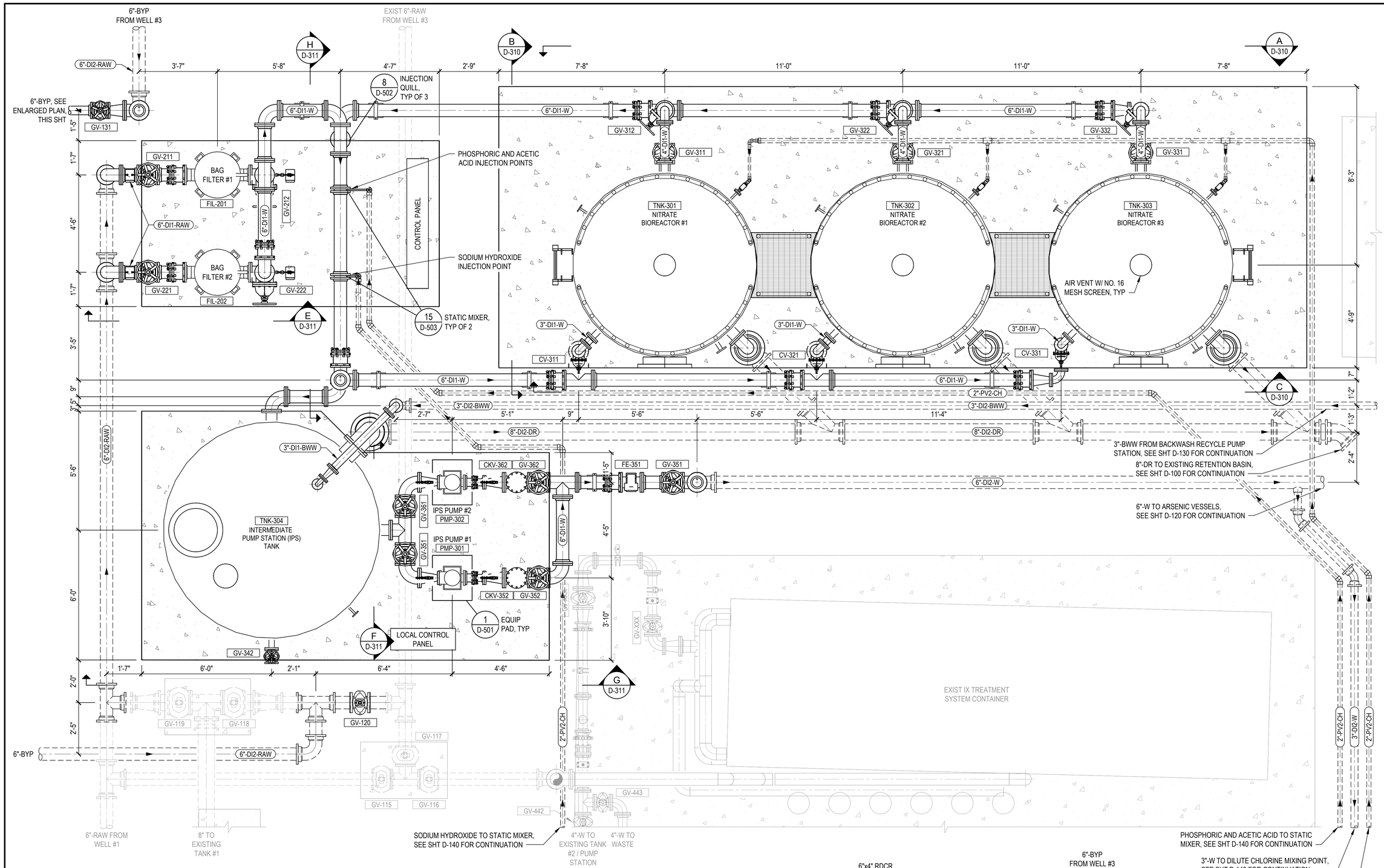

REVISIONS:			
NO	DATE	BY	DESCRIPTION
A	10/3/25	FT	30% SUBMITTAL
B	12/12/25	FT	60% SUBMITTAL
C	03/03/26	FT	90% SUBMITTAL

The installation shown is to be installed in accordance with the Arizona Water Company standard specifications on file with the Arizona Department of Environmental Quality

Revised drawings are to be dated one year from original date shown and expire thereafter.

Call 811 or other Arizona811 Members

W.A. No.:
SYSTEM:
LEGAL DESC.:
TAX DIST.:
DATE: 03/03/2026
DRAWN BY: JLC
REVIEWED BY: SDC
SCALE: AS SHOWN
CHECKED BY: FHT
P.E. No.:
SIB No.:

ARIZONA WATER COMPANY
3805 N. BLACK CANYON HWY. POST OFFICE BOX 29006
PHOENIX, ARIZONA 85038-9006
(602) 240-6860

PROJECT DESC: STANFIELD GWS&T USBR GRANT COORDINATION

PROJECT SHEET DESC: NITRATE TREATMENT SYSTEM ENLARGED PLAN

DWG. No.: D-110

SHEET 33 OF 79

consor

Drawing Path and Name: C:\Users\jared.cloud\DC\ACCDocs\Consor\Stanfield GWS&T USBR Grant Coordination\Project Files\1-Design\07-PROC\2-SHEETS\W242167AZ.00_D-110.dwg, Plotted Date: March 9, 2026 8:23 AM By: Jared Cloud

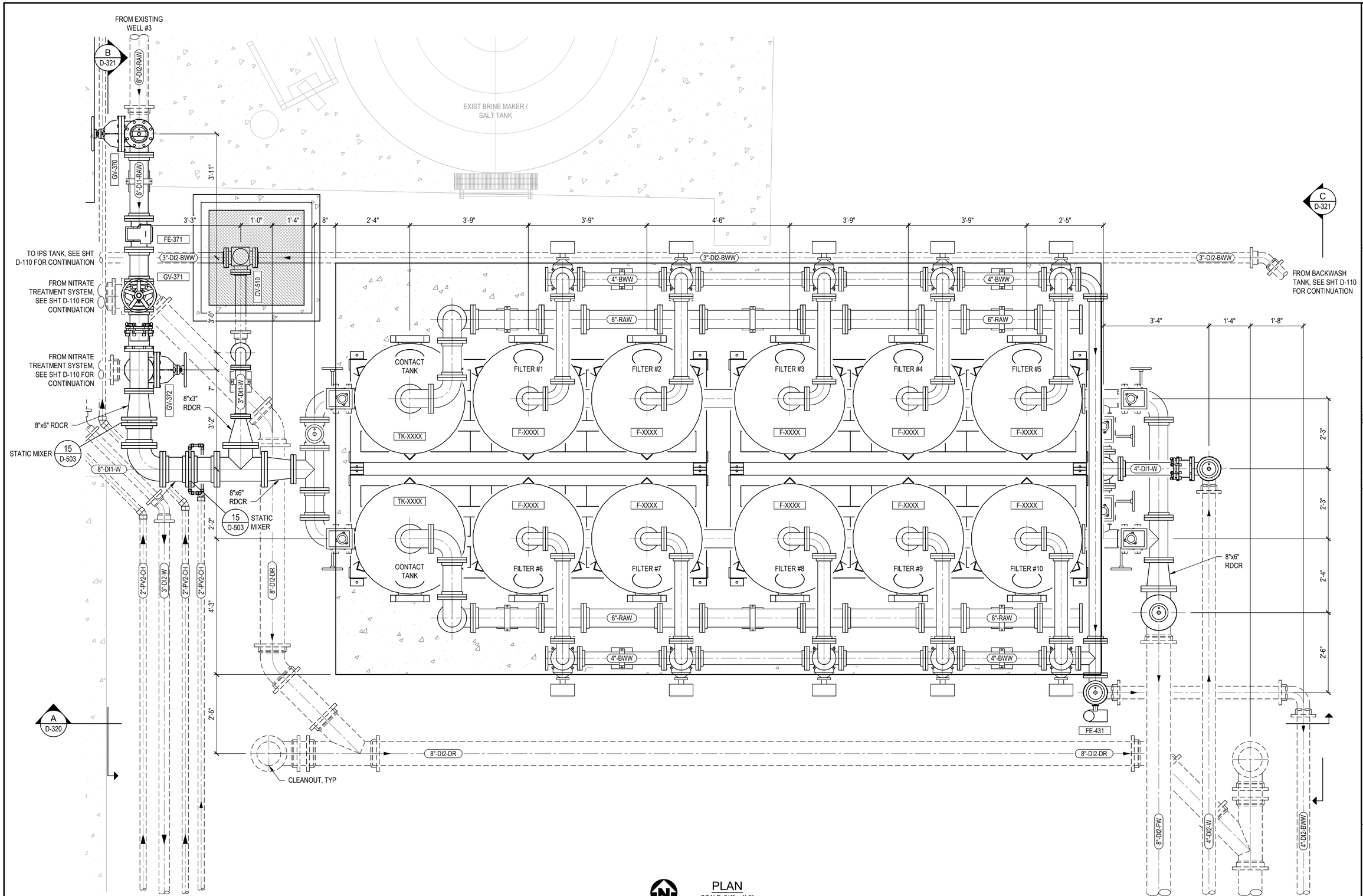

PLAN
SCALE: 3/4" = 1'-0"

consor

REVISIONS:			
NO	DATE	BY	DESCRIPTION
A	10/3/25	FT	30% SUBMITTAL
B	12/12/25	FT	60% SUBMITTAL
C	03/03/26	FT	90% SUBMITTAL

The installation shown is to be installed in accordance with the Arizona Water Company standard specifications on file with the Arizona Department of Environmental Quality

Revised drawings 811 at least one full working day before you start work.
Call 811 or other jurisdiction's numbers

W.A. No.:
P.E. No.:
SYSTEM:
LEGAL DESC.:
TAX DIST.:
SIB No.:
DATE: 03/03/2026
SCALE: AS SHOWN
DRAWN BY: JLC
REVIEWED BY: SDC
CHECKED BY: FHT

ARIZONA WATER COMPANY
3805 N. BLACK CANYON HWY. POST OFFICE BOX 29006
PHOENIX, ARIZONA 85038-9006
(602) 240-6860

PROJECT DESC: STANFIELD GWS&T USBR GRANT COORDINATION
PROJECT SHEET DESC: ARSENIC TREATMENT FILTRATION SYSTEM ENLARGED PLAN

DWG. No.: D-120
SHEET 34 OF 79

Drawing Path and Name: C:\Users\jared.cloud\DC\ACCDocs\Consor\Stanfield GWS&T USBR Grant Coordination\Project Files\1-Design\07-PROC\2-SHEETS\W242167AZ.00_D-120.dwg, Plotted Date: March 9, 2026 8:26 AM By: Jared Cloud

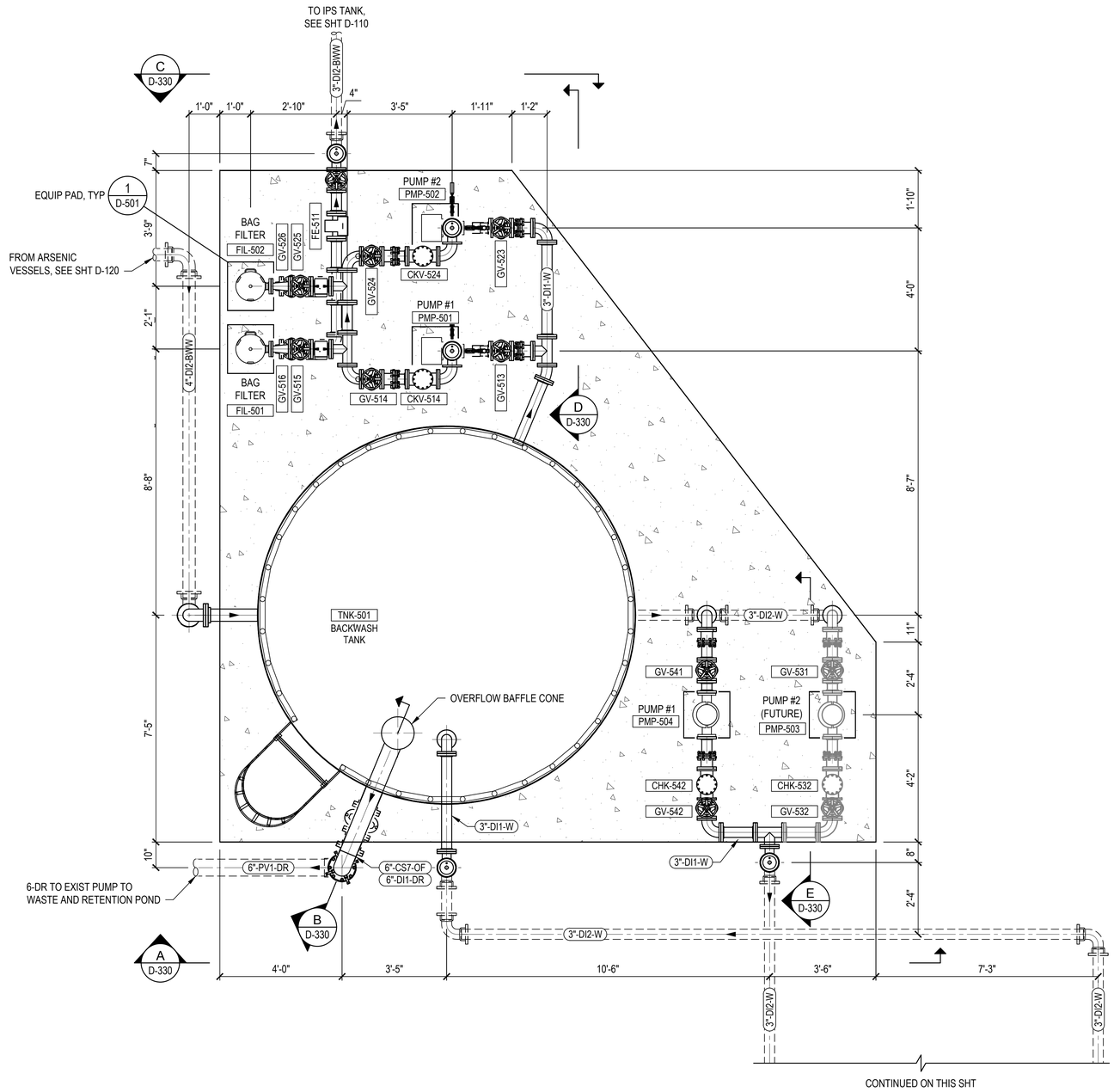

PLAN
SCALE: 1/2" = 1'-0"

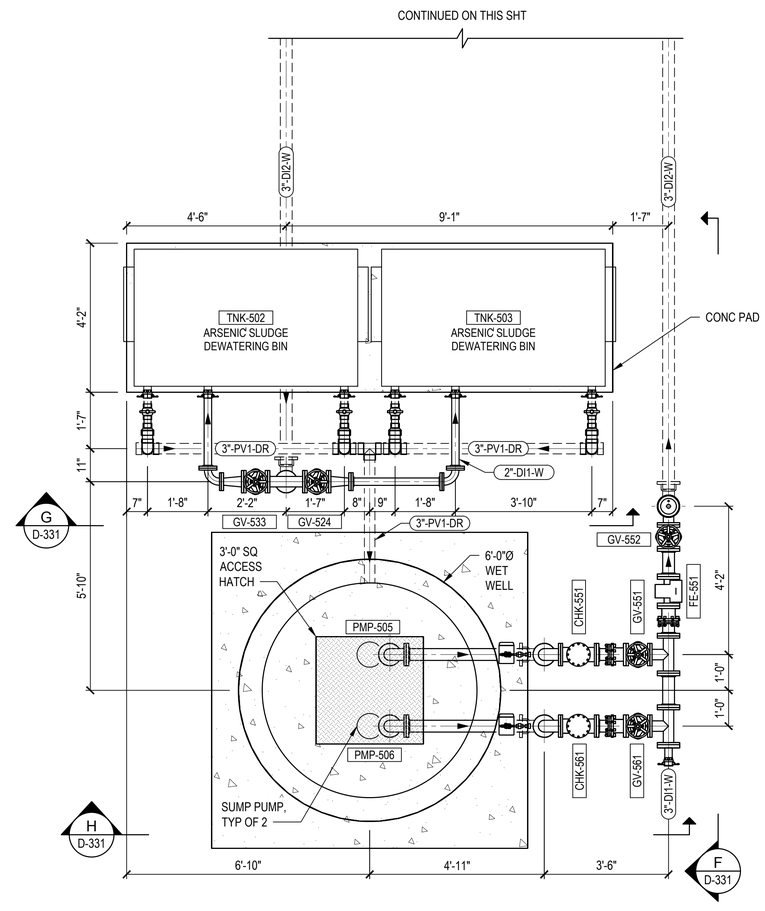

PLAN
SCALE: 1/2" = 1'-0"

REVISIONS:

NO	DATE	BY	DESCRIPTION
A	10/31/25	FT	30% SUBMITTAL
B	12/12/25	FT	60% SUBMITTAL
C	03/03/26	FT	90% SUBMITTAL

The installation shown is to be installed in accordance with the Arizona Water Company standard specifications on file with the Arizona Department of Environmental Quality

Revised drawings 8½" x 11 (least one side) overlaying original drawing scale, are acceptable

Call 811 or other Arizona 811 Centers

W.A. No.:
SYSTEM:
LEGAL DESC.:
TAX DIST.:
DATE: 03/03/2026
DRAWN BY: JLC
REVIEWED BY: SDC
CHECKED BY: FHT
SCALE: AS SHOWN
P.E. No.:
SIB No.:

ARIZONA WATER COMPANY
3805 N. BLACK CANYON HWY. POST OFFICE BOX 29006
PHOENIX, ARIZONA 85038-9006
(602) 240-6860

PROJECT DESC: STANFIELD GWS&T USBR GRANT COORDINATION

PROJECT SHEET DESC: BACKWASH TANK ENLARGED PLAN

consor

DWG. No.: D-130

SHEET 35 OF 79

Drawing Path and Name: C:\Users\jared.cloud\DC\ACCDocs\Consor\Stanfield GWS&T USBR Grant Coordination\Project Files\1-Design\07-PROC\2-SHEETS\W242167AZ.00_D-130.dwg, Plotted Date: March 5, 2026 12:52 PM By: Jared Cloud

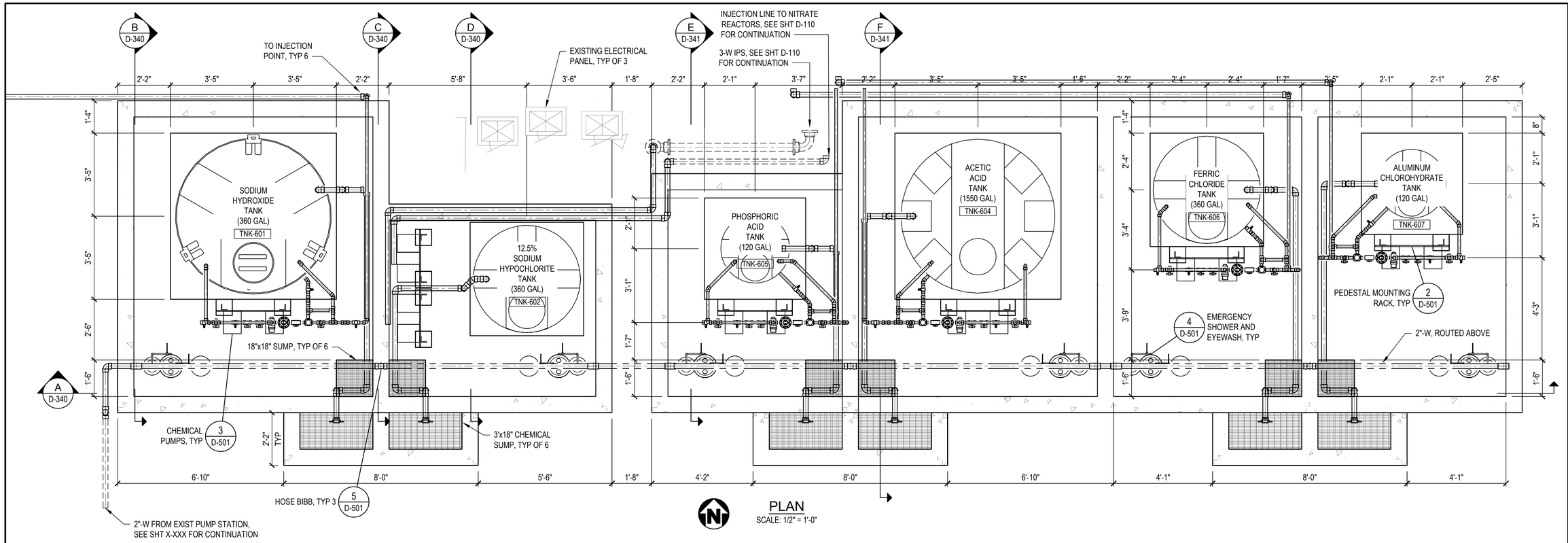

PLAN
SCALE: 1/2" = 1'-0"

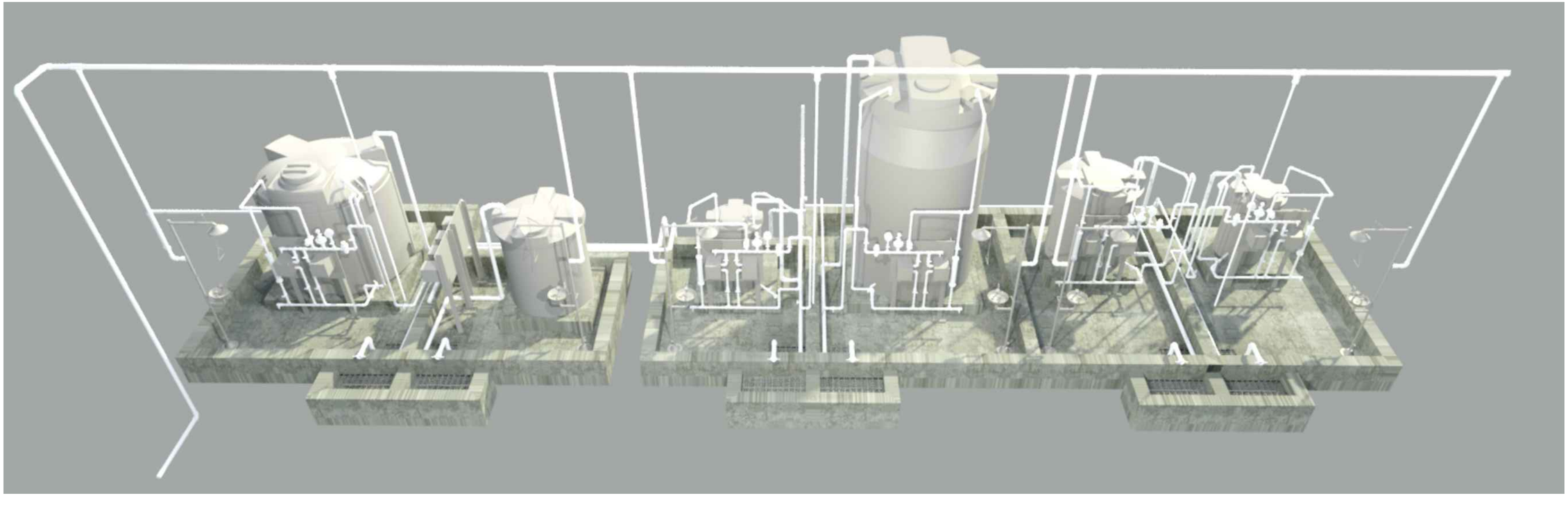

3D PERSPECTIVE
SCALE: NTS

consor

REVISIONS:			
NO	DATE	BY	DESCRIPTION
A	10/3/25	FT	30% SUBMITTAL
B	12/12/25	FT	60% SUBMITTAL
C	03/03/26	FT	90% SUBMITTAL

The installation shown is to be installed in accordance with the Arizona Water Company standard specifications on file with the Arizona Department of Environmental Quality

Revised drawings are to at least one full working day prior to scheduled construction

W.A. No.:
SYSTEM:
LEGAL DESC.:
TAX DIST.:
P.E. No.:
SBB No.:
DATE: 03/03/2026
SCALE: AS SHOWN
DRAWN BY: JLC
REVIEWED BY: SDC
CHECKED BY: FHT

ARIZONA WATER COMPANY
3805 N. BLACK CANYON HWY. POST OFFICE BOX 29006
PHOENIX, ARIZONA 85038-9006
(602) 240-6860

PROJECT DESC: STANFIELD GWS&T USBR GRANT COORDINATION
PROJECT SHEET DESC: TREATMENT CHEMICAL SYSTEM ENLARGED PLAN

DWG. No.: D-140
SHEET 36 OF 80

Drawing Path and Name: C:\Users\jared.cloud\DC\ACCDocs\Consor\Stanfield GWS&T USBR Grant Coordination\Project Files\1-Design\07-PROC\2-SHEETS\W242167AZ.00_D-140.dwg, Plotted Date: March 9, 2026 1:24 PM By: Jared Cloud

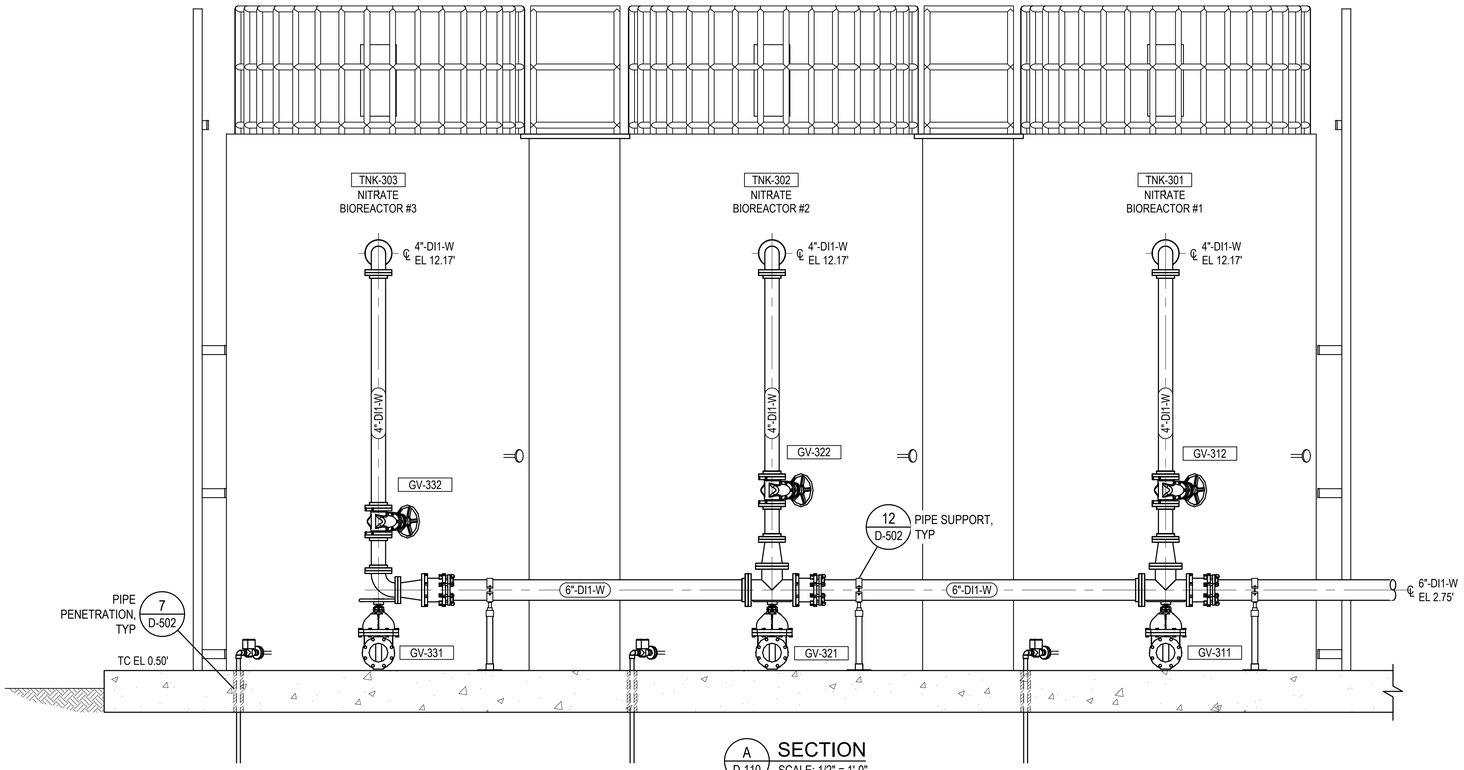

A D-110 SECTION
SCALE: 1/2" = 1'-0"

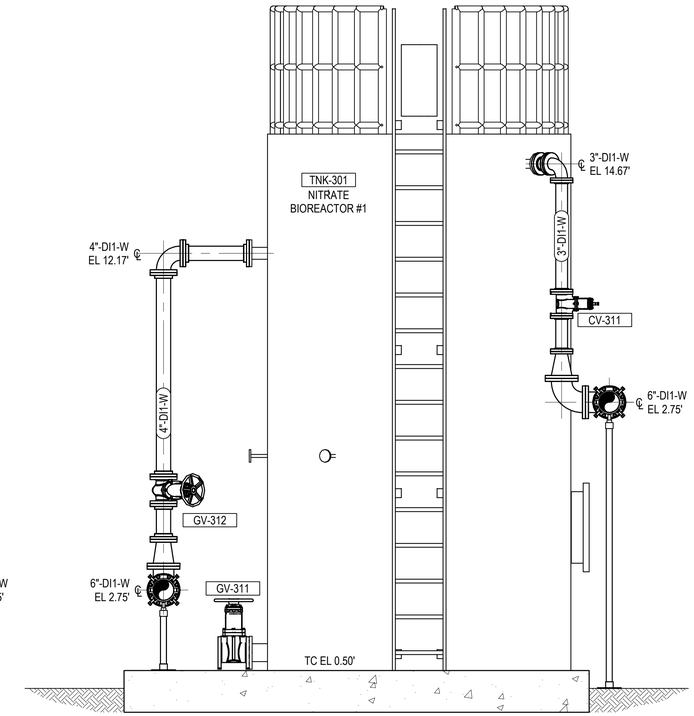

B D-110 SECTION
SCALE: 1/2" = 1'-0"

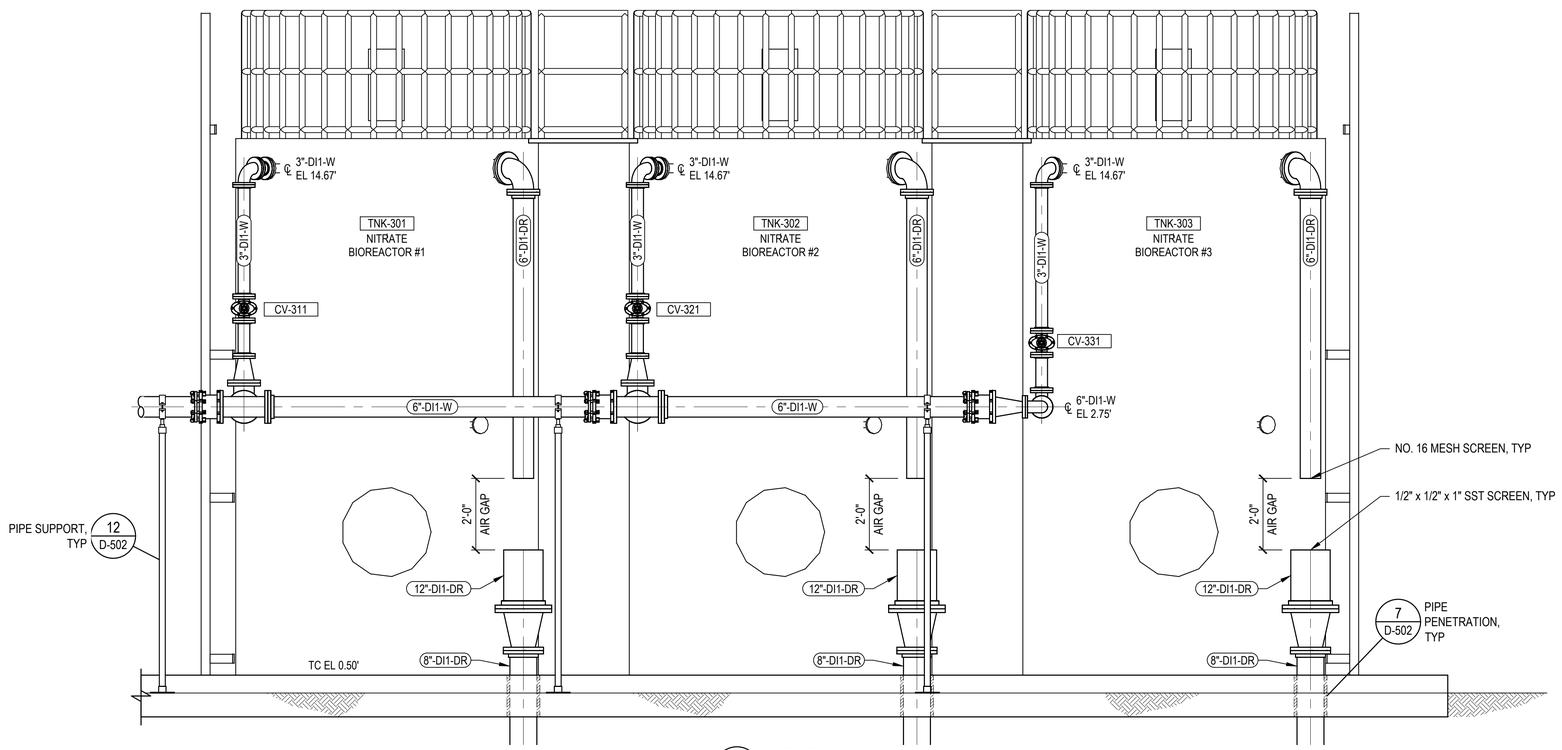

C D-110 SECTION
SCALE: 1/2" = 1'-0"

REVISIONS:

NO	DATE	BY	DESCRIPTION
A	10/3/25	FT	30% SUBMITTAL
B	12/12/25	FT	60% SUBMITTAL
C	03/03/26	FT	90% SUBMITTAL

The installation shown is to be installed in accordance with the Arizona Water Company standard specifications on file with the Arizona Department of Environmental Quality

Revised clearance 6"/1 or least size tab
existing, field verify, and adjust as required

W.A. No.:
P.E. No.:
SYSTEM#:
LEGAL DESC.:
TAX DIST.:
SIB No.:
DATE: 03/03/2026
SCALE: AS SHOWN
DRAWN BY: JLC
REVIEWED BY: SDC
CHECKED BY: FHT

ARIZONA WATER COMPANY
3805 N. BLACK CANYON HWY. POST OFFICE BOX 29006
PHOENIX, ARIZONA 85038-9006
(602) 240-6860

PROJECT DESC: STANFIELD GWS&T USBR GRANT COORDINATION
PROJECT SHEET DESC: NITRATE TREATMENT SYSTEM SECTIONS

consor

DWG. No.: D-310
SHEET 37 OF 79

Drawing Path and Name: C:\Users\jared.cloud\DC\ACCDocs\Consor\Stanfield GWS&T USBR Grant Coordination\Project Files\1-Design\07-PROC\2-SHEETS\W242167AZ.00_D-310-311.dwg, Plotted Date: March 9, 2026 9:44 AM By: Jared Cloud

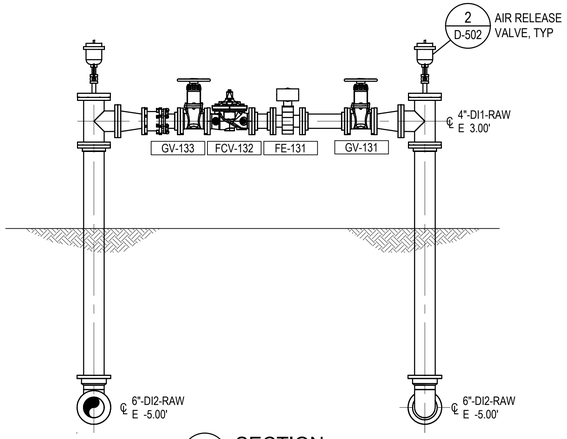

D / D-110 SECTION
SCALE: 1/2" = 1'-0"

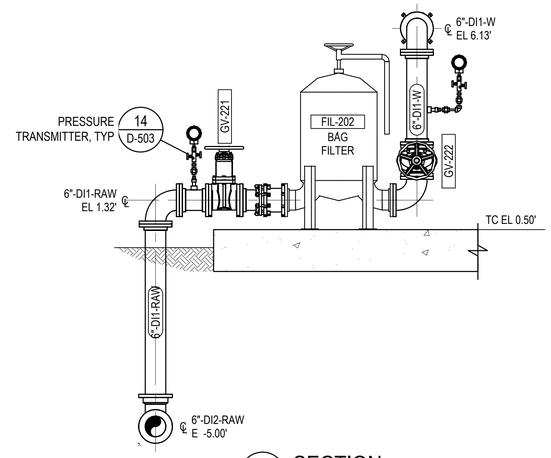

E / D-110 SECTION
SCALE: 1/2" = 1'-0"

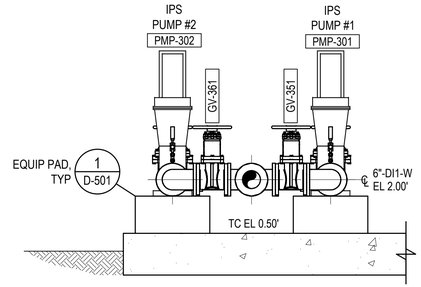

F / D-110 SECTION
SCALE: 1/2" = 1'-0"

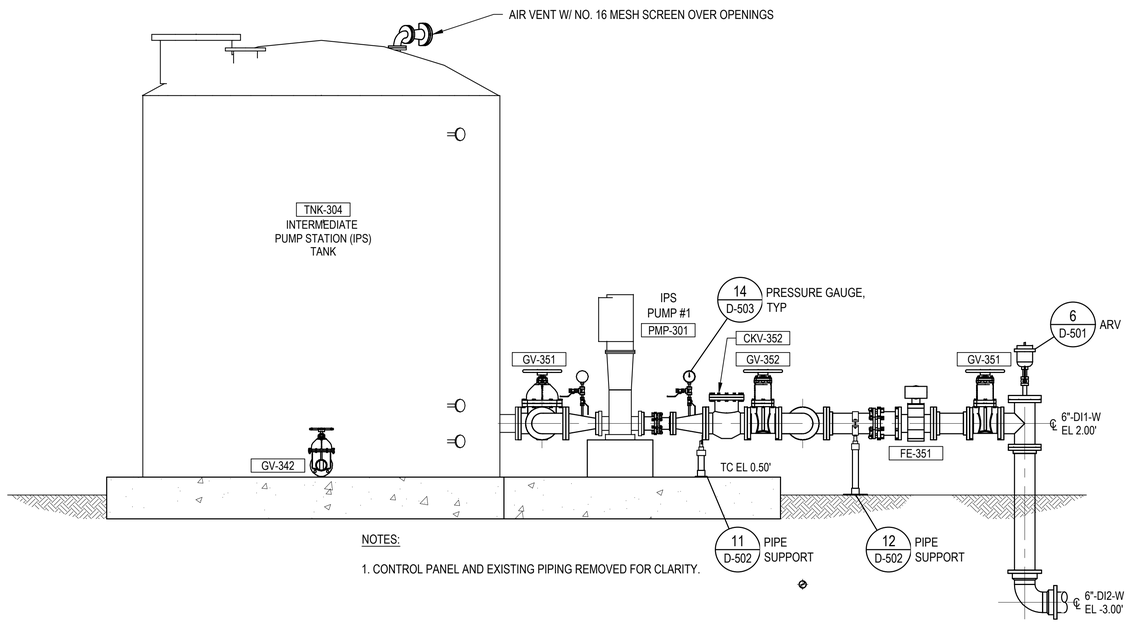

NOTES:

1. CONTROL PANEL AND EXISTING PIPING REMOVED FOR CLARITY.

G / D-110 SECTION
SCALE: 1/2" = 1'-0"

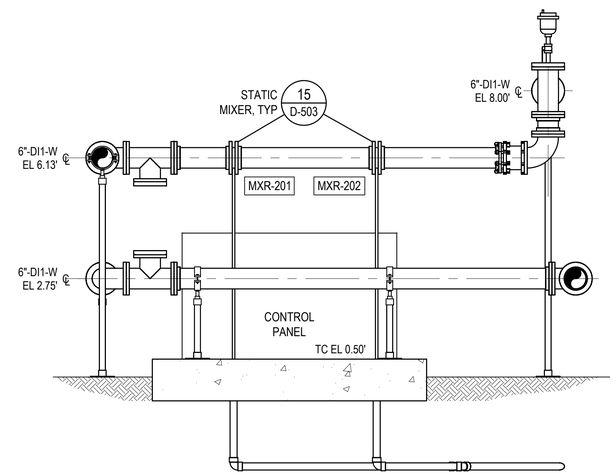

H / D-110 SECTION
SCALE: 1/2" = 1'-0"

REVISIONS:

NO	DATE	BY	DESCRIPTION
A	10/31/25	FT	30% SUBMITTAL
B	12/12/25	FT	60% SUBMITTAL
C	03/03/26	FT	90% SUBMITTAL

The installation shown is to be installed in accordance with the Arizona Water Company standard specifications on file with the Arizona Department of Environmental Quality

Revised Arizona 811 at least one full working day prior to start of excavation

Call 811 or other (Arizona811.com)

W.A. No.:
P.E. No.:
SYSTEM:
LEGAL DESC.:
TAX DIST.:
SIB No.:
DATE: 03/03/2026
SCALE: AS SHOWN
DRAWN BY: JLC
REVIEWED BY: SDC
CHECKED BY: FHT

ARIZONA WATER COMPANY
3805 N. BLACK CANYON HWY. POST OFFICE BOX 29006
PHOENIX, ARIZONA 85038-9006
(602) 240-6860

PROJECT DESC: STANFIELD GWS&T USBR GRANT COORDINATION

PROJECT SHEET DESC: NITRATE TREATMENT SYSTEM SECTIONS

consor

DWG. No.: D-311

SHEET 38 OF 79

Drawing Path and Name: C:\Users\jared.cloud\DC\ACCDocs\Consor\Stanfield GWS&T USBR Grant Coordination\Project Files\1-Design\07-PROC\2-SHEETS\W242167AZ.00_D-310-311.dwg, Plotted Date: March 9, 2026 9:59 AM By: Jared Cloud

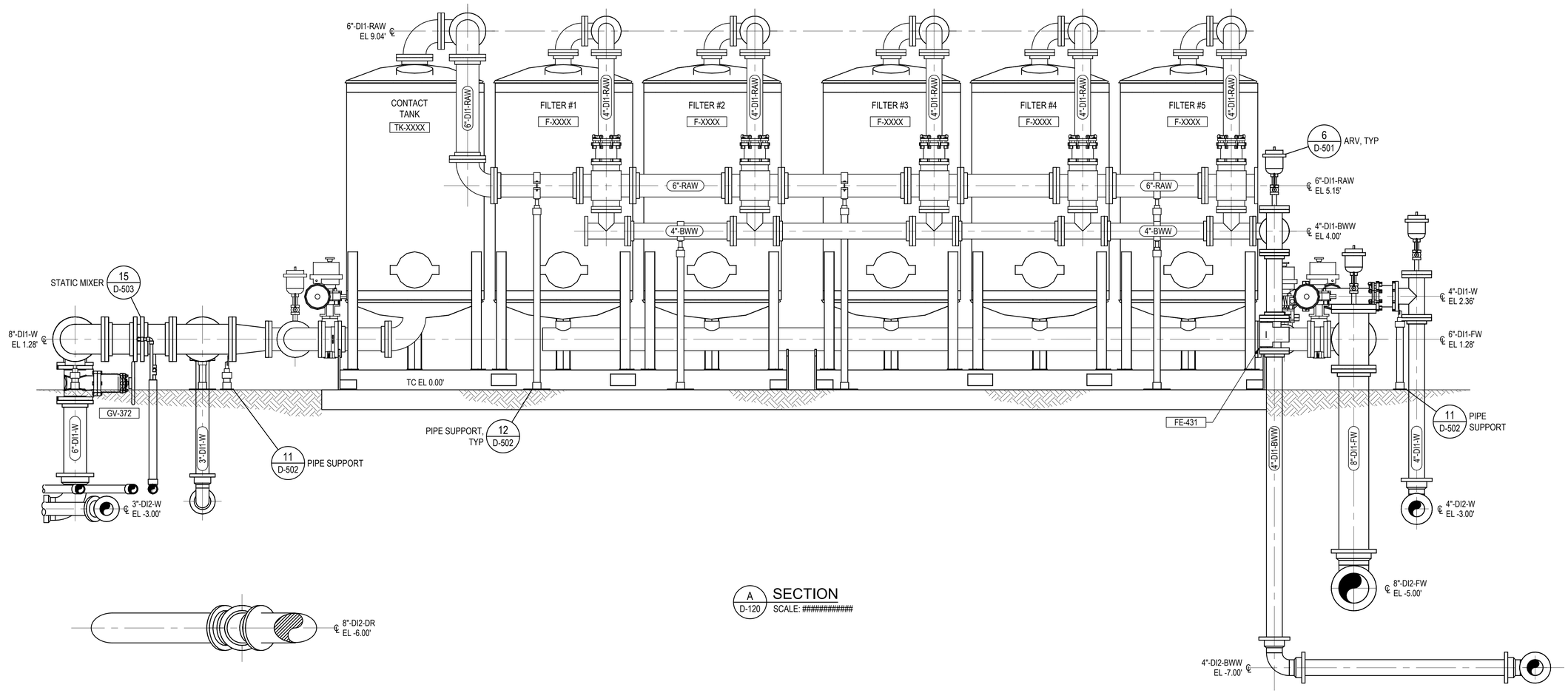

A / D-120 SECTION
SCALE: ##########

REVISIONS:

NO	DATE	BY	DESCRIPTION
A	10/3/25	FT	30% SUBMITTAL
B	12/12/25	FT	60% SUBMITTAL
C	03/03/26	FT	90% SUBMITTAL

The installation shown is to be installed in accordance with the Arizona Water Company standard specifications on file with the Arizona Department of Environmental Quality

Blue Stake, Inc. 602 263-1100
(Will NOT locate other underground facilities)

W.A. No.:
P.E. No.:
SYSTEM:
LEGAL DESC.:
TAX DIST.:
SIB No.:
DATE: 03/03/2026
SCALE: AS SHOWN
DRAWN BY: JLC
REVIEWED BY: SDC
CHECKED BY: FHT

ARIZONA WATER COMPANY
3805 N. BLACK CANYON HWY. POST OFFICE BOX 29006
PHOENIX, ARIZONA 85038-9006
(602) 240-6860

PROJECT DESC: STANFIELD GWS&T USBR GRANT COORDINATION
PROJECT SHEET DESC: ARSENIC TREATMENT FILTRATION SYSTEM
SECTIONS

consor

DWG. No.: D-320

SHEET 39 OF 79

Drawing Path and Name: C:\Users\jared.cloud\DC\ACCDocs\Consor\Stanfield GWS&T USBR Grant Coordination\Project Files\1-Design\07-PROC\2-SHEETS\W242167AZ.00_D-320-321.dwg, Plotted Date: March 9, 2026 10:07 AM By: Jared Cloud

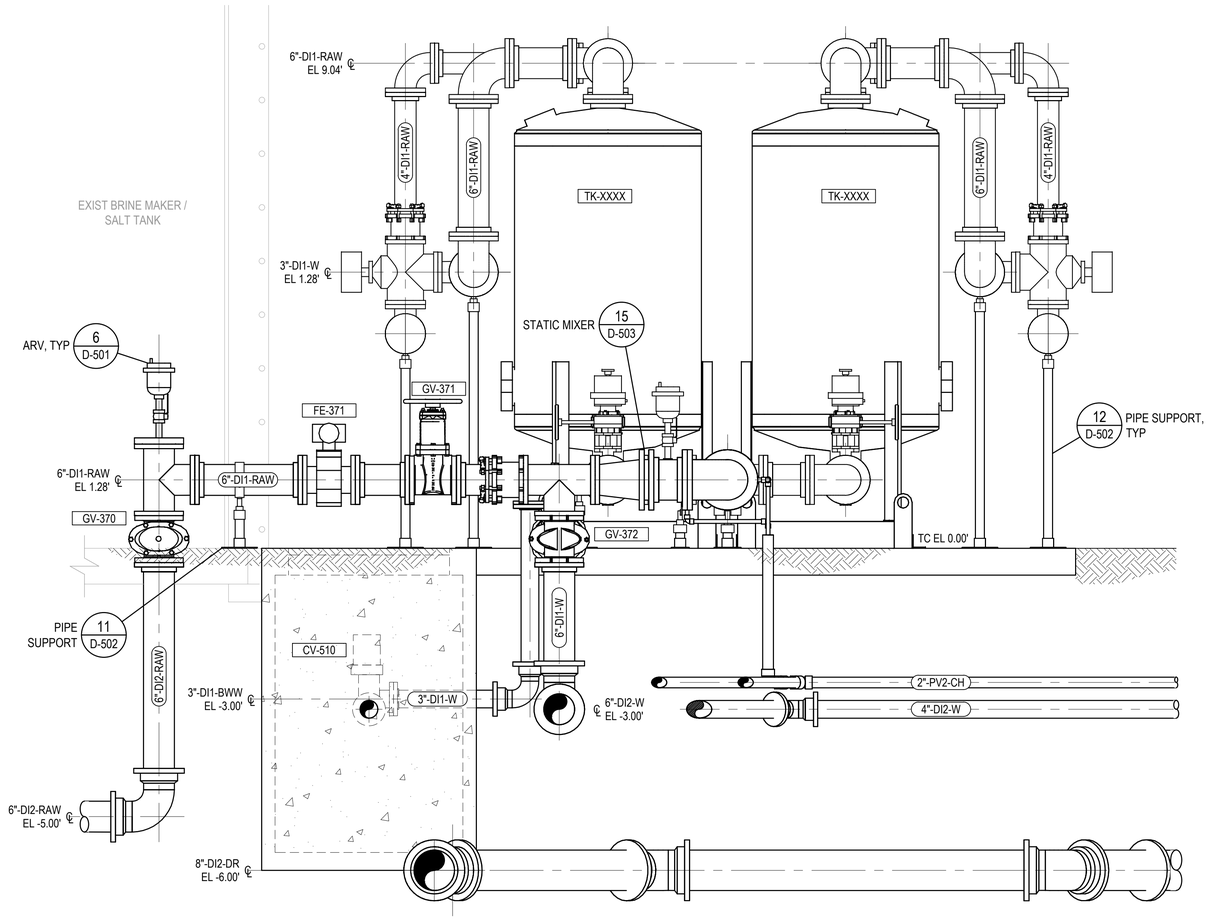

B D-120 SECTION
SCALE: 3/4" = 1'-0"

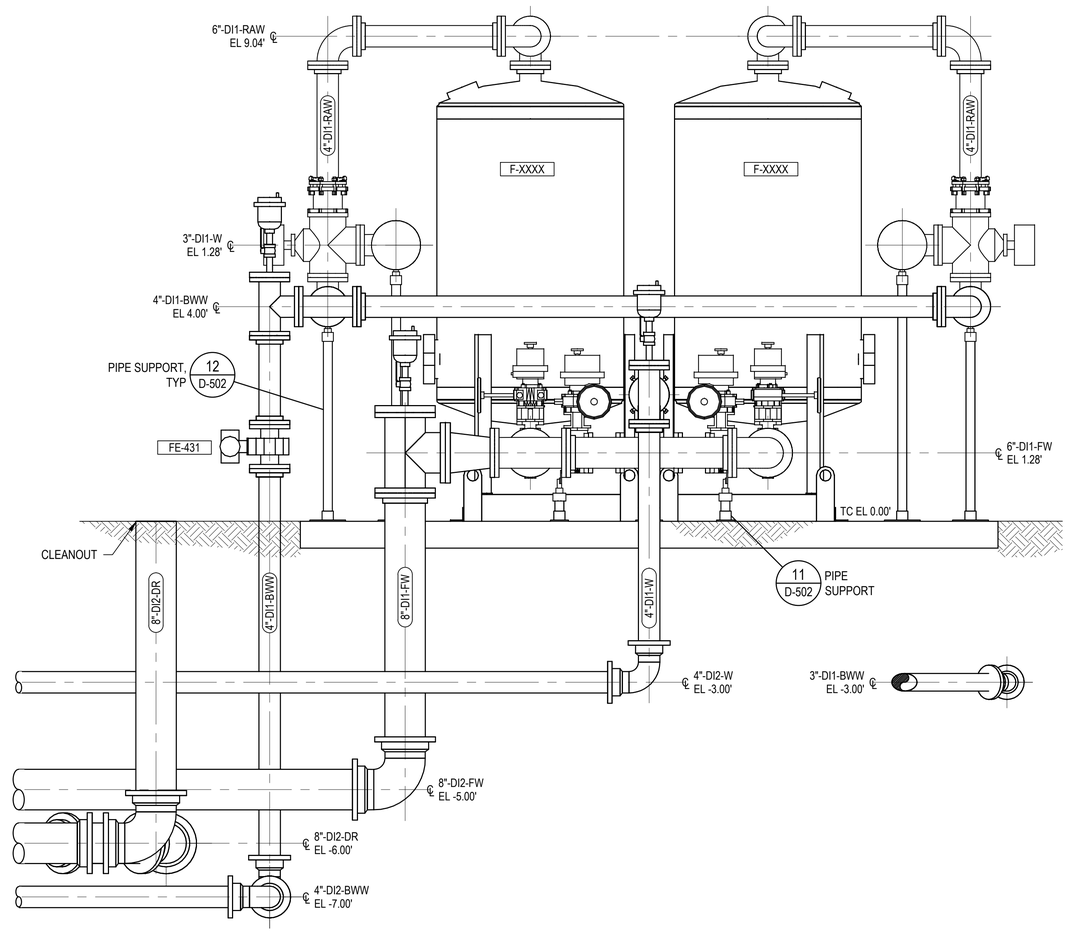

C D-120 SECTION
SCALE: 3/4" = 1'-0"

REVISIONS:

NO	DATE	BY	DESCRIPTION
A	10/3/25	FT	30% SUBMITTAL
B	12/12/25	FT	60% SUBMITTAL
C	03/03/26	FT	90% SUBMITTAL

The installation shown is to be installed in accordance with the Arizona Water Company standard specifications on file with the Arizona Department of Environmental Quality

Revised drawings 811 at least one full working day before you begin work.
Call 811 or visit azbluestake.com

W.A. No.:
P.E. No.:
SYSTEM:
LEGAL DESC.:
TAX DIST.:
SIB No.:
SCALE: AS SHOWN
DATE: 03/03/2026
REVIEWED BY: SDC
CHECKED BY: FHT
DRAWN BY: JLC

ARIZONA WATER COMPANY
3805 N. BLACK CANYON HWY. POST OFFICE BOX 29006
PHOENIX, ARIZONA 85038-9006
(602) 240-6860

PROJECT DESC: STANFIELD GWS&T USBR GRANT COORDINATION

PROJECT SHEET DESC: W24216 7AZ.00 SUBTASK 255 STANFIELD GROUNDWATER SUPPLY AND TREATMENT

consor

DWG. No.: D-321

Drawing Path and Name: C:\Users\jared.cloud\DC\ACCDocs\Consor\Stanfield GWS&T USBR Grant Coordination\Project Files\1-Design\07-PROC\2-SHEETS\W242167AZ.00_D-320-321.dwg, Plotted Date: March 9, 2026 10:07 AM By: Jared Cloud

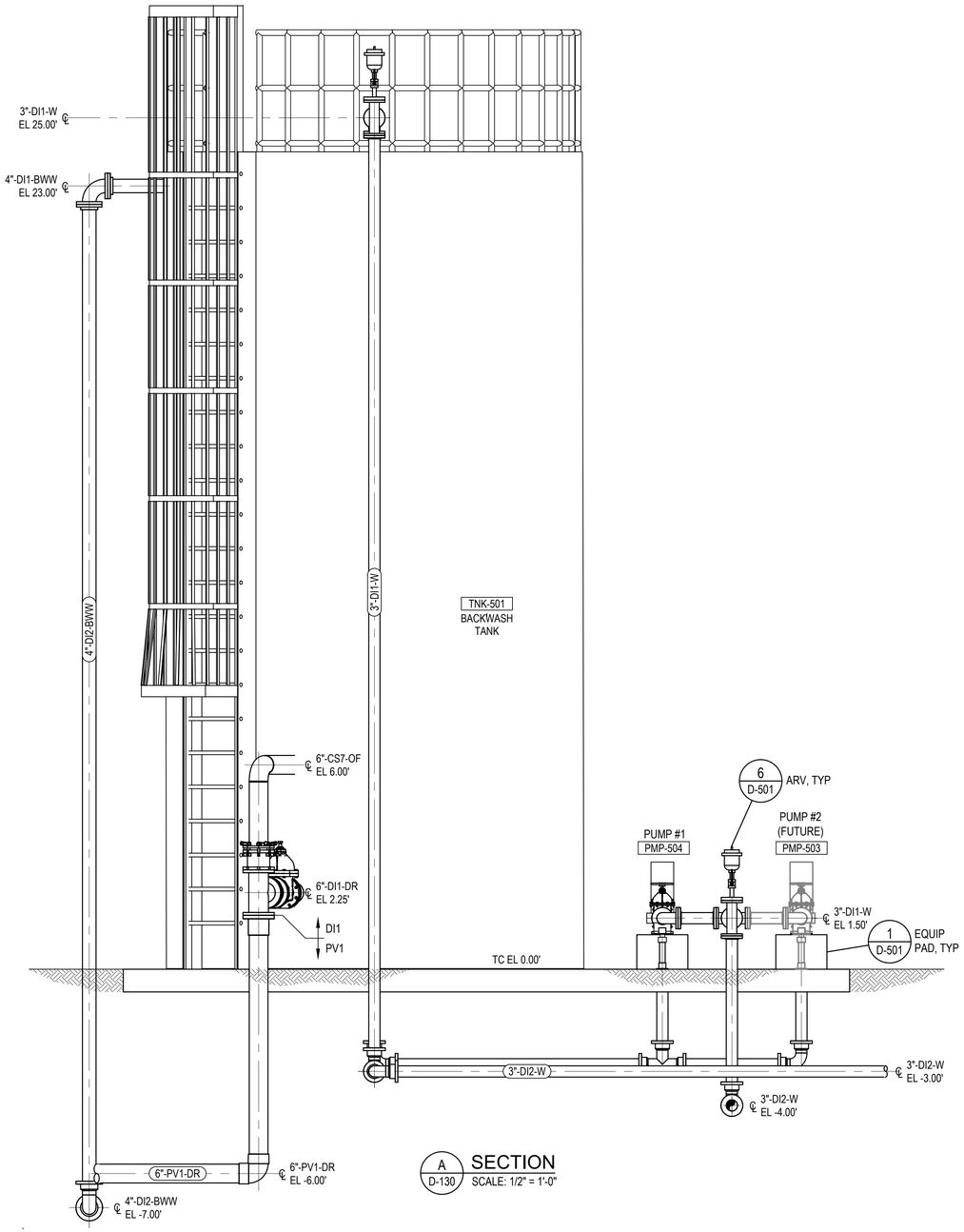

A D-130 SECTION
SCALE: 1/2" = 1'-0"

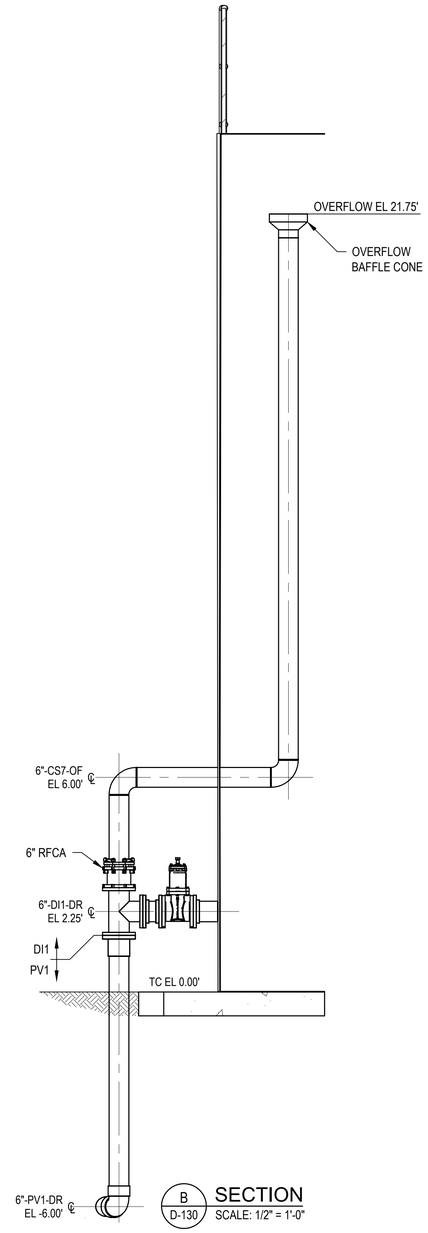

B D-130 SECTION
SCALE: 1/2" = 1'-0"

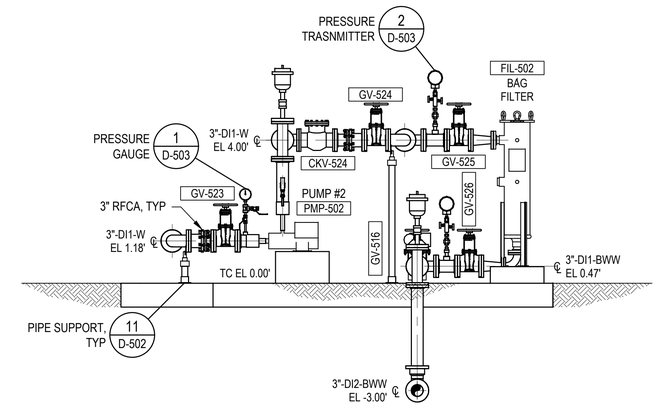

C D-130 SECTION
SCALE: 1/2" = 1'-0"

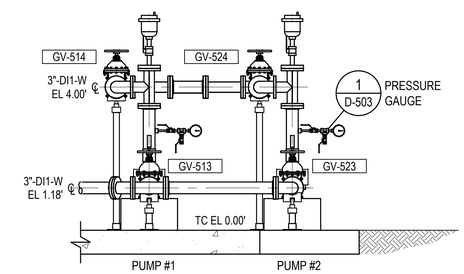

D D-130 SECTION
SCALE: 1/2" = 1'-0"

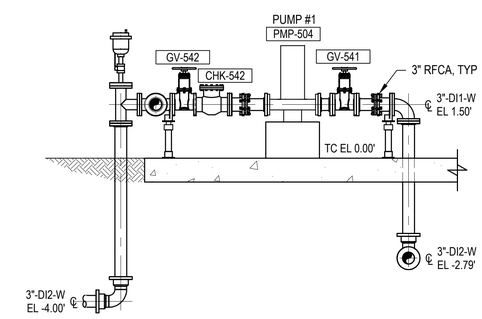

E D-130 SECTION
SCALE: 1/2" = 1'-0"

REVISIONS:

NO	DATE	BY	DESCRIPTION
A	10/3/25	FT	30% SUBMITTAL
B	12/12/25	FT	60% SUBMITTAL
C	03/03/26	FT	90% SUBMITTAL

The installation shown is to be installed in accordance with the Arizona Water Company standard specifications on file with the Arizona Department of Environmental Quality

Revised as-builts are to be made into redline drawings and submitted to ADEQ

W.A. No.:
P.E. No.:
SYSTEM:
LEGAL DESC.:
TAX DIST.:
SIB No.:
DATE: 03/03/2026
SCALE: AS SHOWN
DRAWN BY: JLC
REVIEWED BY: SDC
CHECKED BY: FHT

ARIZONA WATER COMPANY
3805 N. BLACK CANYON HWY. POST OFFICE BOX 29006
PHOENIX, ARIZONA 85038-9006
(602) 240-6860

PROJECT DESC: STANFIELD GWS&T USBR GRANT COORDINATION
PROJECT SHEET DESC: BACKWASH TANK SECTIONS

consor

DWG. No.: D-330
SHEET 41 OF 79

Drawing Path and Name: C:\Users\jared.cloud\DC\ACCDocs\Consor\Stanfield GWS&T USBR Grant Coordination\Project Files\1-Design\07-PROC\2-SHEETS\W242167AZ.00_D-330-331.dwg, Plotted Date: March 5, 2026 1:08 PM By: Jared Cloud

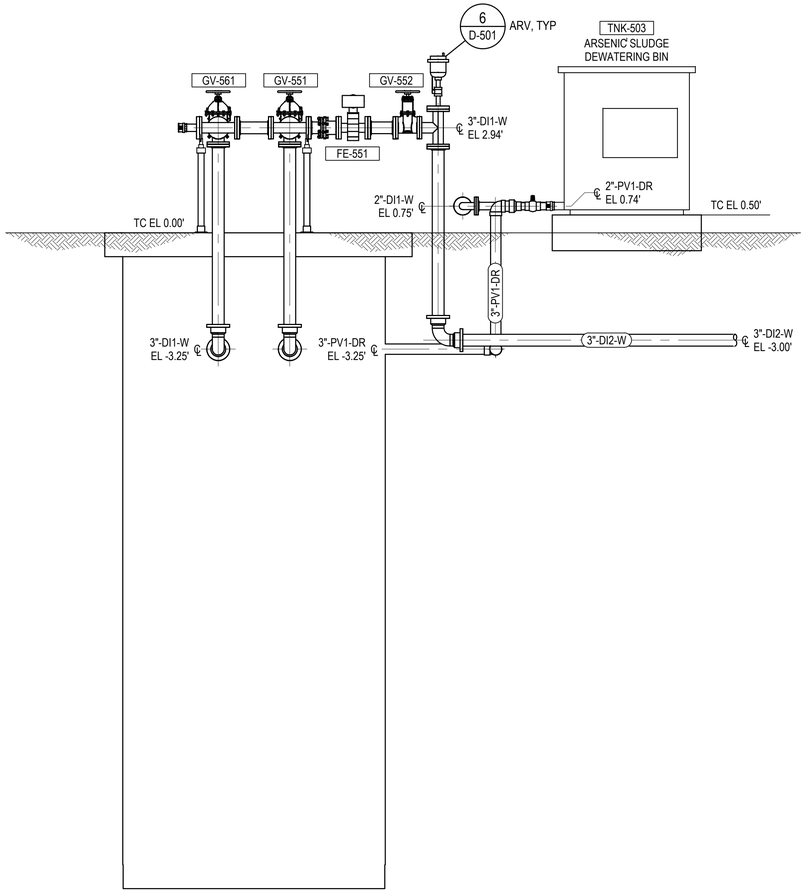

F
D-130
SECTION
SCALE: 1/2" = 1'-0"

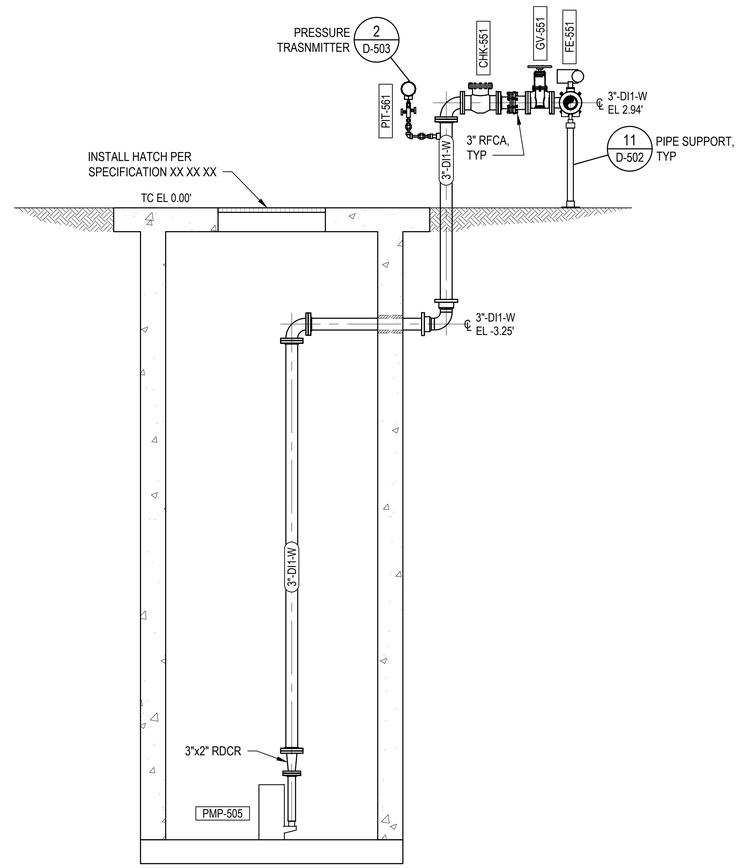

G
D-130
SECTION
SCALE: 1/2" = 1'-0"

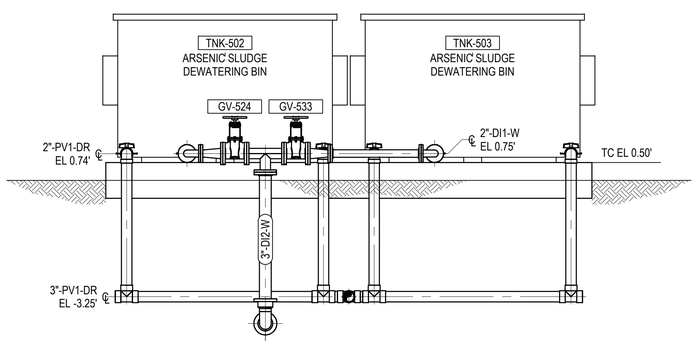

H
D-130
SECTION
SCALE: 1/2" = 1'-0"

REVISIONS:

NO	DATE	BY	DESCRIPTION
A	10/3/25	FT	30% SUBMITTAL
B	12/12/25	FT	60% SUBMITTAL
C	03/03/26	FT	90% SUBMITTAL

The installation shown is to be installed in accordance with the Arizona Water Company standard specifications on file with the Arizona Department of Environmental Quality

Sunset Arizona 811 at least one full working days before you begin excavation
ARIZONA
Call 811 or attach Arizona811.com

W.A. No.:
P.E. No.:
SYSTEM:
LEGAL DESC.:
TAX DIST.:
SIB No.:
DATE: 03/03/2026
SCALE: AS SHOWN
DRAWN BY: JLC
REVIEWED BY: SDC
CHECKED BY: FHT

ARIZONA WATER COMPANY
3805 N. BLACK CANYON HWY. POST OFFICE BOX 29006
PHOENIX, ARIZONA 85038-9006
(602) 240-6860

PROJECT DESC: STANFIELD GWS&T USBR GRANT COORDINATION
PROJECT SHEET DESC: SLUDGE DEWATERING SECTIONS

DWG. No.: D-331

consor

Drawing Path and Name: C:\Users\jared.cloud\DC\ACCDocs\Consor\Stanfield GWS&T USBR Grant Coordination\Project Files\1-Design\07-PROC\2-SHEETS\W242167AZ.00_D-330-331.dwg, Plotted Date: March 5, 2026 1:11 PM By: Jared Cloud

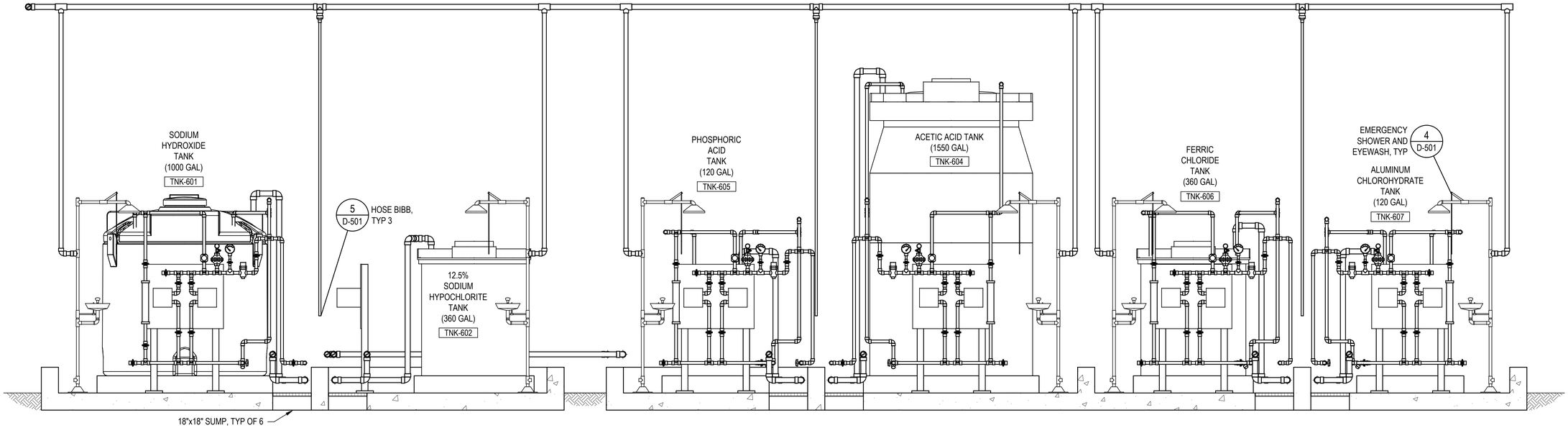

A D-140 SECTION
SCALE: 1/2" = 1'-0"

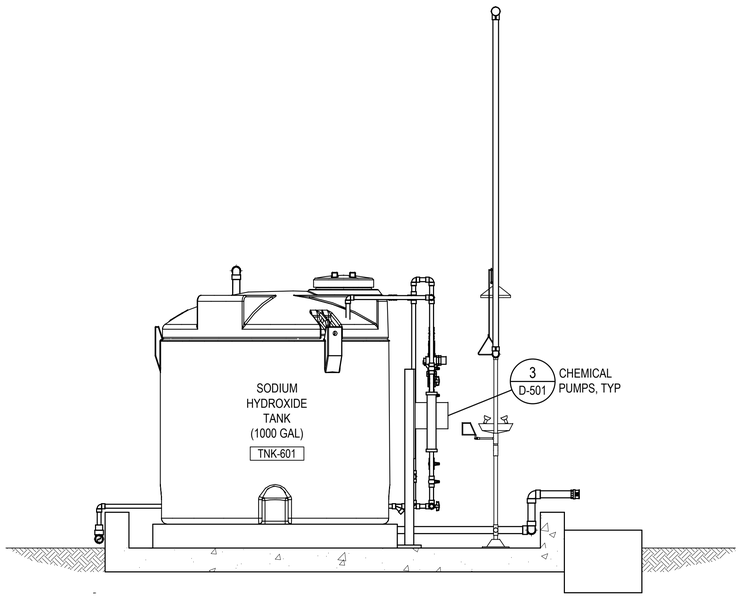

B D-140 SECTION
SCALE: 1/2" = 1'-0"

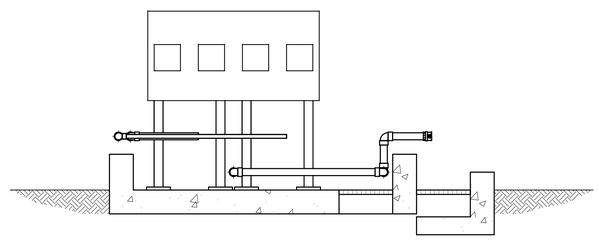

C D-140 SECTION
SCALE: 1/2" = 1'-0"

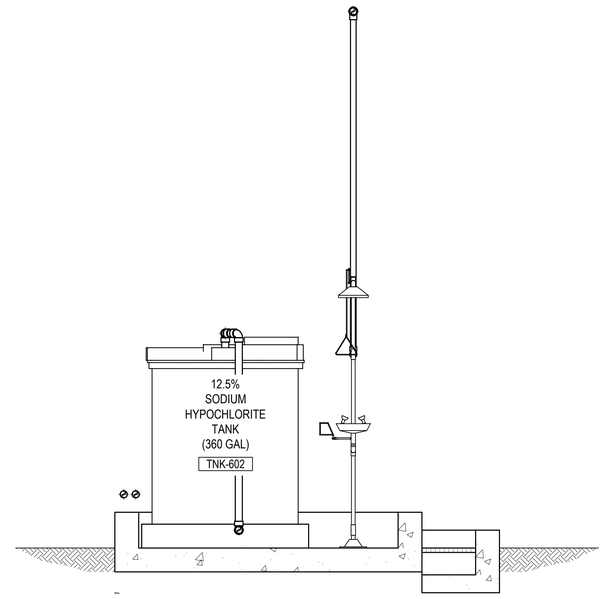

D D-140 SECTION
SCALE: 1/2" = 1'-0"

REVISIONS:

NO	DATE	BY	DESCRIPTION
A	10/31/25	FT	30% SUBMITTAL
B	12/12/25	FT	60% SUBMITTAL
C	03/03/26	FT	90% SUBMITTAL

The Installation shown is to be Installed in accordance with the Arizona Water Company standard specifications on file with the Arizona Department of Environmental Quality

Blue Stake, Inc. Call 8-1-1 or 1-800-782-5348 (602) 263-1100

W.A. No.:
P.E. No.:
SYSTEM:
LEGAL DESC.:
TAX DIST.:
SBI No.:
DATE: 03/03/2026
SCALE: AS SHOWN
DRAWN BY: JLC
REVIEWED BY: SDC
CHECKED BY: FHT

ARIZONA WATER COMPANY
3805 N. BLACK CANYON HWY. POST OFFICE BOX 29006
PHOENIX, ARIZONA 85038-9006
(602) 240-6860

PROJECT DESC: STANFIELD GWS&T USBR GRANT COORDINATION
PROJECT SHEET DESC: TREATMENT CHEMICAL SYSTEM SECTIONS

DWG. No.: D-340

SHEET 43 OF 80

consor

Drawing Path and Name: C:\Users\jared.cloud\DC\ACCDocs\Consor\Stanfield GWS&T USBR Grant Coordination\Project Files\1-Design\07-PROC\2-SHEETS\W242167AZ.00_D-340-341.dwg, Plotted Date: March 9, 2026 1:14 PM By: Jared Cloud

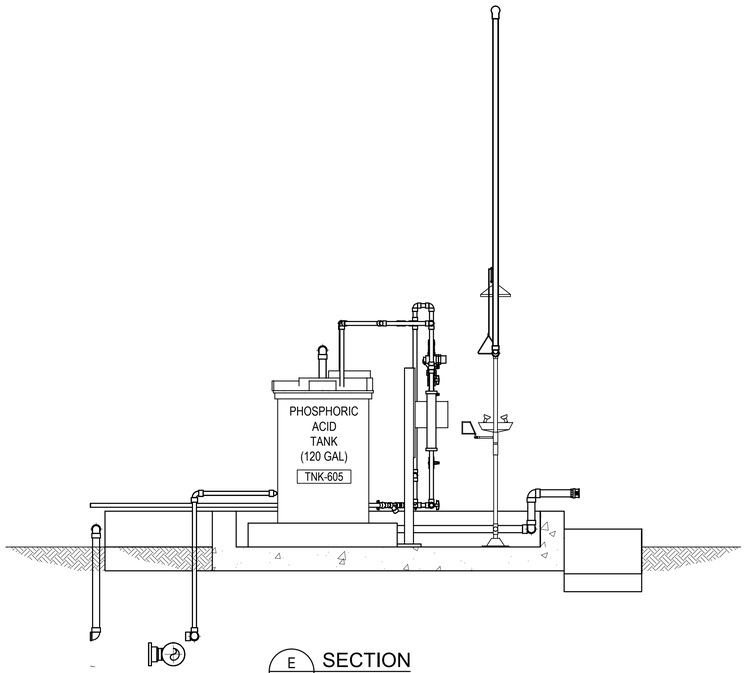

E
D-140
SECTION
SCALE: 1/2" = 1'-0"

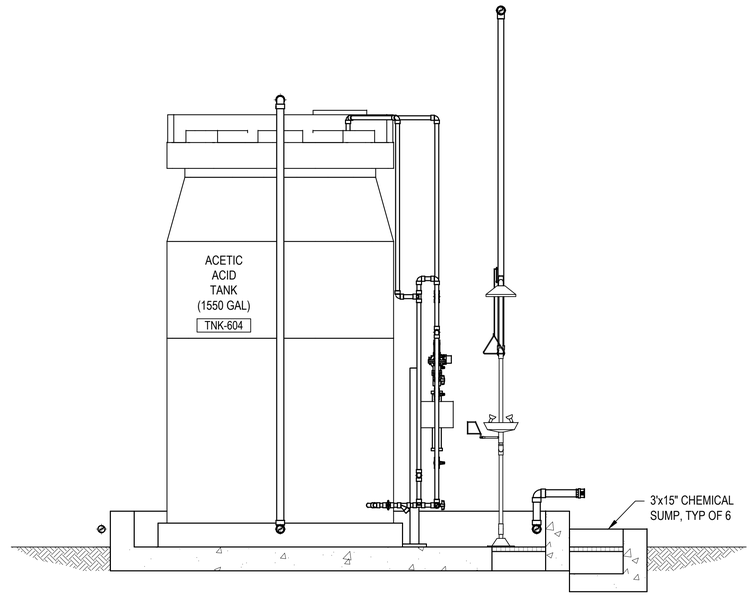

F
D-140
SECTION
SCALE: 1/2" = 1'-0"

REVISIONS:

NO	DATE	BY	DESCRIPTION
A	10/3/25	FT	30% SUBMITTAL
B	12/12/25	FT	60% SUBMITTAL
C	03/03/26	FT	90% SUBMITTAL

The installation shown is to be installed in accordance with the Arizona Water Company standard specifications on file with the Arizona Department of Environmental Quality

Sentinel Arizona 811 at least two full working days before you begin excavation
ARIZONA
Call 811 or attach Arizona811.com

W.A. No.:
P.E. No.:
SYSTEM:
LEGAL DESC.:
TAX DIST.:
SIB No.:
DATE: 03/03/2026
SCALE: AS SHOWN
DRAWN BY: JLC
REVIEWED BY: SDC
CHECKED BY: FHT

ARIZONA WATER COMPANY
3805 N. BLACK CANYON HWY. POST OFFICE BOX 29006
PHOENIX, ARIZONA 85038-9006
(602) 240-6860

PROJECT DESC: STANFIELD GWS&T USBR GRANT COORDINATION

PROJECT SHEET DESC: TREATMENT CHEMICAL SYSTEM SECTIONS

DWG. No.: D-341

SHEET 44 OF 80

consor

Drawing Path and Name: C:\Users\jared.cloud\DC\ACCDocs\Consor\Stanfield GWS&T USBR Grant Coordination\Project Files\1-Design\07-PROC\2-SHEETS\W242167AZ.00_D-340-341.dwg, Plotted Date: March 9, 2026 1:14 PM By: Jared Cloud

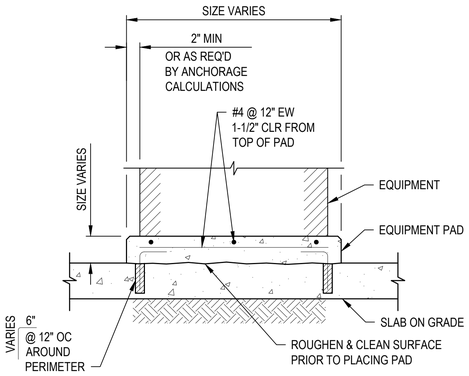

NOTE:

1. DRILL AND EPOXY TO SLAB WITH HILTI HIT-RE 500-SD EPOXY, 6" EMBEDMENT.

1 EQUIPMENT PAD ON SLAB
SCALE: NTS

NOTES:

1. PROVIDE A MINIMUM OF TWO PEDESTAL MOUNTED SUPPORTS.
2. MOUNTING PLATES SHALL BE 2" GREATER ON EACH SIDE THAN DIMENSION OF THE EQUIPMENT AND PIPING MOUNTED TO IT. ROUND ALL CORNERS AND EDGES.
3. ANCHOR PLATE TO ANGLE POST WITH 3/8"Ø STAINLESS STEEL FASTENERS.

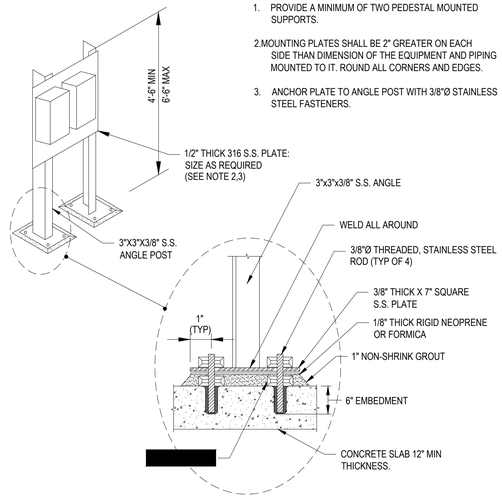

2 PEDESTAL MOUNTING RACK
SCALE: NTS

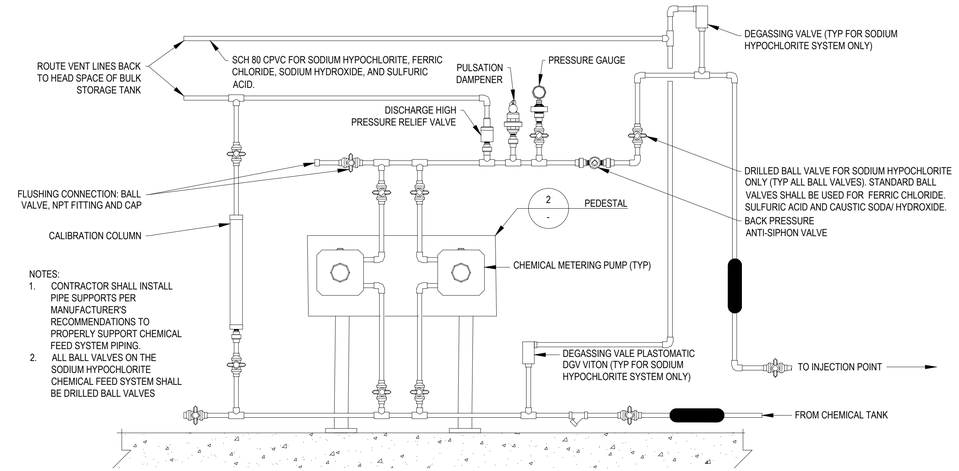

NOTES:

1. CONTRACTOR SHALL INSTALL PIPE SUPPORTS PER MANUFACTURER'S RECOMMENDATIONS TO PROPERLY SUPPORT CHEMICAL FEED SYSTEM PIPING.
2. ALL BALL VALVES ON THE SODIUM HYPOCHLORITE CHEMICAL FEED SYSTEM SHALL BE DRILLED BALL VALVES

3 CHEMICAL FEED PUMPS & PIPING
SCALE: NTS

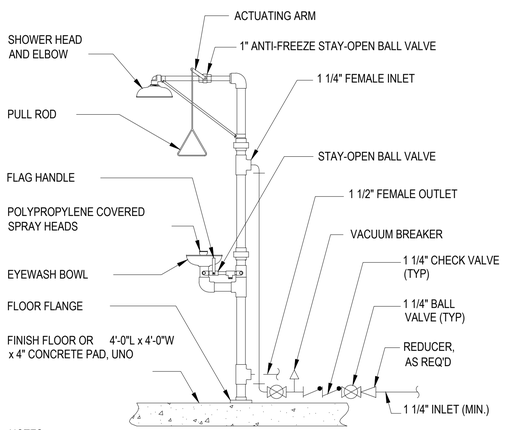

NOTES:

1. CONTRACTOR SHALL ROUTE EYEWASH DRAIN LINE TO NEAREST FLOOR DRAIN, TO BE APPROVED BY ENGINEER. FOR OUTSIDE INSTALLATION, CONTRACTOR SHALL DRAIN EYEWASH TO A 3'x3'x3' SUMP FILLED WITH 1/2" PEA GRAVEL.
2. ALL EYEWASHES SHALL BE EQUIPPED WITH ANTI-SCALD FEATURE.
3. INSULATE PIPING AND FITTINGS.
4. INSTALL FLOW SWITCH AND ALARM BEACON/HORN.
5. ANIT-FREEZE VALVE TO BE INCLUDED

4 EMERGENCY EYEWASH AND SHOWER
SCALE: NTS

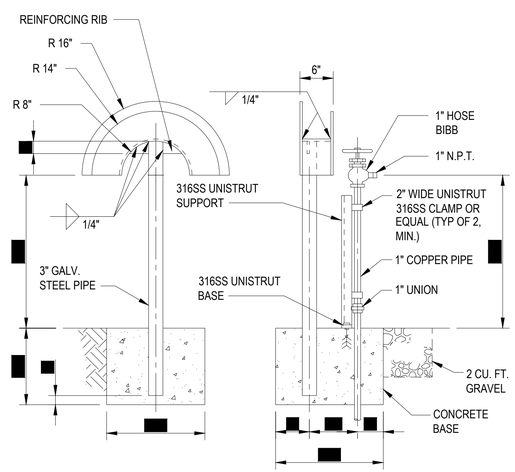

NOTES:

1. CONSTRUCT RACK OF 3/16" STEEL PLATE, ROUND ALL EDGES SMOOTH.
2. HOT DIP GALVANIZE RACK AFTER FABRICATION PER ASTM A-153.

5 HOSE BIBB
SCALE: NTS

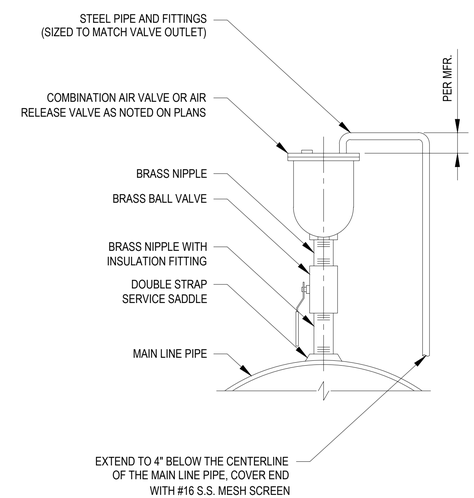

6 ARV
SCALE: NTS

REVISIONS:

NO	DATE	BY	DESCRIPTION
A	10/3/25	FT	30% SUBMITTAL
B	12/12/25	FT	60% SUBMITTAL
C	03/03/26	FT	90% SUBMITTAL

The installation shown is to be installed in accordance with the Arizona Water Company standard specifications on file with the Arizona Department of Environmental Quality

Revised as-builts are BY or based upon field verified dimensions, field changes, and other information

Built BY or other DESIGNATION

W.A. No.:
P.E. No.:
SYSTEM:
LEGAL DESC.:
TAX DIST.:
SIB No.:
DATE: 03/03/2026
SCALE: AS SHOWN
DRAWN BY: JLC
REVIEWED BY: SDC
CHECKED BY: FHT

ARIZONA WATER COMPANY
3805 N. BLACK CANYON HWY. POST OFFICE BOX 29006
PHOENIX, ARIZONA 85038-9006
(602) 240-6860

PROJECT DESC.: STANFIELD GWS&T USBR GRANT COORDINATION
PROJECT SHEET DESC.: PROCESS DETAILS

consor

DWG. No.: D-501
SHEET 45 OF 79

Drawing Path and Name: C:\Users\jared.cloud\DC\ACCDocs\Consor\Stanfield GWS&T USBR Grant Coordination\Project Files\1-Design\07-PROC\2-SHEETS\W242167AZ.00_D-DETAILS.dwg, Plotted Date: March 5, 2026 1:16 PM By: Jared Cloud

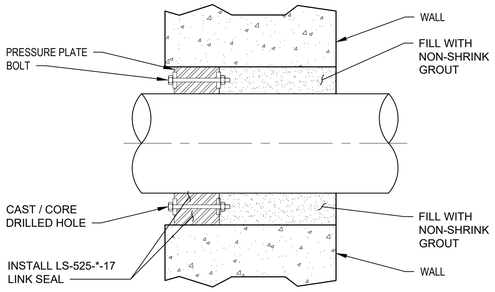

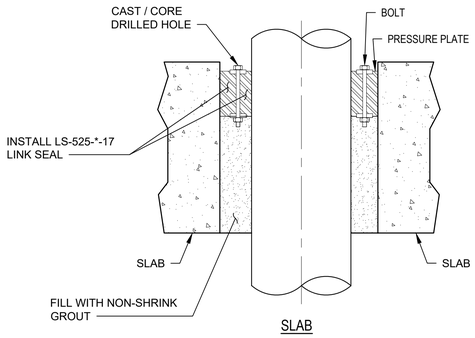

7 - PIPE PENETRATION
SCALE: NTS

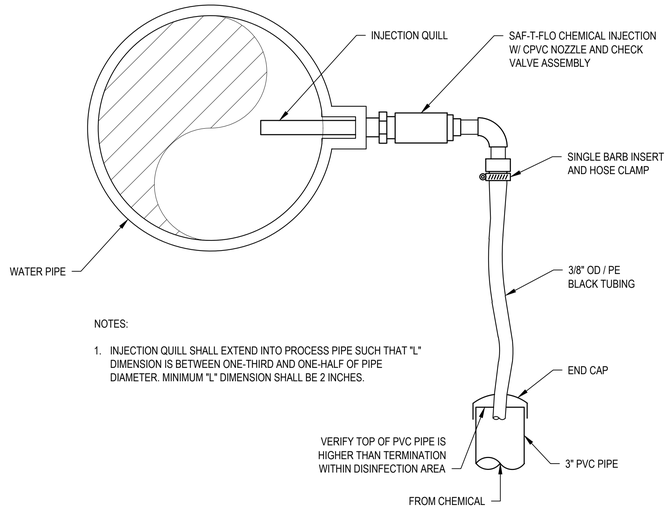

NOTES:

1. INJECTION QUILL SHALL EXTEND INTO PROCESS PIPE SUCH THAT "L" DIMENSION IS BETWEEN ONE-THIRD AND ONE-HALF OF PIPE DIAMETER. MINIMUM "L" DIMENSION SHALL BE 2 INCHES.

8 - INJECTION NOZZLE
SCALE: NTS

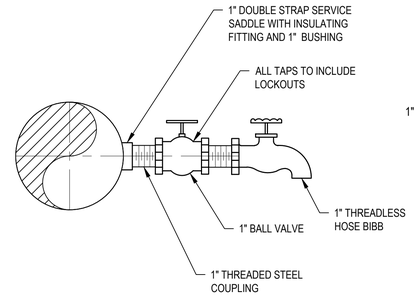

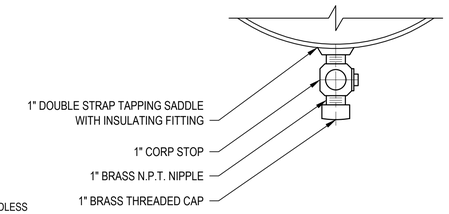

NOTES:

1. LOCATE DRAIN PORT ON THE BOTTOM OF PIPE UNLESS OTHERWISE SHOWN ON PLANS.

9 - SAMPLE TAP & DRAIN PORT
SCALE: NTS

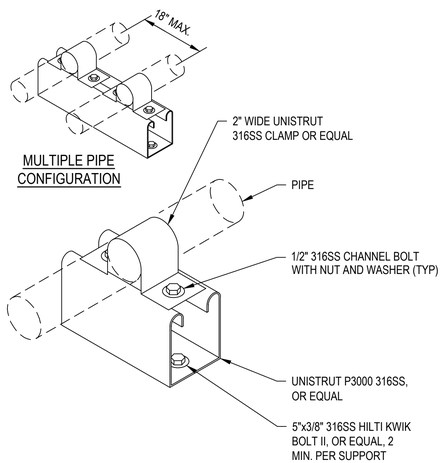

10 - PIPE SUPPORT
SCALE: NTS

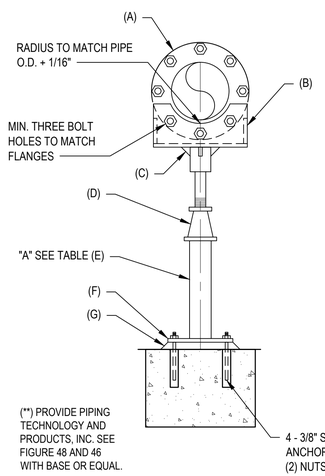

NOTES:

A. PIPE FLANGE, SEE MECHANICAL PLANS.
B. 1/2" STEEL PLATE.
C. 4 STEEL GUSSET PLATES EQUALLY SPACED AT 1-1/4" x 1-1/4" x 1/2" THICK.
D. ADJUSTABLE PIPE SUPPORT, GRINNELL FIG 264 OR EQUAL.
E. STEEL PIPE. SEE TABLE PROVIDED. 1/2" STEEL PLATE. SEE TABLE PROVIDED.
F. 1" NON-SHRINK LEVELING GROUT, AS REQUIRED.

11 - PIPE SUPPORT & FLANGE
SCALE: NTS

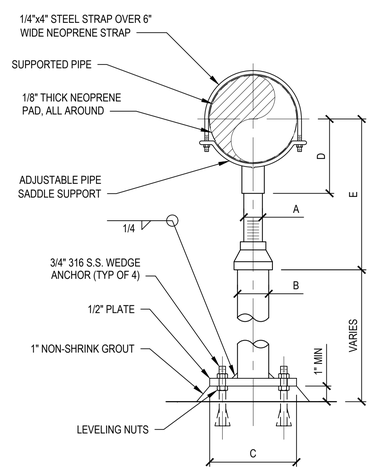

DIMENSION TABLE						
PIPE SIZE	A	B	C	D	E	
					MIN.	MAX.
2 1/2	1 1/2	2 1/2	9	3 1/2	8	13
3	1 1/2	2 1/2	9	3 3/4	8 1/4	13 1/4
3 1/2	1 1/2	2 1/2	9	4	8 1/2	13 1/2
4	2 1/2	3	9	4 1/4	9 1/4	14
5	2 1/2	3	9	4 7/8	10	14 3/4
6	2 1/2	3	9	5 1/2	10 1/2	15 1/4
8	2 1/2	3	9	6 7/8	11 3/4	16 1/2
10	2 1/2	3	9	8 1/2	13 1/2	18 1/4
12	2 1/2	3	9	9 15/16	15	19 3/4
14	3	4	11	10 15/16	16 1/4	20 3/4
16	3	4	11	12 3/8	17 3/4	22 1/4
18	3 1/2	6	13 1/2	13 7/8	19 1/2	24
20	3 1/2	6	13 1/2	15 3/8	21	25 1/2
24	4	6	13 1/2	17 15/16	23 3/4	28 1/4
30	4	6	15	21 5/16	27	31 1/2
32	4	6	18	22 1/2	28 1/4	32 3/4
36	4	6	18	24 1/2	30 1/4	34 3/4

NOTES:

1. PIPE STANCHION SADDLE GRINNELL FIG. 258 OR EQUAL.
2. PIPE STANCHION SADDLE DESIGNED FOR PIPE 4"-36". PIPE LARGER THAN 36" SHALL BE SUPPORTED BY A STANCHION SADDLE DESIGNED BY THE MANUFACTURER.

12 - PIPE SUPPORT
SCALE: NTS

REVISIONS

NO	DATE	BY	DESCRIPTION
A	10/3/25	FT	30% SUBMITTAL
B	12/12/25	FT	60% SUBMITTAL
C	03/03/26	FT	90% SUBMITTAL

The installation shown is to be installed in accordance with the Arizona Water Company standard specifications on file with the Arizona Department of Environmental Quality

Arizona Licensed Professional Engineer stamp, date and signature

W.A. No.: | P.E. No.:
SYSTEM:
LEGAL DESC.:
TAX DIST.: | SBB No.:
DATE: | SCALE:
DRAWN BY: JLC | REVIEWED BY: SDC | CHECKED BY: FHT

ARIZONA WATER COMPANY
3805 N. BLACK CANYON HWY. POST OFFICE BOX 29006
PHOENIX, ARIZONA 85038-9006
(602) 240-6860

PROJECT DESC.: STANFIELD GWS&T USBR GRANT COORDINATION
PROJECT SHEET DESC.: PROCESS DETAILS

DWG. No.: D-502
SHEET 46 OF 79

consor

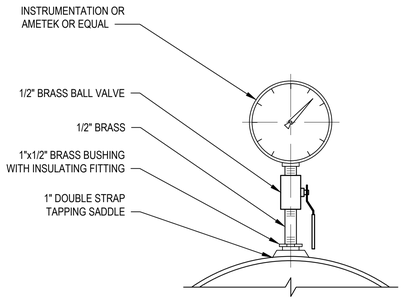

NOTES:

1. FOR S.S., GALV., AND PVC 2 1/2" AND SMALLER, USE A BUSHING IN A TEE.
2. MAX INDICATING RANGE ON SCALE SHALL NOT EXCEED 2x OF NORMAL MAX OPERATION PRESSURE.
3. GAUGE SHALL INCLUDE SILICONE OIL, STAINLESS STEEL WETTED COMPONENTS AND MICRO-ADJUSTMENT SCREWS.
4. PROVIDE SNUBBER IF REQ. TO STABILIZE READINGS.

13 - PRESSURE GAUGE
SCALE: NTS

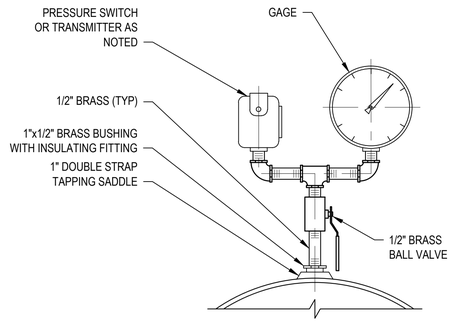

NOTES:

1. FOR S.S., GALV., AND PVC 2 1/2" AND SMALLER, USE A BUSHING IN A TEE.
2. MAX INDICATING RANGE ON SCALE SHALL NOT EXCEED 2x OF NORMAL MAX OPERATION PRESSURE.
3. PROVIDE SNUBBER IF REQ. TO STABILIZE READINGS.

14 - PRESSURE GAUGE & TRANSMITTER
SCALE: NTS

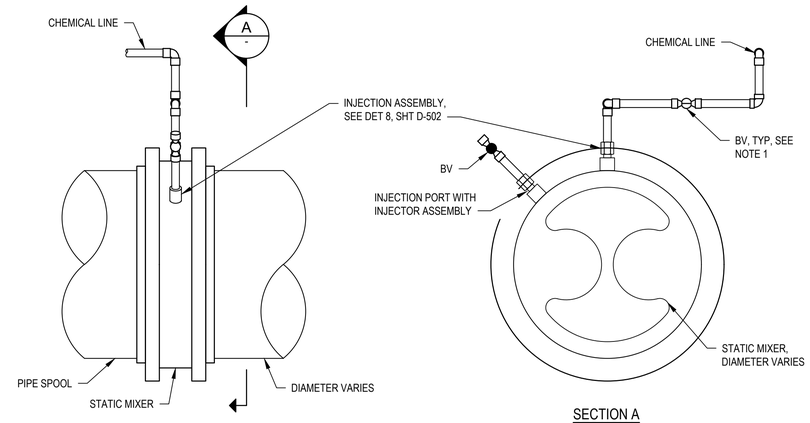

SECTION A

NOTES:

1. ALL BALL VALVES ON HYPOCHLORITE SERVICES TO BE VENTED.
2. STATIC MIXER SHALL BE CORROSION RESISTANT, OF A MATERIAL SUITABLE FOR USE WITH THE INJECTED CHEMICAL.
3. ALL WETTED MATERIALS SHALL BE NSF 61 CERTIFIED.

15 - STATIC MIXER (WAFER STYLE)
SCALE: NTS

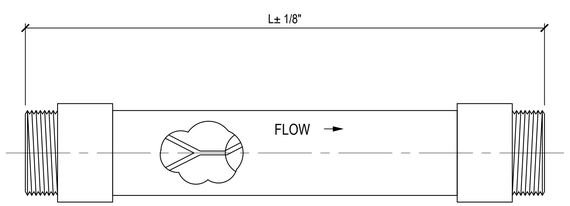

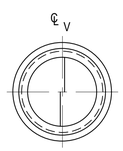

RIGHT SIDE VIEW

NOTES:

1. STATIC MIXER SHALL EITHER HAVE INTEGRAL CHEMICAL INJECTION OR BE INSTALLED DOWNSTREAM OF CHEMICAL INJECTION, WHERE SHOWN ON PLANS.
2. ALL WETTED MATERIALS SHALL BE COMPATIBLE WITH 12.5% STRENGTH SODIUM HYPOCHLORITE AND SHALL BE NSF 61 CERTIFIED.

16 - STATIC MIXER (IN-LINE)
SCALE: NTS

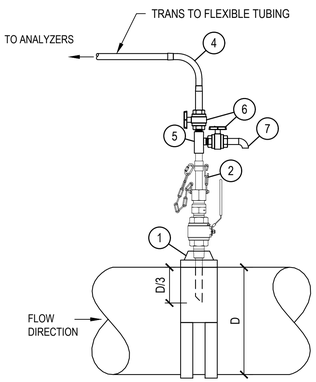

SAMPLING QUILL

MATERIALS:

1. DI SERVICE SADDLE, EPOXY COATED W/ DUAL SST STRAPS AND 1" NPT
2. ½" SST RETRACTABLE SAMPLE QUILL, W/ 1" MNPT CONNECTION TO PIPE. SELF-SEALING ASSEMBLY. SST SAFETY CHAIN. 45° BEVEL TIP TO FACE UPSTREAM.
3. NOT USED
4. ½" FLEXIBLE, CLEAR, BRAIDED, REINF PVC HOSE
5. 1/2" PVC SCHED 80 THREADED TEE
6. 1/2" PVC SCHED 80 TRUE UNION BV
7. PVC SAMPLE PORT, ELBOW DOWN

17 - ANALYZER SAMPLING QUILL
SCALE: NTS

REVISIONS

NO	DATE	BY	DESCRIPTION
A	10/3/25	FT	30% SUBMITTAL
B	12/12/25	FT	60% SUBMITTAL
C	03/03/26	FT	90% SUBMITTAL

The installation shown is to be installed in accordance with the Arizona Water Company standard specifications on file with the Arizona Department of Environmental Quality

Revised as-builts per ADEQ and Maricopa County rules, regulations, codes, ordinances, and requirements

Shall BE/IS as effective Jan/Feb/March/Apr/May/June

W.A. No.:
SYSTEM:
LEGAL DESC.:
TAX DIST.:
DATE:
DRAWN BY: JLC
REVIEWED BY: SDC
CHECKED BY: FHT
P.E. No.:
SB No.:
SCALE:

ARIZONA WATER COMPANY
3805 N. BLACK CANYON HWY. POST OFFICE BOX 29006
PHOENIX, ARIZONA 85038-9006
(602) 240-6860

PROJECT DESC: STANFIELD GWS&T USBR GRANT COORDINATION

PROJECT SHEET DESC: PROCESS DETAILS

consor

DWG. No.: D-503

SHEET 47 OF 79

Drawing Path and Name: C:\Users\derek.cloud\DC\ACCDocs\Consor\Stanfield GWS&T USBR Grant Coordination\Project Files\1-Design\07-PROC\2-SHEETS\W242167AZ.00_D-DETAILS.dwg, Plotted Date: March 9, 2026 9:43 AM By: Derek Cloud

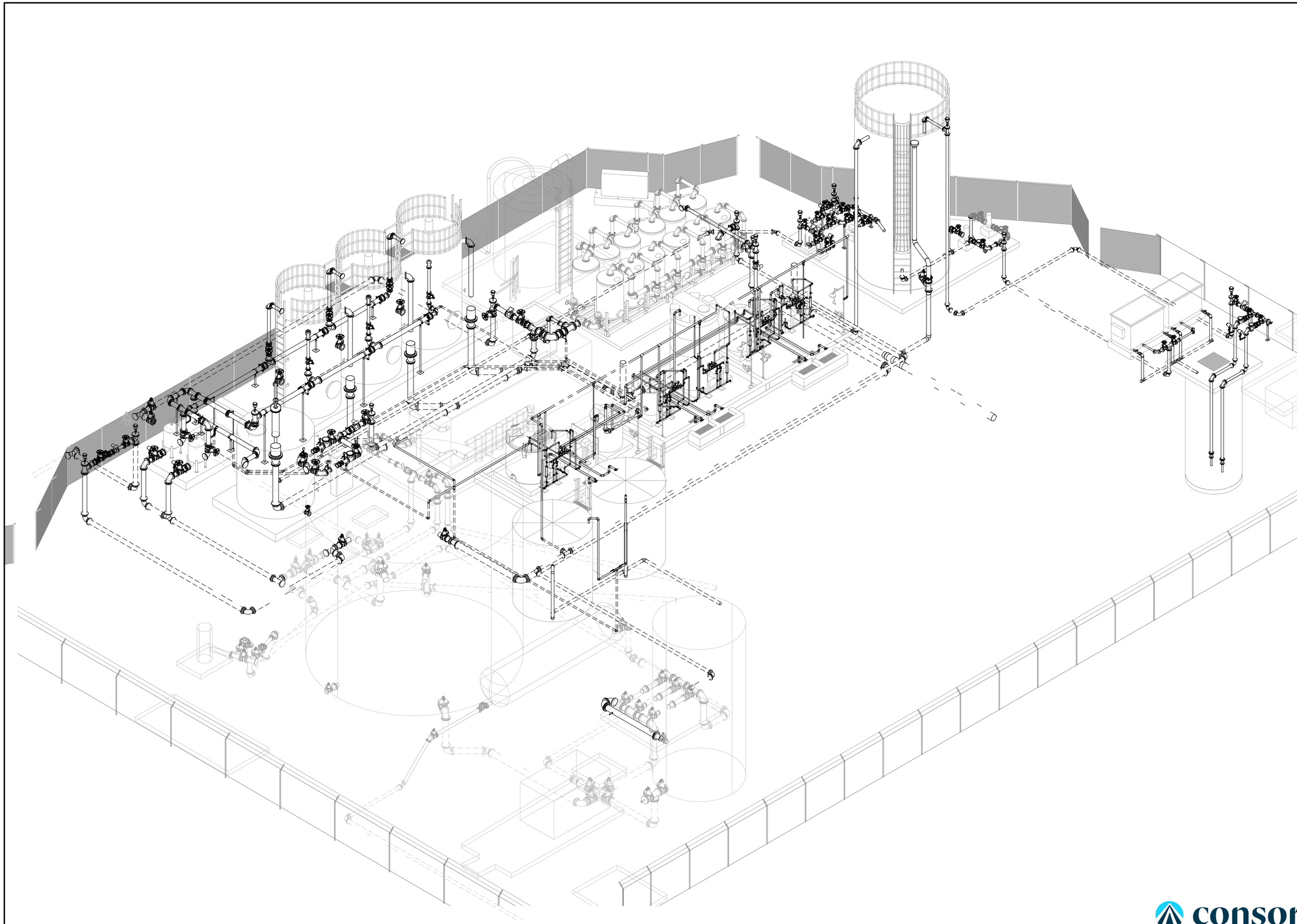

REVISIONS:

NO	DATE	BY	DESCRIPTION
A	10/3/25	FT	30% SUBMITTAL
B	12/12/25	FT	60% SUBMITTAL
C	03/03/26	FT	90% SUBMITTAL

The installation shown is to be installed in accordance with the Arizona Water Company standard specifications on file with the Arizona Department of Environmental Quality

Contact Arizona 811 at least two full working days before you begin excavation

ARIZONA 811 or attach Arizona811.com

W.A. No.:

P.E. No.:

SYSTEM:

LEGAL DESC.:

TAX DIST.:

SIB No.:

DATE: 03/03/2026

SCALE: AS SHOWN

DRAWN BY: JLC

REVIEWED BY: SDC

CHECKED BY: FHT

ARIZONA WATER COMPANY

3805 N. BLACK CANYON HWY. POST OFFICE BOX 29006
PHOENIX, ARIZONA 85038-9006
(602) 240-6860

PROJECT DESC: STANFIELD GWS&T USBR GRANT COORDINATION

PROJECT SHEET DESC: OVERALL SITE ISOMETRIC

consor

DWG. No.: D-900

SHEET 48 OF 80

Drawing Path and Name: C:\Users\jared.cloud\DC\ACCDocs\Consor\Stanfield GWS&T USBR Grant Coordination\Project Files\1-Design\07-PROC\2-SHEETS\W242167AZ.00_D-900.dwg, Plotted Date: March 9, 2026 1:50 PM By: Jared Cloud

PLAN LEGEND

- HOMERUN ((1) HOT, (1) NEUTRAL) (#12 MIN)
- EXPOSED CONDUIT
- UNDERGROUND CONDUIT DUCTBANK
- CONDUIT STUBUP
- CONDUIT TURNED DOWN
- CONDUIT RUN CONCEALED IN CEILING, FLOOR, OR IN WALLS
- UTILITY CONDUIT DUCTBANK
- EXISTING CONDUIT
- GROUNDING ELECTRODE CONDUCTOR
- OHE — EXISTING OVERHEAD ELECTRIC
- E — EXISTING UNDERGROUND ELECTRIC
- FENCE
- 20 — 240V SIMPLEX RECEPTACLE (NUMBER DENOTES CIRCUIT AMPS)
- 20 — 480V SIMPLEX RECEPTACLE (NUMBER DENOTES CIRCUIT AMPS)
- 120V, 20A SIMPLEX RECEPTACLE
- 120V, 20A DUPLEX RECEPTACLE
- $ — 120V, 20A SPST SWITCH
- $M — MANUAL MOTOR STARTER
- TELEPHONE JACK
- J OR J — JUNCTION BOX
- UB — UNDERGROUND JUNCTION BOX
- MS — MOTION DETECTOR
- R — ALARM BEACON
- ALARM HORN
- POLE MOUNTED AREA LIGHT
- NON-FUSED DISCONNECT SWITCH
- F — FUSED DISCONNECT SWITCH
- CB — CIRCUIT BREAKER STYLE DISCONNECT SWITCH
- COMBINATION MOTOR STARTER
- S — SOLENOID VALVE (ENERGIZE TO CLOSE)
- S — SOLENOID VALVE (ENERGIZE TO OPEN)
- BUTTERFLY VALVE
- PLUG VALVE
- GATE VALVE
- R — ALARM BEACON
- WALL MOUNTED LIGHT
- CXXXX — CONDUIT DESIGNATION
- GROUND ROD AND WELL
- PANELBOARD
- EXHAUST FAN
- LT — LEVEL TRANSMITTER
- PC — PHOTOCELL
- PI — PRESSURE GAUGE
- PS — PRESSURE SWITCH
- PT — PRESSURE TRANSMITTER
- T — THERMOSTAT
- NS — INTRUSION ALARM SWITCH
- LE — LEVEL ELEMENT
- H — SIREN/HORN
- FE — FLOW ELEMENT
- JB1 / TYP — DETAIL REFERENCE
- AA — ELEVATION SECTION REFERENCE

SINGLE LINE DIAGRAM AND SCHEMATIC LEGEND

- INTERNAL WIRING — FIELD WIRING — TERMINAL BLOCK — TERMINAL BLOCK
- R — ALARM BEACON
- R — PILOT LIGHT (LETTER DENOTES COLOR)
- H — R — PUSH-TO-TEST PILOT LIGHT (LETTER DENOTES COLOR)
- CR — CONTROL RELAY
- 20 — MOTOR (20 DENOTES MOTOR HORSEPOWER)
- PRESSURE SWITCH CLOSES ON RISING PRESSURE
- PRESSURE SWITCH OPENS ON RISING PRESSURE
- NORMALLY OPEN CONTACT TIME TO CLOSE (ON DELAY)
- NORMALLY CLOSED CONTACT TIME TO OPEN (ON DELAY)
- TEMPERATURE SWITCH CLOSES ON RISING TEMPERATURE
- ETM — ELAPSED TIME METER
- FUSE
- FUSED TERMINAL BLOCK
- OVERLOAD (ELECTRONIC TYPE)
- EARTH GROUND CONNECTION
- SIREN/HORN
- ANTENNA
- PASSIVE FILTER
- OVERLOAD
- DISCONNECT SWITCH (N.O.)
- DISCONNECT SWITCH (N.C.)
- TERMINAL BLOCK
- CURRENT TRANSFORMER
- POWER TRANSFORMER
- CIRCUIT BREAKER WITH DOOR OPERATED HANDLE
- CIRCUIT BREAKER
- NORMALLY OPEN CONTACTS
- NORMALLY CLOSED CONTACTS
- CONTROL RELAY CONTACTS CONTROLLED BY PLC DISCRETE OUTPUT (N.O.)
- CONTROL RELAY CONTACTS CONTROLLED BY PLC DISCRETE OUTPUT (N.C.)
- LIGHTING CONTACTOR OR MOTOR STARTER (NUMBER INDICATES NEMA RATING)
- NORMALLY OPEN MOMENTARY-CONTACT PUSHBUTTON
- NORMALLY CLOSED MOMENTARY-CONTACT PUSHBUTTON
- 3-POSITION SELECTOR SWITCH
- PUSH-PULL EMERGENCY STOP PUSHBUTTON
- LEVEL PROBE
- EXHAUST FAN
- LIMIT SWITCH (N.C.)
- LIMIT SWITCH (N.O.)
- NORMALLY OPEN CONTACT TIME TO CLOSE (ON DELAY)
- NORMALLY OPEN CONTACT TIME TO OPEN (OFF DELAY)

GENERAL ELECTRICAL REQUIREMENTS

A. THE COMPLETED INSTALLATION SHALL CONFORM TO ALL APPLICABLE FEDERAL, STATE AND LOCAL CODE ORDINANCES AND REGULATIONS. CONTRACTOR SHALL OBTAIN NECESSARY PERMITS AND INSPECTIONS REQUIRED BY THE GOVERNING AUTHORITIES. ALL WORK SHALL BE DONE IN A NEAT, WORKMANLIKE, FINISHED AND SAFE MANNER, ACCORDING TO THE LATEST PUBLISHED N.E.C.A. STANDARDS OF INSTALLATION, UNDER COMPETENT SUPERVISION. INSTALL GROUNDING AS REQUIRED BY THE NATIONAL ELECTRIC CODE (2017).

B. VISIT THE SITE TO BECOME FAMILIAR WITH EXISTING CONDITIONS AND ALL OTHER FACTORS WHICH MAY AFFECT THE EXECUTION OF THIS WORK.

C. ALL MATERIALS SHALL BE NEW AND OF THE BEST QUALITY, MANUFACTURED IN ACCORDANCE WITH NEMA, ANSI, U.L. OR OTHER APPLICABLE STANDARDS. THE USE OF MANUFACTURER'S NAMES, MODELS AND NUMBERS IS INTENDED TO ESTABLISH STYLE, QUALITY, APPEARANCE USEFULNESS AND BID PRICE. PROPOSED SUBSTITUTIONS SHALL BE SUBMITTED IN WRITING AND REVIEWED BY THE ENGINEER BEFORE ORDERING.

D. PROTECT ALL ELECTRICAL MATERIAL AND EQUIPMENT INSTALLED UNDER THIS CONTRACT AGAINST DAMAGE BY OTHER TRADES, WEATHER CONDITIONS OR ANY OTHER CAUSES. EQUIPMENT FOUND DAMAGED OR IN OTHER THAN NEW CONDITION WILL BE REJECTED AS DEFECTIVE.

E. LEAVE THE SITE CLEAN, REMOVE ALL DEBRIS, EMPTY CARTONS, TOOLS, CONDUIT, WIRE SCRAPS AND ALL MISCELLANEOUS SPARE EQUIPMENT AND MATERIALS USED IN THE WORK DURING CONSTRUCTION. ALL COMPONENTS SHALL BE FREE OF DUST, GRIT AND FOREIGN MATERIALS, LEFT AS NEW BEFORE FINAL ACCEPTANCE OF WORK.

F. REFER TO OTHER PLANS FOR EXACT LOCATION OF EQUIPMENT AND STRUCTURAL/ARCHITECTURAL FEATURES.

G. REFER TO SPECIFICATIONS FOR ADDITIONAL PROJECT REQUIREMENTS.

H. THESE CONTRACT DOCUMENTS ARE SUBJECT TO THE INTERPRETATION OF THE ENGINEER. ALL QUESTIONS REGARDING THESE CONTRACT DOCUMENTS SHALL BE BROUGHT TO THE ENGINEER. ANYONE WHO TAKES UPON THEMSELVES THE INTERPRETATION OF THESE CONTRACT DOCUMENTS OR MAKES REVISIONS TO THE SAME WITHOUT CONFERRING WITH THE ENGINEER SHALL BE RESPONSIBLE FOR THE CONSEQUENCES THEREOF.

I. LOCATION OF ELECTRICAL EQUIPMENT SHALL BE SCALED FROM THE SITE PLAN. UPON COMPLETION OF WORK, FURNISH A SET OF RED-LINED "AS-BUILT" DRAWINGS THAT ACCURATELY REFLECTS FINAL LOCATION OF UNDERGROUND CONDUIT AND OTHER ELECTRICAL EQUIPMENT COMPLETE WITH DIMENSIONS TO PERMANENT STRUCTURES.

J. CONTRACTOR SHALL NOTIFY OWNER AND/OR ENGINEER FOR INSPECTIONS AS REQUIRED.

K. CONTRACTOR SHALL BE RESPONSIBLE FOR OBTAINING INSPECTIONS FROM APPROPRIATE GOVERNMENTAL AGENCIES. INSPECTIONS BY OWNER AND/OR ENGINEER DO NOT RELIEVE THE CONTRACTOR OF THE RESPONSIBILITY TO OBTAIN REQUIRED INSPECTIONS FROM APPROPRIATE GOVERNMENTAL AGENCIES.

L. LABOR, MATERIALS, APPARATUS, AND APPLIANCES ESSENTIAL TO THE COMPLETE FUNCTIONING OF SYSTEMS DESCRIBED AND INDICATED HEREIN, OR WHICH MAY BE REASONABLY IMPLIED AS ESSENTIAL, WHETHER MENTIONED IN THE CONTRACT DOCUMENTS OR NOT, SHALL BE FURNISHED AND INSTALLED BY THE CONTRACTOR. IN CASE OF DOUBT AS TO THE WORK INTENDED, OR IN THE EVENT OF NEED FOR EXPLANATION THEREOF, CONTRACTOR SHALL REFER TO THE ENGINEER FOR SUPPLEMENTAL INSTRUCTIONS.

M. ALL ELECTRICAL EQUIPMENT SHALL BE CAPABLE OF OPERATING SUCCESSFULLY AT FULL-RATED LOAD, WITHOUT FAILURE, AT AN AMBIENT AIR TEMPERATURE OF 45°C, AND SPECIFICALLY RATED FOR AN ALTITUDE OF 1350 FEET. WHERE THESE CRITERIA CANNOT BE MET, ANCILLARY EQUIPMENT AND/OR SPECIAL DERATING FACTORS AS APPROVED BY THE ENGINEER AND/OR EQUIPMENT MFR SHALL BE UTILIZED.

N. THE CONTRACTOR SHALL PERFORM ALL NECESSARY SAW CUTTING, CORE DRILLING, EXCAVATING, REMOVAL, SHORING, BACKFILLING AND ETC. REQUIRED FOR THE PROPER LAYING OF CONDUITS WHETHER INSIDE OR OUTSIDE OF THE BUILDING(S) AND STRUCTURE(S). THE CONTRACTOR SHALL REPAIR AND PATCH WHERE DEMOLITION HAS TAKEN PLACE IN A MANNER TO MATCH EXISTING ORIGINAL STRUCTURE.

O. TYPICAL DETAILS APPLY IN ALL CASES WHETHER SPECIFICALLY REFERRED TO OR NOT.

P. BACKGROUND INFORMATION WAS DEVELOPED BASED ON AVAILABLE INFORMATION PROVIDED AT THE TIME OF DESIGN AND MAY NOT REFLECT ACTUAL FIELD CONDITIONS. CONFLICTS SHALL BE BROUGHT TO THE ENGINEER'S ATTENTION DURING CONSTRUCTION FOR DIRECTION.

Q. CONDUIT AND CONDUCTORS SPECIFICATIONS ARE BASED ON MINIMUM NEC REQUIREMENTS, CONTRACTOR MAY UP-SIZE AS NECESSARY BASED ON FIELD CONDITIONS ENCOUNTERED.

R. WORKING CLEARANCES IN FRONT OF AND AROUND ELECTRICAL EQUIPMENT SHALL BE PROVIDED PER NEC ARTICLE 110.26. FINAL ARRANGEMENT OF ELECTRICAL EQUIPMENT AND SERVICE CONNECTIONS SHALL ALLOW EQUIPMENT TO BE SERVICED, INCLUDING SPACE TO OPERATE SWITCHES, ACCESS RECEPTACLES, PULL MOTORS, ETC.

S. ARIZONA WATER COMPANY STANDARD DETAILS INCLUDED AS A PART OF THIS PROJECT APPLY IN ALL CASES WHETHER SPECIFICALLY REFERRED TO OR NOT.

T. ALL HMI's, OIT's, DIM's AND/OR OPERATOR ADJUSTABLE CONTROL INTERFACES SHALL BE PANEL DOOR MOUNTED SO THAT THE OPERATOR IS NOT EXPOSED TO ELECTRICAL CIRCUITS.

U. RTU CABINET AND OTHER CONTROL PANELS INSTALLED AS A PART OF THIS PROJECT SHALL INCORPORATE FINGER SAFE ELECTRICAL COVERS ON ALL EXPOSED ELECTRICAL COMPONENTS.

ABBREVIATIONS

A/C	AIR CONDITIONING
AI	ANALOG INPUT
AFF	ABOVE FINISHED FLOOR
AFG	ABOVE FINISHED GRADE
AO	ANALOG OUTPUT
APS	ARIZONA PUBLIC SERVICE
BLDG	BUILDING
BPS	BOOSTER PUMP STATION
C	CONDUIT
CB	CIRCUIT BREAKER
CKT	CIRCUIT
CL2	CHLORINE
CMU	CONCRETE MASONRY UNIT
COM	COMMON
CPT	CONTROL POWER TRANSFORMER
Cu	COPPER
DI	DISCRETE INPUT
DISC	DISCONNECT
DIST	DISTRIBUTION
DO	DISCRETE OUTPUT
DPDT	DOUBLE-POLE DOUBLE-THROW
DWG	DRAWING
(E)	EXISTING
E.C.	EMPTY CONDUIT
ELEC	ELECTRICAL
EMT	ELECTRICAL METALLIC TUBING
ENCL	ENCLOSURE
FIT	FLOW INDICATING TRANSMITTER
FS	FUSE
GEC	GROUNDING ELECTRODE CONDUCTOR
GFCI	GROUND FAULT CIRCUIT INTERRUPTER
GND	GROUND
GRS	GALVANIZED RIGID STEEL
IC	INSTRUMENT CABLE
IHS	INDIAN HEALTH SERVICES
INST	INSTRUMENT
IMC	INTERMEDIATE METAL CONDUIT
J-BOX	JUNCTION BOX
LCC	LIGHTING CONTROL CABINET
LFMC	LIQUIDTIGHT FLEXIBLE METAL CONDUIT
LIT	LEVEL INDICATING TRANSMITTER
LT	LIGHT
MBJ	MAIN BONDING JUMPER
MCB	MAIN CIRCUIT BREAKER
MCC	MOTOR CONTROL CENTER
MFR	MANUFACTURER
MIN	MINIMUM
MLO	MAIN LUG ONLY
MTD	MOUNTED
MTS	MANUAL TRANSFER SWITCH
MUE	MULTI-USE EASEMENT
NTS	NOT TO SCALE
PCP	PUMP CONTROL PANEL
PIT	PRESSURE INDICATING TRANSMITTER
PQM	POWER QUALITY METER
PR	PAIR
PRESS	PRESSURE
PUE	PUBLIC UTILITIES EASEMENT
REQ'TS	REQUIREMENTS
RO	REVERSE OSMOSIS
ROW	RIGHT OF WAY
RTU	REMOTE TERMINAL UNIT
RVSS	REDUCED VOLTAGE SOFT STARTER
S/S	START/STOP
SCA	SHORT CIRCUIT AMPS
SES	SERVICE ENTRANCE SECTION
SPC	SPARE CONDUIT
SPD	SURGE PROTECTIVE DEVICE
STT	SHIELDED TWISTED TRIAD
SW	SWITCH
TSP	TWISTED SHIELDED PAIR
TST	TWISTED SHIELDED TRIAD
TTB	TELEPHONE TERMINAL BLOCK
TYP	TYPICAL
UV	ULTRAVIOLET
UON	UNLESS OTHERWISE NOTED
VLV	VALVE
VFD	VARIABLE FREQUENCY DRIVE
WDT	WASTE DURATION TIMER
WIU	WHILE-IN-USE
WP	WEATHERPROOF
WTP	WATER TREATMENT PLANT
XFMR	TRANSFORMER

VICINITY MAP

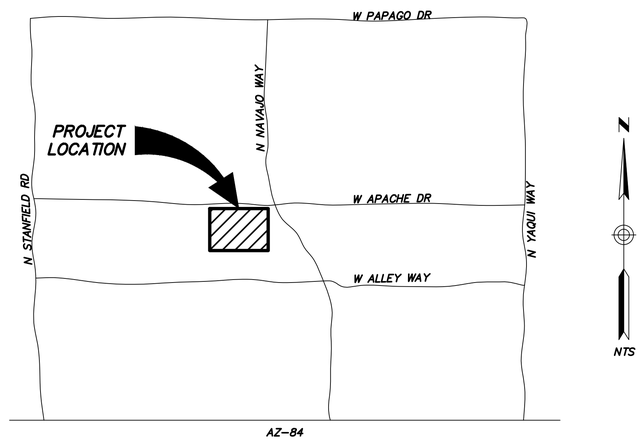

UTILITY CONTACT

ED3: CHRIS MICHIE (520-424-0408)

DARCOR ELECTRICAL CONSULTING ENGINEERS
22601 N. 17TH AVE. SUITE 140 PHOENIX, AZ 85027
Ph: (602) 795-2699
WWW.DARCORINC.COM

consor

REVISIONS:

NO	DATE	BY	DESCRIPTION
A	10/03/25	FT	30% SUBMITTAL
B	12/12/25	FT	60% SUBMITTAL
C	03/09/26	FT	90% SUBMITTAL

The installation shown is to be Installed In accordance with the Arizona Water Company standard specifications on file with the Arizona Department of Environmental Quality

Approved drawings are valid for a period of two years from date of approval. Resubmittal of drawings after two years may be required at the discretion of the Arizona Department of Environmental Quality.

W.A. No.:
SYSTEM:
LEGAL DESC.:
TAX DIST.:
DATE: 3/9/2026
DRAWN BY: MV
REVIEWED BY: VC
CHECKED BY: JLG
P.E. No.:
SB No.:
SCALE: N/A

ARIZONA WATER COMPANY
3805 N. BLACK CANYON HWY. POST OFFICE BOX 29006
PHOENIX, ARIZONA 85038-9006
(602) 240-6860

PROJECT DESC.: STANFIELD GWS&T USBR GRANT COORDINATION

PROJECT SHEET DESC.: ELECTRICAL LEGEND, NOTES & ABBREVIATIONS

Registered Professional Engineer (Electrical) CERTIFICATE NO. 53839 JORGE GERARDO 3/9/26 Date Signed ARIZONA U.S.A.

DWG. No.: E-001

Drawing Path and Name: Z:\2025\25028-Consor (AWC Stanfield Wells 1 &3 Arsenic and Nitrate Treatment)\Drawings\25028-E1 (Cover Sheet).dwg, Plotted Date: March 9, 2026 6:48 PM By: Tobias J. Wiley

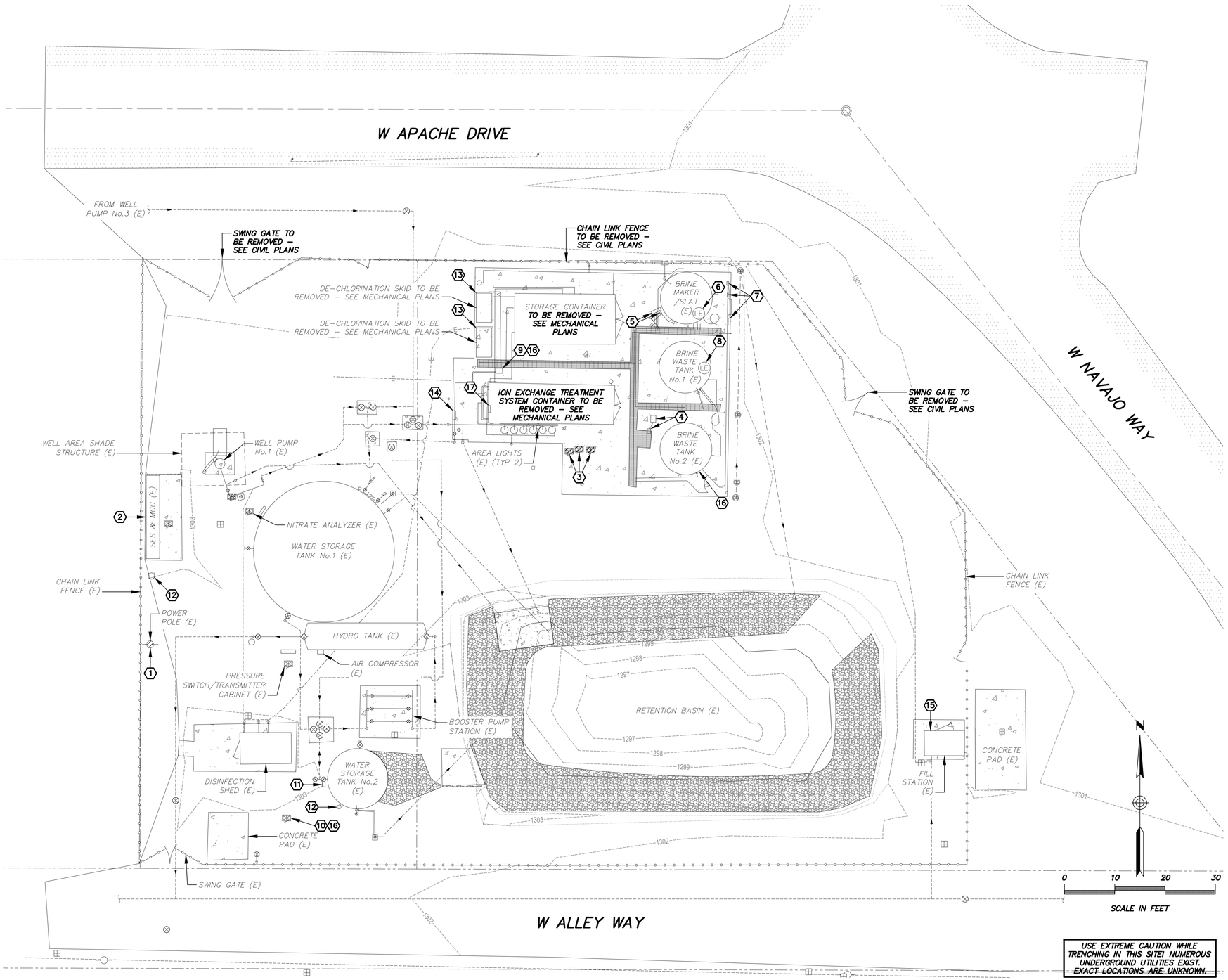

USE EXTREME CAUTION WHILE TRENCHING IN THIS SITE! NUMEROUS UNDERGROUND UTILITIES EXIST. EXACT LOCATIONS ARE UNKNOWN.

DEMOLITION GENERAL NOTES

A. DEMOLITION OF EQUIPMENT INCLUDES DISCONNECTING AND REMOVING ALL ASSOCIATED CONDUCTORS DISCONNECT AND REMOVE ALL CONDUCTORS. DEMOLITION OF CONDUITS INCLUDES REMOVAL AND DISPOSAL OF EXISTING EXPOSED CONDUITS.

B. ALL REMOVED MATERIAL NOT BEING SALVAGED BY OWNER SHALL BECOME THE PROPERTY OF THE CONTRACTOR FOR REMOVAL AND DISPOSAL.

C. ALL DEMOLISHED AND REMOVED MATERIAL SHALL BE HAULED OFF SITE AND DISPOSED OF AT AN APPROVED LANDFILL, OR OTHER APPROVED LOCATION.

D. THE CONTRACTOR SHALL PERFORM ALL WORK ON THIS PROJECT WHILE THE EXISTING FACILITIES AND SURROUNDING UTILITIES ARE OPERATING. ALL CONNECTIONS OF NEW WORK TO EXISTING FACILITIES SHALL BE PERFORMED IN A MANNER TO MINIMIZE DOWNTIME, OPERATIONAL UPSETS.

E. DEMOLITION ON THIS PROJECT IS TO OCCUR AFTER NEW EQUIPMENT IS INSTALLED TO MINIMIZE DOWNTIME.

F. UNLESS OTHERWISE SPECIFIED, CUT UNDERGROUND CONDUITS 6" BELOW GRADE, CAP, AND ABANDON IN PLACE.

G. COORDINATE WITH OWNER FOR EQUIPMENT THAT IS TO BE SALVAGED.

DEMOLITION KEY NOTES

1. COORDINATE WITH ED3 FOR DISCONTINUANCE OF THE EXISTING ELECTRICAL SERVICE TO THE SITE. COORDINATE WITH ED3 FOR THE REMOVAL OF THE EXISTING POLE MOUNTED UTILITY TRANSFORMERS. THE EXISTING TELEPHONE TERMINAL BOX AND CABLES SHALL REMAIN UNDISTURBED.
2. DISCONNECT, REMOVE, AND PROPERLY DISPOSE OF EXISTING METER AND METER SECTION OF THE MCC, NEUTRAL TO GROUND CONNECTION, AND RTU SECTION. DISCONNECT AND REMOVE EXISTING CONDUIT AND CONDUCTORS BACK TO SOURCE. THE REMAINDER OF THE EQUIPMENT IN THE MCC SHALL REMAIN AND BE REUSED.
3. DISCONNECT, REMOVE, AND PROPERLY DISPOSE OF EXISTING PANELBOARDS, TRANSFORMER, JUNCTION BOXES, AND MOUNTING STANDS. DISCONNECT AND REMOVE EXISTING CONDUIT AND CONDUCTORS BACK TO SOURCE.
4. DISCONNECT, REMOVE, AND PROPERLY DISPOSE OF EXISTING SUMP PUMP, JUNCTION BOX, RECEPTACLE, PUMP CONTROLLER, FLOAT SWITCHES, AND MOUNTING STANDS. DISCONNECT AND REMOVE EXISTING CONDUIT AND CONDUCTORS BACK TO SOURCE.
5. EXISTING BRINE PUMP, PUMP CONTROLLER, MOUNTING STAND AND ASSOCIATED CONDUIT AND CONDUCTORS TO REMAIN AND BE REUSED.
6. EXISTING BRINE TANK LEVEL SENSORS TO REMAIN AND BE REUSED.
7. DISCONNECT, REMOVE, AND PROPERLY DISPOSE OF EXISTING WASTE OFFLOAD PUMP, JUNCTION BOX, PUMP CONTROLLER, FLOWMETER, OFFLOAD STATION, AND MOUNTING STANDS. DISCONNECT AND REMOVE EXISTING CONDUIT AND CONDUCTORS BACK TO SOURCE.
8. DISCONNECT, REMOVE, AND PROPERLY DISPOSE OF EXISTING PRIMARY WASTE TANK LEVEL SENSOR. DISCONNECT AND REMOVE EXISTING CONDUITS, INCLUDING UNUSED CONDUITS, AND CONDUCTORS BACK TO SOURCE.
9. EXISTING JUNCTION BOX SHALL REMAIN AND BE REUSED AS LONG AS THE EXISTING ION EXCHANGE TREATMENT SYSTEM CONTAINER REMAINS IN OPERATION. ONCE IT IS NO LONGER IN OPERATION, THE JUNCTION BOX AND ALL ASSOCIATED CONDUIT AND CONDUCTORS SHALL BE DISCONNECTED AND REMOVED.
10. DISCONNECT, REMOVE, AND PROPERLY DISPOSE OF EXISTING ABANDONED ELECTRICAL ENCLOSURES AND MOUNTING STAND, DISCONNECT AND REMOVE EXISTING CONDUITS AND CONDUCTORS BACK TO SOURCE.
11. EXISTING STORAGE TANK LEVEL TRANSMITTER, DIGITAL DISPLAY, JUNCTION BOX, AND MOUNTING STAND TO REMAIN AND BE REUSED.
12. EXISTING AREA LIGHT TO REMAIN AND BE REUSED.
13. DISCONNECT AND REMOVE ALL CONDUITS AND CONDUCTORS BACK TO SOURCE ASSOCIATED WITH THE CHEMICAL FEED SKID.
14. EXISTING FLOWMETER SHALL REMAIN AND BE REUSED AS LONG AS THE EXISTING ION EXCHANGE TREATMENT SYSTEM CONTAINER REMAINS IN OPERATION. ONCE IT IS NO LONGER IN OPERATION, THE FLOWMETER AND ALL ASSOCIATED CONDUIT AND CONDUCTORS SHALL BE DISCONNECTED AND REMOVED.
15. EXISTING FILL STATION TO REMAIN AND BE REUSED.
16. DISCONNECT AND REMOVE ABANDONED CONDUIT(S).
17. EXISTING HATCH NITRATE ANALYZER INSIDE ION EXCHANGE TREATMENT SYSTEM CONTAINER SHALL BE DISCONNECTED AND SALVAGED FOR REUSE.

REVISIONS:

NO	DATE	BY	DESCRIPTION
A	10/03/25	FT	30% SUBMITTAL
B	12/12/25	FT	60% SUBMITTAL
C	03/09/26	FT	90% SUBMITTAL

The Installation shown is to be Installed In accordance with the Arizona Water Company standard specifications on file with the Arizona Department of Environmental Quality

Registered Professional Engineer (Civil) CERTIFICATE NO. 53839 JORGE GERARDO 3/9/26 Date Signed ARIZONA U.S.A.

W.A. No.:
SYSTEM:
LEGAL DESC.:
TAX DIST.:
DATE: 3/9/2026
DRAWN BY: MV
P.E. No.:
SBI No.:
SCALE: AS SHOWN
REVIEWED BY: VC
CHECKED BY: JLG

ARIZONA WATER COMPANY
3805 N. BLACK CANYON HWY. PHOENIX, ARIZONA 85018-8006
POST OFFICE BOX 29006
(602) 240-6860

PROJECT DESC: STANFIELD GWS&T USBR GRANT COORDINATION

PROJECT SHEET DESC: ELECTRICAL DEMOLITION SITE PLAN

DARCOR ELECTRICAL CONSULTING ENGINEERS
22801 N. 17TH AVE. SUITE 140 PHOENIX, AZ 85027
Ph: (602) 795-2699 WWW.DARCORINC.COM

consor

DWG. No.: E-002

SHEET 61 OF 98

Drawing Path and Name: Z:\2025\25028-Consor (AWC Stanfield Wells 1 &3 Arsenic and Nitrate Treatment)\Drawings\25028-E2 (Demo Site).dwg, Plotted Date: March 9, 2026 6:48 PM By: Tobias J. Wiley

GENERAL NOTES

A. SEE LUMINAIRE SCHEDULE ON SHEET E-001.

B. SEE SINGLE LINE DIAGRAM ON SHEET E-004 AND CONDUIT BLOCK DIAGRAMS ON SHEETS E-012 & E-015 FOR CONDUIT AND CONDUCTOR REQUIREMENTS.

C. SEE SHEETS E-019 THRU E-025 FOR ELECTRICAL DETAILS.

D. NO CONDUITS OR GROUND CONDUCTOR SHALL PENETRATE THE WELL PUMP PAD.

E. ALL EXPOSED CONDUIT SHALL BE SUPPORTED AS SPECIFIED OR PER NEC; WHICHEVER IS THE MORE STRINGENT REQUIREMENT.

F. MOST CONDUIT ROUTING NOT SHOWN FOR CLARITY. CONTRACTOR SHALL BE RESPONSIBLE FOR ROUTING CONDUITS IN SUCH A MANNER THAT THERE WILL BE NO MORE THAN 360 DEGREES OF CONDUIT BENDS PER RUN. FINAL ROUTING OF CONDUIT SHALL BE CLEARLY INDICATED AND DIMENSIONED ON THE CONTRACTOR "AS-BUILT" DRAWINGS.

KEY NOTES

1. INSTALL (2) 4" CONDUITS FOR UTILITY PRIMARY CONDUCTORS. MAINTAIN 12" VERTICAL SEPARATION AND 12" HORIZONTAL SEPARATION BETWEEN POWER AND COMMUNICATION CONDUITS. TRENCH AND BACKFILL PER ED3 REQUIREMENTS.
2. INSTALL (6) 4" SECONDARY CONDUITS, TRENCH AND BACKFILL PER ED3 REQUIREMENTS.
3. INSTALL UTILITY TRANSFORMER PAD PER ED3 REQUIREMENTS. MAINTAIN ALL REQUIRED WORKING CLEARANCES.
4. INSTALL ELECTRICAL UNDERGROUND #3-1/2 PULL BOX PER DETAIL UB2 ON DRAWING E-021.
5. INSTALL 120V, 20A LIGHT SWITCH IN "FD" TYPE BOX WITH WP COVER AT 48"AFG. SWITCH TO CONTROL AREA LIGHTS.
6. INSTALL POLE MOUNTED AREA LIGHT AT +13' AFG. POLE SHALL INCLUDE EXTENDED BASE PER AWC STANDARD DETAIL.
7. INSTALL CONCRETE ENCASED DUCTBANK PER AWC STANDARD DETAIL FOR CONDUIT DUCTBANKS UNDER DRIVEWAY.
8. #2/0 BARE Cu GROUNDING ELECTRODE CONDUCTOR AT 30" BELOW GRADE.
9. INSTALL (2) 48" X 48" X 48" TRAFFIC RATED ELECTRICAL HANDHOLES PER AWC STANDARDS DETAILS, ONE FOR POWER AND ONE FOR CONTROL CONDUITS.

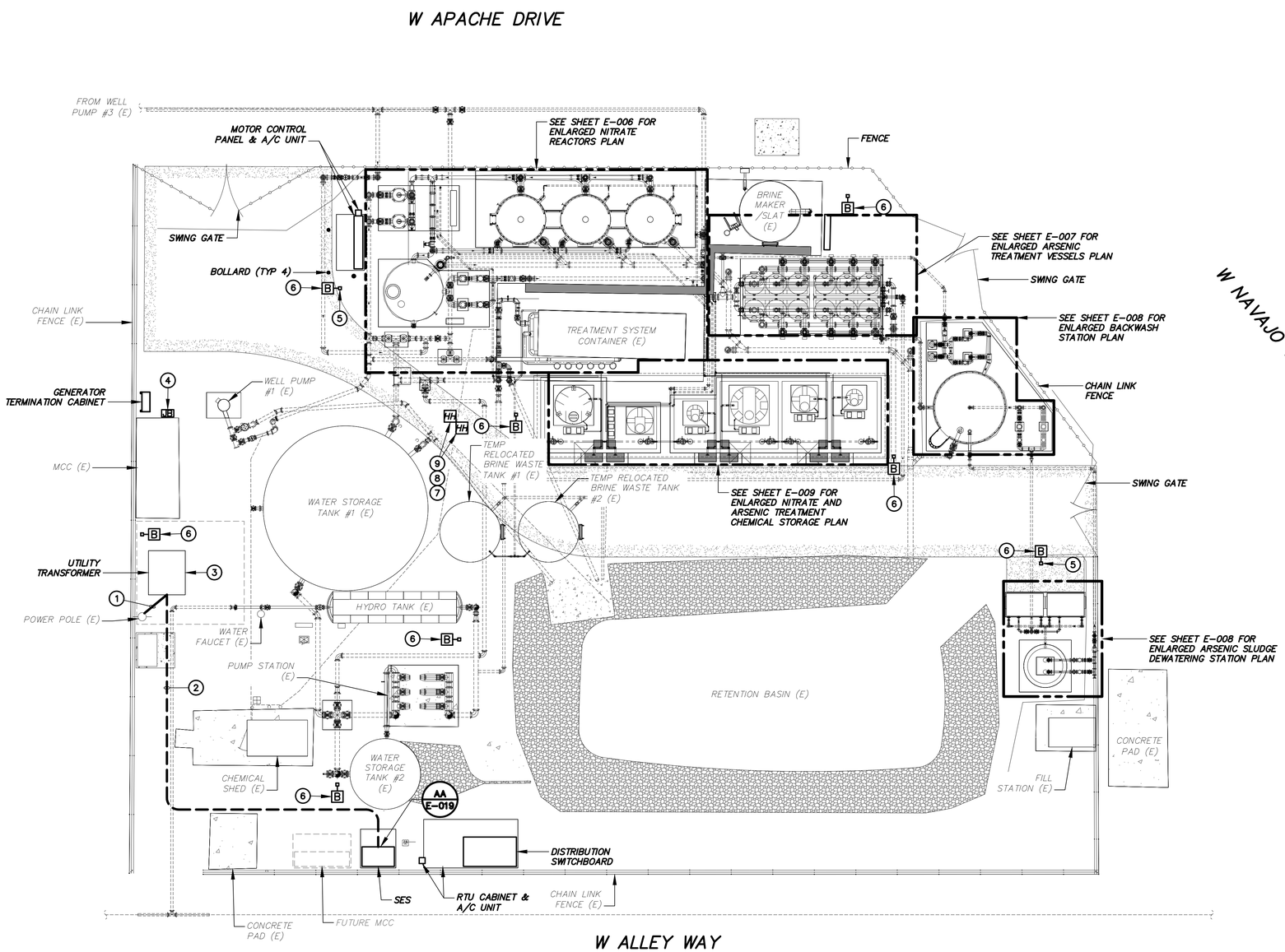

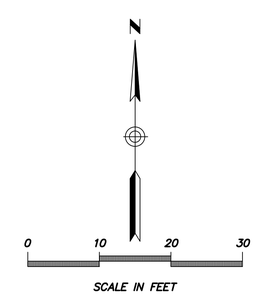

USE EXTREME CAUTION WHILE TRENCHING IN THIS SITE! NUMEROUS UNDERGROUND UTILITIES EXIST. EXACT LOCATIONS ARE UNKNOWN.

REVISIONS:

NO	DATE	BY	DESCRIPTION
A	10/03/25	FT	30% SUBMITTAL
B	12/12/25	FT	60% SUBMITTAL
C	03/09/26	FT	90% SUBMITTAL

The Installation shown is to be Installed In accordance with the Arizona Water Company standard specifications on file with the Arizona Department of Environmental Quality

Registered Professional Engineer (Civil) CERTIFICATE NO. 53839 JORGE GERARDO 3/9/26 Date Signed ARIZONA U.S.A.

W.A. No.: P.E. No.:
SYSTEM:
LEGAL DESC.:
TAX DIST.: SBI No.:
DATE: 3/9/2026 SCALE: AS SHOWN
DRAWN BY: ### REVIEWED BY: ### CHECKED BY: ###

ARIZONA WATER COMPANY
3805 N. BLACK CANYON HWY. POST OFFICE BOX 29006
PHOENIX, ARIZONA 85038-9006
(602) 240-6860

PROJECT DESC: STANFIELD GWS&T USBR GRANT COORDINATION
PROJECT SHEET DESC: ELECTRICAL SITE PLAN

DWG. No.: E-003

DARCOR ELECTRICAL CONSULTING ENGINEERS
22601 N. 17TH AVE. SUITE 140 PHOENIX, AZ 85027
Ph: (602) 795-2699 WWW.DARCORINC.COM

consor

Drawing Path and Name: Z:\2025\25028-Consor (AWC Stanfield Wells 1 &3 Arsenic and Nitrate Treatment)\Drawings\25028-E3 (Site Plan).dwg, Plotted Date: March 9, 2026 6:49 PM By: Tobias J. Wiley

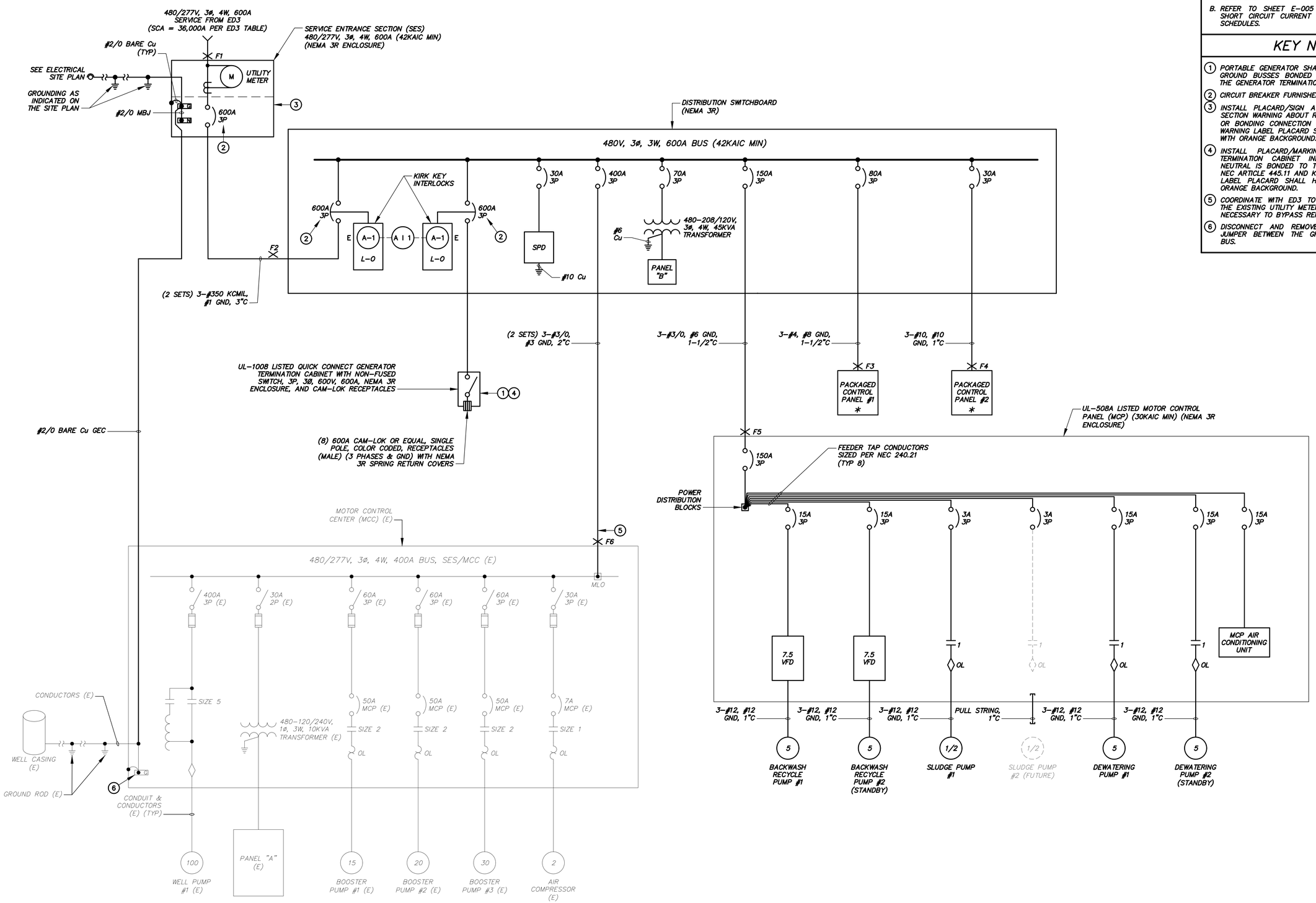

* DENOTES EQUIPMENT FURNISHED AS PART OF A PACKAGED SYSTEM.

GENERAL NOTES

A. REFER TO CONDUIT BLOCK DIAGRAM ON SHEET E-012 & E-013 FOR ADDITIONAL CONDUIT AND CONDUCTOR REQUIREMENTS.

B. REFER TO SHEET E-005 FOR LOAD CALCULATIONS, SHORT CIRCUIT CURRENT CALCULATIONS, AND PANEL SCHEDULES.

KEY NOTES

1. PORTABLE GENERATOR SHALL HAVE ITS NEUTRAL AND GROUND BUSSES BONDED PRIOR TO CONNECTING TO THE GENERATOR TERMINATION CABINET.
2. CIRCUIT BREAKER FURNISHED WITH LSI FEATURES.
3. INSTALL PLACARD/SIGN AT THE SERVICE ENTRANCE SECTION WARNING ABOUT REMOVAL OF THE GROUNDING OR BONDING CONNECTION PER NEC ARTICLE 701.7(B) WARNING LABEL PLACARD SHALL HAVE BLACK LETTERS WITH ORANGE BACKGROUND.
4. INSTALL PLACARD/MARKING ON THE GENERATOR TERMINATION CABINET INDICATING THE GENERATOR NEUTRAL IS BONDED TO THE GENERATOR FRAME PER NEC ARTICLE 445.11 AND KEY NOTE 1 ABOVE. WARNING LABEL PLACARD SHALL HAVE BLACK LETTERS WITH ORANGE BACKGROUND.
5. COORDINATE WITH ED3 TO DISCONNECT AND REMOVE THE EXISTING UTILITY METER. INSTALL CONDUCTORS AS NECESSARY TO BYPASS REMOVED UTILITY METER.
6. DISCONNECT AND REMOVE EXISTING MAIN BONDING JUMPER BETWEEN THE GROUND BUS AND NEUTRAL BUS.

REVISIONS:

NO	DATE	BY	DESCRIPTION
A	10/03/25	FT	30% SUBMITTAL
B	12/12/25	FT	60% SUBMITTAL
C	03/09/26	FT	90% SUBMITTAL

The Installation shown is to be Installed In accordance with the Arizona Water Company standard specifications on file with the Arizona Department of Environmental Quality

Revised Schemes BY1 or Based upon Sch. revisions, and/or Field and Shop drawings

Built BY1 or other information

W.A. No.:
F.E. No.:
SYSTEM:
LEGAL DESC.:
TAX DIST.:
SIB No.:
DATE: 3/9/2026
SCALE: N/A
DRAWN BY: MV
REVIEWED BY: VC
CHECKED BY: JLG

ARIZONA WATER COMPANY
3805 N. BLACK CANYON HWY. POST OFFICE BOX 29006
PHOENIX, ARIZONA 85038-9006
(602) 240-6860

PROJECT DESC: STANFIELD GWS&T USBR GRANT COORDINATION

PROJECT SHEET DESC: SINGLE LINE DIAGRAM

Registered Professional Engineer (Electrical) CERTIFICATE NO. 53839 JORGE GERARDO 3/9/26 Date Signed ARIZONA U.S.A.

DWG. No.: E-004

SHEET 63 OF 98

DARCOR ELECTRICAL CONSULTING ENGINEERS
22801 N. 17TH AVE. SUITE 140 PHOENIX, AZ 85027 Ph: (602) 795-2899 WWW.DARCORINC.COM

consor

480V, 3Ø LOAD CALCULATIONS

LOAD DESCRIPTION	KVA	H.P.	AMPS
BOOSTER PUMP No.1 (E)	--	10	14.0
BOOSTER PUMP No.2 (E)	--	20	27.0
BOOSTER PUMP No.3 (E)	--	30	40.0
WELL PUMP No.1 (E)	--	100	124.0
AIR COMPRESSOR (E)	--	2	3.4
PANEL "A" TRANSFORMER (E)	*10*	--	20.8
NEW LOADS	--	--	--
PANEL B TRNASFORMER (3PH)	***45***	--	***54.1***
MCP AIR CONDITIONING UNIT	***4.4***	--	***5.3***
NITRATE SYSTEM	--	--	--
PACKAGED CONTROL PANEL #1	***54***	--	***65.0***
ARSENIC SYSTEM	--	--	--
BACKWASH RECYCLE PUMP #1	--	***5***	***7.6***
BACKWASH RECYCLE PUMP #2 (STANDBY)	--	***5***	***0.0***
SLUDGE PUMP #1	--	***0.5***	***1.1***
FUTURE SLUDGE PUMP #2 (STANDBY)	--	***0.5***	***0.0***
DEWATERING PUMP #1	--	***5***	***7.6***
FUTURE DEWATERING PUMP #2 (STANDBY)	--	***5***	***0.0***
PACKAGED CONTROL PANEL #2	***20.8***	--	***25.0***
SUBTOTAL =			***394.9***
+25% OF LARGEST MOTOR (100HP) =			***31.0***
MINIMUM SERVICE SIZE =			***425.9***
SELECTED SERVICE SIZE =			***600A***

PANEL: "A" | VOLTAGE: 240 / 120 1Ø | MAINS: 100A MCB | BUS AMPS: EXISTING
TYPE: EXISTING | ENCLOSURE: EXISTING | MOUNTING: EXISTING | MIN AIC: 10,000

VA LOAD

	CIRCUIT DESCRIPTION	BKR	CKT	AØ	BØ	CKT	BKR	CIRCUIT DESCRIPTION
X	AREA LIGHTS	20	1	200		2	20	CHLORINE BLDG.
				1500				
X	AREA RECEPT	20	3		180	4	20	WATER SALES DEVICE
					300			
X	MCC RECEPT	20	5	180		6	20	SPARE
				0				
X	MCC LIGHTS	20	7		200	8	20	REMOTE RTU CABINET
					100			
	SPARE	20	9	0		10	20	SPARE
				0				
	SPARE	20	11		0	12	20	SPARE
					0			
	SPARE	20	13	0		14	20	SPARE
				0				
	SPARE	20	15		0	16	20	SPARE
					0			
	SPARE	20	17	0		18	20	SPARE
				0				
	SPARE	20	19		0	20	20	SPARE
					0			
	SPARE	20	21	0		22	20	SPARE
				0				
	SPARE	20	23		0	24	20	SPARE
					0			
	CONNECTED VA PER PHASE			3118.0	3050.0			NOTES:
	CONNECTED AMPS PER PHASE			26.0	25.4			*"X" DENOTES CONTINUOUS LIGHTING LOAD
	+25% LARGEST MOTOR VA			0	0			*"XX" DENOTES LARGEST MOTOR LOAD
	+25% CONTINUOUS LOAD VA			95	95			
	DEMAND VA PER PHASE			3213	3145			***NEW WORK DENOTED IN BOLD ITALIC TEXT***
	TOTAL AMPS PER PHASE			26.8	26.2			

PANEL: "B" | VOLTAGE: 208 / 120 3Ø | MAINS: 150A MCB | BUS AMPS: 200
TYPE: BOLT ON C/B'S | ENCLOSURE: IN SWBD | MOUNTING: IN SWBD | MIN AIC: 22,000

VA LOAD

	CIRCUIT DESCRIPTION	BKR	CKT	AØ	BØ	CØ	CKT	BKR	CIRCUIT DESCRIPTION	
	RTU CABINET	20	1	1200			2	20	POLE MOUNTED AREA LIGHTS	X
				400						
X	CHEMICAL AREA LIGHTS	20	3		200		4			X
					400					
	FIT-132	15	5			100	6			
	FIT-371	15	7	100			8			
	FIT-511	15	9		100		10			
			11				12			
			13				14			
			15				16			
			17				18			
			19				20			
			21				22			
			23				24			
			25				26			
			27				28			
			29				30			
			31				32			
			33				34			
			35				36			
			37				38			
			39				40			
			41				42			
	CONNECTED VA PER PHASE			1700.0	700.0	100.0			**NOTES:**	
	CONNECTED AMPS PER PHASE			14.2	5.8	0.8			*"X" DENOTES CONTNOUS LIGHTING LOAD	
	+25% LARGEST MOTOR VA			0	0	0			*"XX" DENOTES LARGEST MOTOR LOAD	
	+25% CONTINUOUS LOAD VA			100	150	0			*"L" DENOTES LOCKING DEVICE	
	DEMAND VA PER PHASE			1800	850	100			*"G" DENOTES GFCI TYPE CIRCUIT BREAKER	
	TOTAL AMPS PER PHASE			15.0	7.1	0.8				

SHORT CIRCUIT CALCULATIONS

CABLES/CONDUCTORS:

$$I_{SC\_RMS} = (I_{SC} \times M) + \text{Motor Cont}_{\text{if applicable}}$$

$$M = 1/(1+f) \qquad f = \frac{1.732 \times L \times I_{SC}}{C \times E_{L-L}}$$

TRANSFORMERS:

$$I_{SCA} = I_{FLA} \times M \qquad M = \frac{100}{\%Z}$$

Fault Point F(_)	Panel/Transformer Description	Source (Fault Point)	I (Source) (Amps)	Conduit Type	Cable Type	Wire/Bus Size	"C" Value	E_{L-L} (Volts)	L (Length) (FT)	f	XFMR FLA (AMPS)	XFMR %Z	M	Motor Contribution	I (Short Circuit) (Amps)
1	SES	Utility	36,000												**36,000**
2	DISTRIBUTION SWITCHBOARD	1	36,000	NM	600V	2 SET(S) OF 350	22,737	480	30	0.086	--	--	0.921	496	**33,158**
3	EXISTING MOTOR CONTROL CENTER	2	33,158	NM	600V	2 SET(S) OF 3/0	13,923	480	120	0.516	--	--	0.660		**21,878**
4	MOTOR CONTROL PANEL	2	33,158	NM	600V	1 SET(S) OF 3/0	13,923	480	10	0.086	--	--	0.921		**30,534**
5	PACKAGED CONTROL PANEL #1	2	33,158	NM	600V	1 SET(S) OF 4	3,826	480	175	5.473	--	--	0.154		**5,123**
6	PACKAGED CONTROL PANEL #2	2	33,158	NM	600V	1 SET(S) OF 10	982	480	125	15.230	--	--	0.062		**2,043**
7	PANEL "A" TRANSFORMER SECONDARY				600V	SET(S) OF					124.9	3	33.333		**4,163**
8	PANEL "A"	3	4,163	NM	600V	1 SET(S) OF 1/0	9,317	208	5	0.019	--	--	0.982		**4,087**

DARCOR ELECTRICAL CONSULTING ENGINEERS
22601 N. 17TH AVE.
SUITE 140
PHOENIX, AZ 85027
Ph: (602) 795-2699
WWW.DARCORINC.COM

consor

REVISIONS:

NO	DATE	BY	DESCRIPTION
A	10/03/25	FT	30% SUBMITTAL
B	12/12/25	FT	60% SUBMITTAL
C	03/09/26	FT	90% SUBMITTAL

The Installation shown is to be Installed In accordance with the Arizona Water Company standard specifications on file with the Arizona Department of Environmental Quality

Required Clearance 3FT in all Based from Gate, working space, 30FT in front of equipment

Call 811 or visit Arizona811.com

W.A. No.:
P.E. No.:
SYSTEM:
LEGAL DESC.:
TAX DIST.:
SIB No.:
DATE: 3/9/2026
SCALE: N/A
DRAWN BY: MV
REVIEWED BY: VC
CHECKED BY: JLG

ARIZONA WATER COMPANY
3805 N. BLACK CANYON HWY. POST OFFICE BOX 29006
PHOENIX, ARIZONA 85038-9006
(602) 240-6860

PROJECT DESC.: STANFIELD GWS&T USBR GRANT COORDINATION

PROJECT SHEET DESC.: PANEL SCHEDULE AND SHORT CIRCUIT CURRENT CALCULATIONS

Registered Professional Engineer (Electrical) CERTIFICATE NO. 53839 JORGE GERARDO 3/9/26 ARIZONA U.S.A.

DWG. No.: E-005

Drawing Path and Name: Z:\2025\25028-Consor (AWC Stanfield Wells 1 &3 Arsenic and Nitrate Treatment)\Drawings\25028-E5 (Panel Schedule & Short Circuit Calcs).dwg, Plotted Date: March 9, 2026 7:25 PM By: Jgerardo

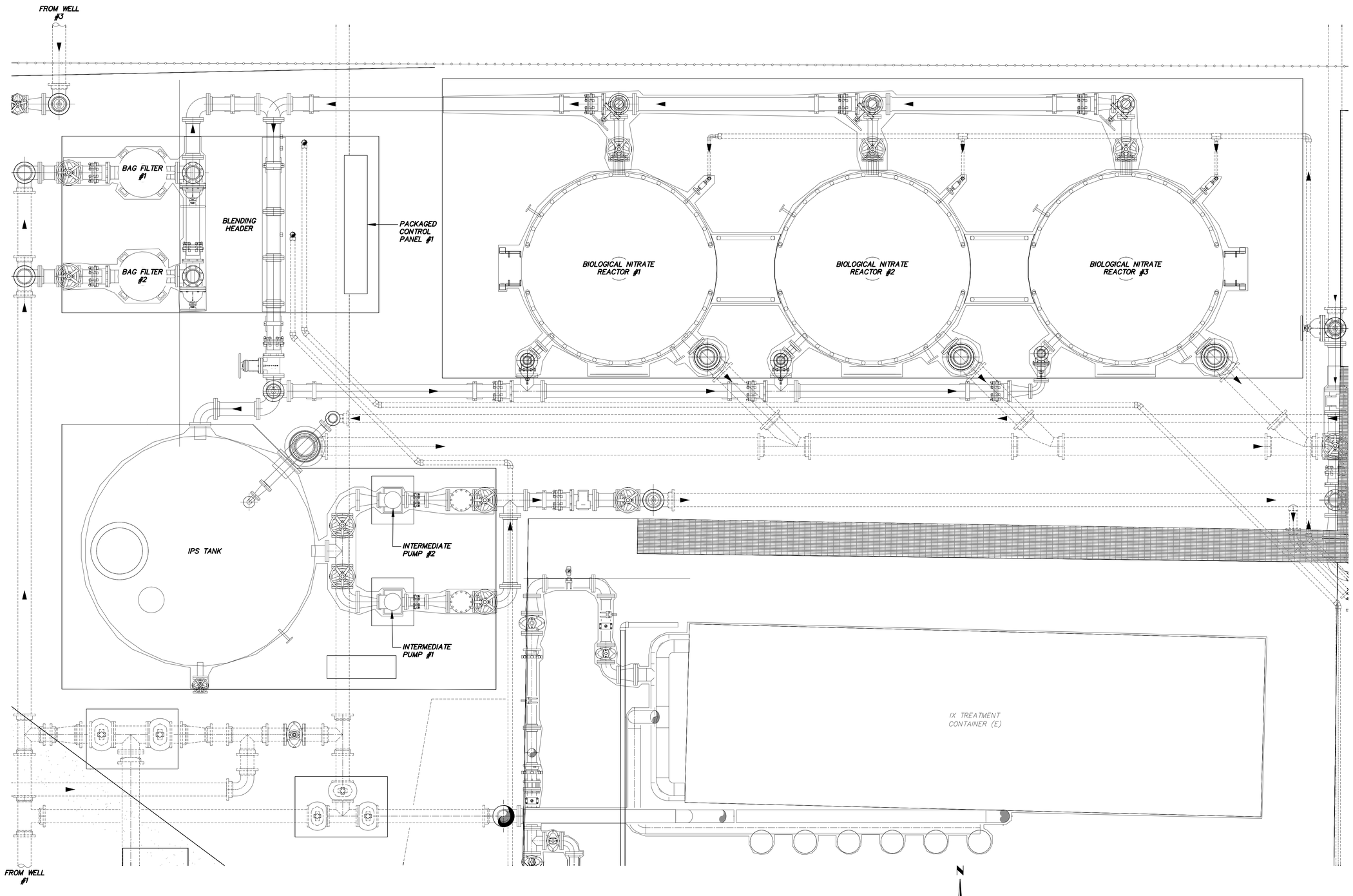

DARCOR ELECTRICAL CONSULTING ENGINEERS
22601 N. 17TH AVE.
SUITE 140
PHOENIX, AZ 85027
Ph: (602) 795-2699
WWW.DARCORINC.COM

consor

REVISIONS:

NO	DATE	BY	DESCRIPTION
A	10/03/25	FT	30% SUBMITTAL
B	12/12/25	FT	60% SUBMITTAL
C	03/09/26	FT	90% SUBMITTAL

The Installation shown is to be Installed In accordance with the Arizona Water Company standard specifications on file with the Arizona Department of Environmental Quality

Registered Professional Engineer (Civil)
CERTIFICATE NO. 53839
JORGE GERARDO
3/9/26
Date Signed
ARIZONA U.S.A.

W.A. No.:
P.E. No.:
SYSTEM:
LEGAL DESC.:
TAX DIST.:
SIB No.:
DATE: 3/9/2026
SCALE: N/A
DRAWN BY: ###
REVIEWED BY: ###
CHECKED BY: ###

ARIZONA WATER COMPANY
3805 N. BLACK CANYON HWY. POST OFFICE BOX 29006
PHOENIX, ARIZONA 85038-9006
(602) 240-6860

PROJECT DESC: STANFIELD GWS&T USBR GRANT COORDINATION

PROJECT SHEET DESC: NITRATE TREATMENT SYSTEM ENLARGED PLAN

DWG. No.: E-006

SHEET 65 OF 98

Drawing Path and Name: Z:\2025\25028-Consor (AWC Stanfield Wells 1 &3 Arsenic and Nitrate Treatment)\Drawings\25028-E6 (Enlarged Nitrate Treatment Plan View).dwg, Plotted Date: March 9, 2026 6:51 PM By: Tobias J. Wiley

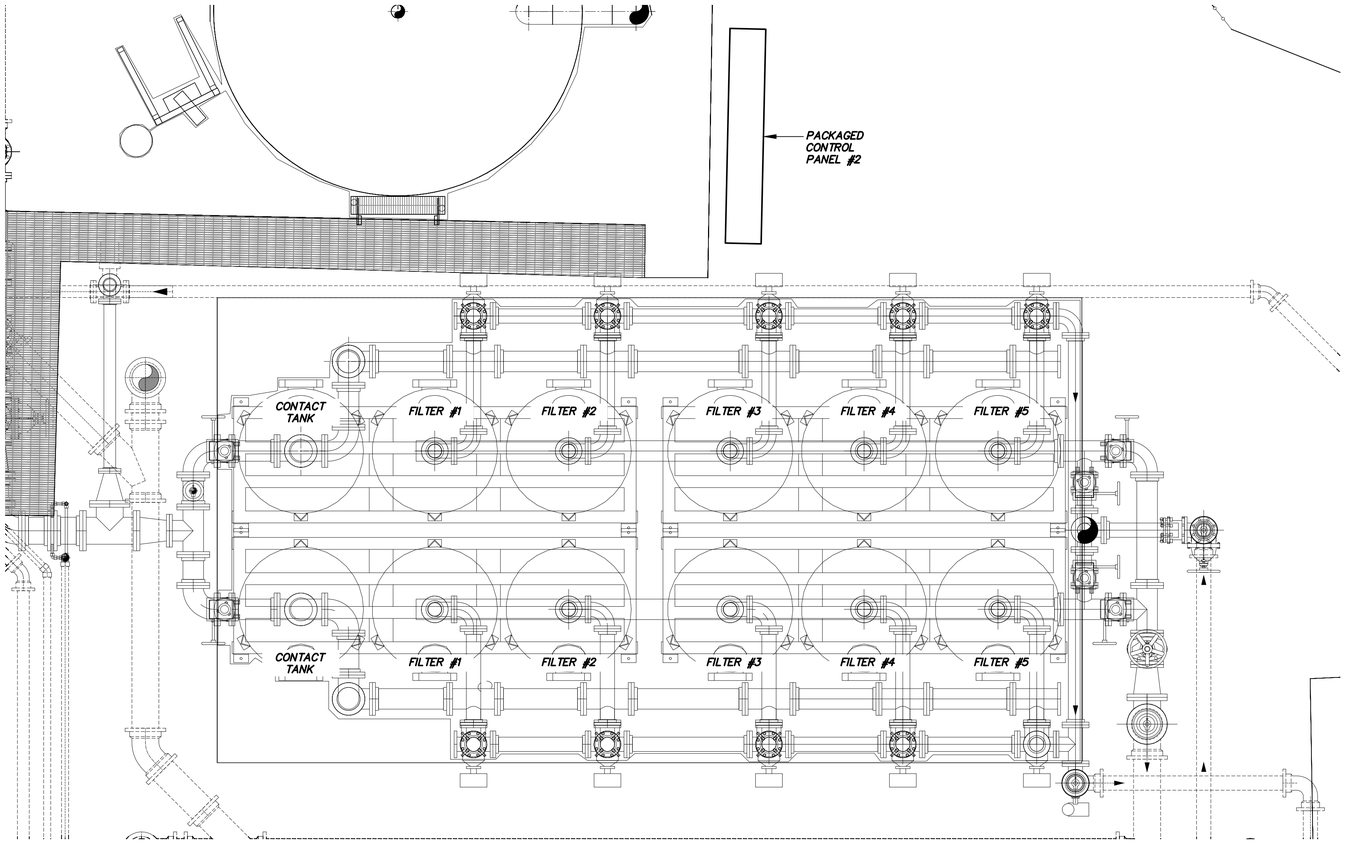

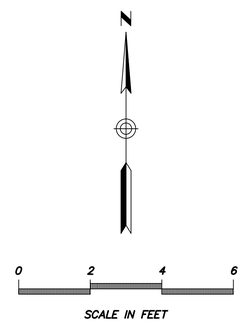

REVISIONS:

NO	DATE	BY	DESCRIPTION
A	10/03/25	FT	30% SUBMITTAL
B	12/12/25	FT	60% SUBMITTAL
C	03/09/26	FT	90% SUBMITTAL

The installation shown is to be installed in accordance with the Arizona Water Company standard specifications on file with the Arizona Department of Environmental Quality

Contact Arizona 811 at least two full working days before you begin excavation
ARIZONA
Call 811 or click Arizona811.com

W.A. No.:
P.E. No.:
SYSTEM:
LEGAL DESC.:
TAX DIST.:
SIB No.:
DATE: 3/9/2026
SCALE: N/A
DRAWN BY: ###
REVIEWED BY: ###
CHECKED BY: ###

ARIZONA WATER COMPANY
3805 N. BLACK CANYON HWY. POST OFFICE BOX 29006
PHOENIX, ARIZONA 85038-9006
(602) 240-6860

PROJECT DESC: STANFIELD GWS&T USBR GRANT COORDINATION

PROJECT SHEET DESC: ARSENIC TREATMENT FILTRATION SYSTEM ENLARGED PLAN

Registered Professional Engineer (Electrical)
CERTIFICATE NO. 53839
JORGE GERARDO
3/9/26
Date Signed
ARIZONA U.S.A.

DWG. No.: E-007

SHEET 66 OF 98

DARCOR
ELECTRICAL CONSULTING ENGINEERS
22601 N. 17TH AVE.
SUITE 140
PHOENIX, AZ 85027
Ph: (602) 795-2699
WWW.DARCORINC.COM

consor

Drawing Path and Name: Z:\2025\25028-Consor (AWC Stanfield Wells 1 &3 Arsenic and Nitrate Treatment)\Drawings\25028-E7 (Enlarged Arsenic Treatment Plan View).dwg, Plotted Date: March 9, 2026 6:51 PM By: Tobias J. Wiley

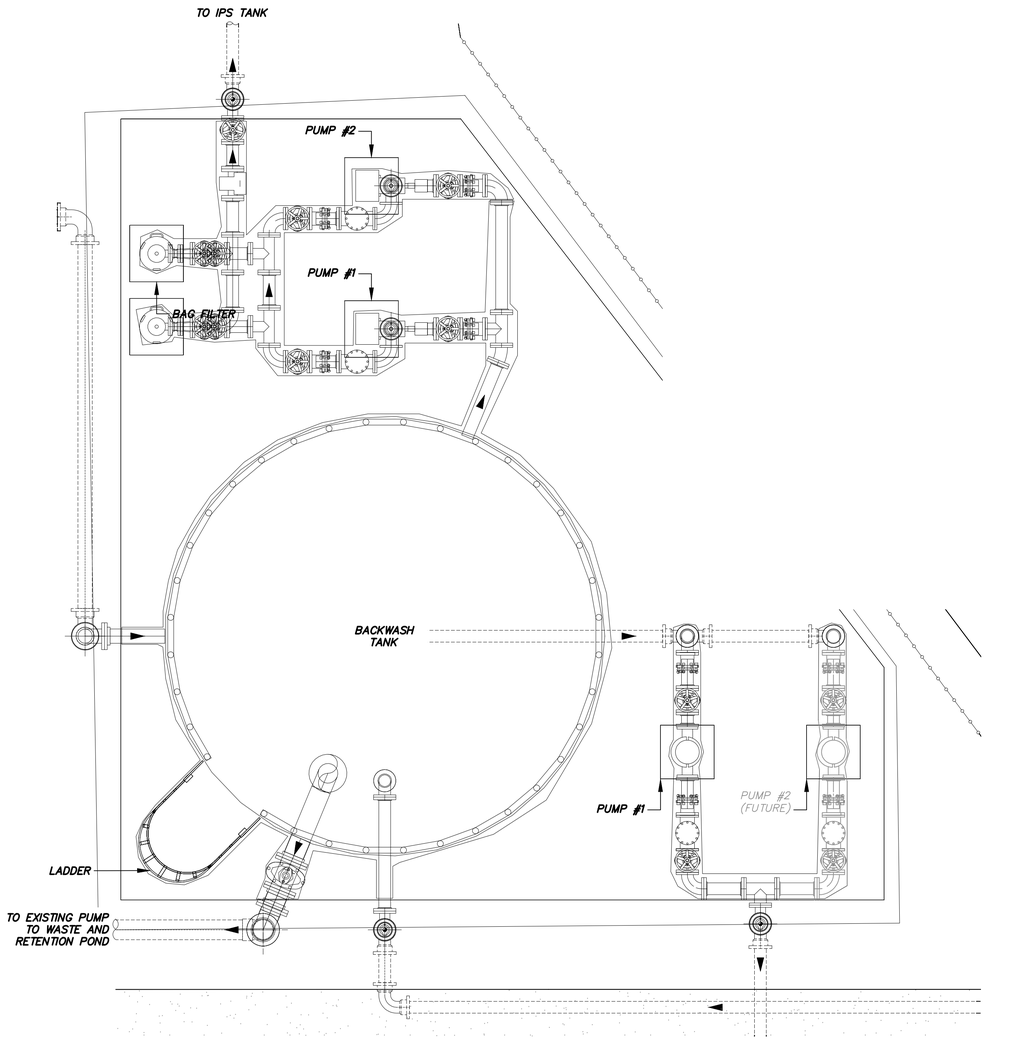

BACKWASH STATION ENLARGED PLAN VIEW

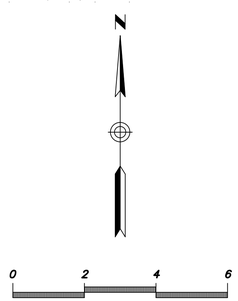

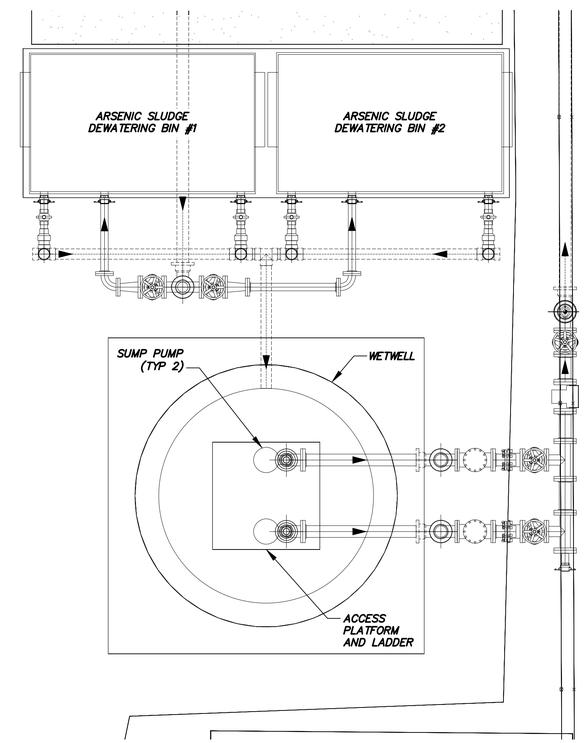

ARSENIC SLUDGE ENLARGED PLAN VIEW

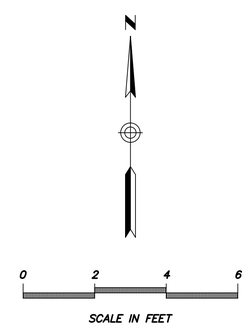

DARCOR ELECTRICAL CONSULTING ENGINEERS
22601 N. 17TH AVE.
SUITE 140
PHOENIX, AZ 85027
Ph: (602) 795-2599
WWW.DARCORINC.COM

consor

REVISIONS:

NO	DATE	BY	DESCRIPTION
A	10/03/25	FT	30% SUBMITTAL
B	12/12/25	FT	60% SUBMITTAL
C	03/09/26	FT	90% SUBMITTAL

The Installation shown is to be Installed In accordance with the Arizona Water Company standard specifications on file with the Arizona Department of Environmental Quality

Revised drawings BY: at least one hour working days before you start work, excavation

Call 8(1)1 or after (8)0(0)-782-5348

ARIZONA WATER COMPANY
3805 N. BLACK CANYON HWY. POST OFFICE BOX 29006
PHOENIX, ARIZONA 85038-9006
(602) 240-6860

W.A. No.:
SYSTEM:
LEGAL DESC.:
TAX DIST.:
SB No.:
P.E. No.:
PROJECT DESC.: STANFIELD GWS&T USBR GRANT COORDINATION
PROJECT SHEET DESC.: ENLARGED PLANS
DATE: 3/9/2026
SCALE: N/A
DRAWN BY: ###
REVIEWED BY: ###
CHECKED BY: ###

Registered Professional Engineer (Civil)
CERTIFICATE NO. 53839
JORGE GERARDO
3/9/26
Date Signed
ARIZONA, U.S.A.

DWG. No.: E-008

Drawing Path and Name: Z:\2025\25028-Consor (AWC Stanfield Wells 1 &3 Arsenic and Nitrate Treatment)\Drawings\25028-E8 (Enlarged Plan Views).dwg, Plotted Date: March 9, 2026 6:53 PM By: Tobias J. Wiley

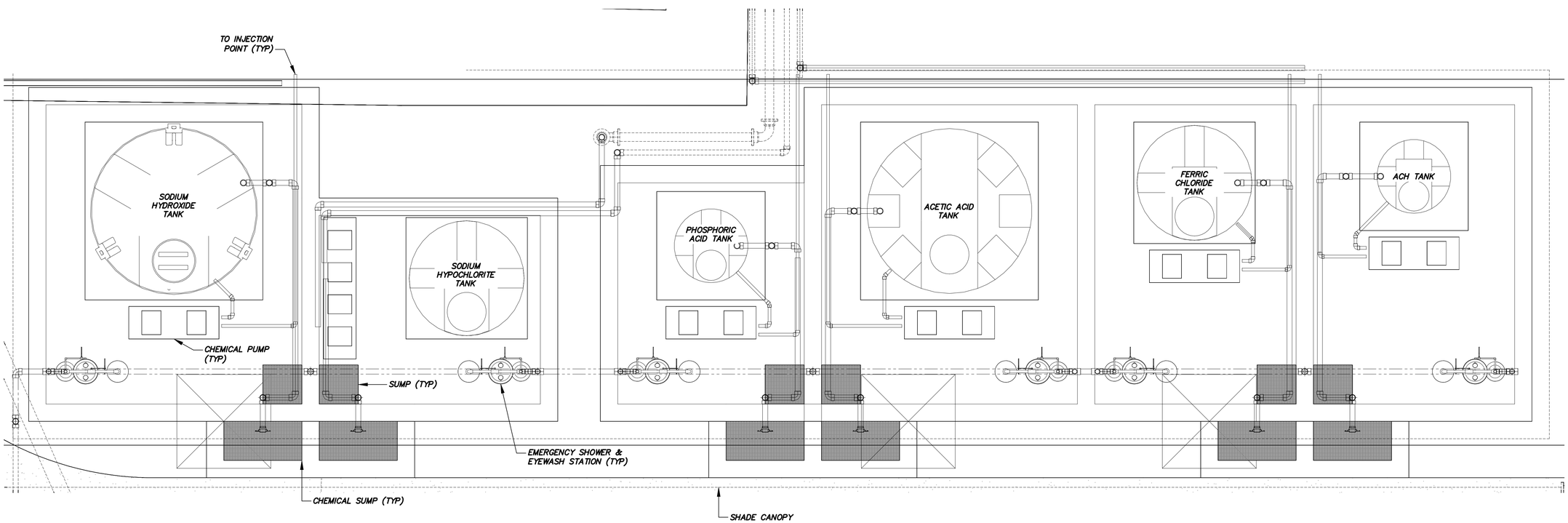

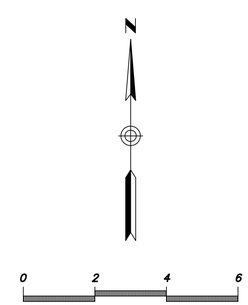

DARCOR ELECTRICAL CONSULTING ENGINEERS
22801 N. 17TH AVE.
SUITE 140
PHOENIX, AZ 85027
Ph: (602) 795-2699
WWW.DARCORINC.COM

consor

REVISIONS:

NO	DATE	BY	DESCRIPTION
A	10/03/25	FT	30% SUBMITTAL
B	12/12/25	FT	60% SUBMITTAL
C	03/09/26	FT	90% SUBMITTAL

The Installation shown is to be Installed In accordance with the Arizona Water Company standard specifications on file with the Arizona Department of Environmental Quality

Revised Arizona BTS at least one hour prior to digging, blasting or use of explosives. Call 811 or after hours (602) 271-4855

W.A. No.:
P.E. No.:
SYSTEM:
LEGAL DESC.:
TAX DIST.:
SIB No.:
DATE: 3/9/2026
SCALE: N/A
DRAWN BY: ###
REVIEWED BY: ###
CHECKED BY: ###

ARIZONA WATER COMPANY
3805 N. BLACK CANYON HWY. POST OFFICE BOX 29006
PHOENIX, ARIZONA 85038-9006
(602) 240-6860

PROJECT DESC.: STANFIELD GWS&T USBR GRANT COORDINATION
PROJECT SHEET DESC.: CHEMICAL STORAGE ENLARGED PLAN

Registered Professional Engineer (Electrical)
CERTIFICATE NO. 53839
JORGE GERARDO
3/9/26
Date Signed
ARIZONA U.S.A.

DWG. No.: E-009

Drawing Path and Name: Z:\2025\25028-Consor (AWC Stanfield Wells 1 &3 Arsenic and Nitrate Treatment)\Drawings\25028-E9 (Chemical Storage Enlarged Plan View).dwg, Plotted Date: March 9, 2026 6:53 PM By: Tobias J. Wiley

GENERAL NOTES

A. THE CHEMICAL FEED AREA IS CONSIDERED A CORROSIVE AREA. ALL ENCLOSURES, FITTINGS, ETC. SHALL BE 316SS OR PVC COATED RIGID STEEL, AND ALL BOXES SHALL BE PVC COATED OR NEMA 4X, UNLESS OTHERWISE INDICATED OR SPECIFIED.

B. CONDUITS SHALL BE INSTALLED UNDERGROUND AS MUCH AS POSSIBLE. CONDUITS SHALL NOT PENETRATE THE CONTAINMENT BASIN FLOOR. CONDUITS MUST STUBUP THROUGH CONCRETE PEDESTALS OR CURBS.

C. ALL EXPOSED CONDUITS SHALL BE PVC COATED GRS. CONDUIT SHALL BE SUPPORTED AS REQUIRED BY NEC.

D. FURNISH AND INSTALL 3/4" CONDUIT FITTINGS, PULL BOXES, ETC. AS REQUIRED FOR LUMINAIRES.

E. REFER TO THIS SHEET FOR LUMINAIRE SCHEDULE.

F. REFER TO DRAWING E-005 FOR PANEL SCHEDULE.

G. REFER TO CONDUIT BLOCK DIAGRAMS ON DRAWINGS E-012 THRU E-014 FOR CONDUIT & CONDUCTOR REQUIREMENTS.

KEY NOTES

1. INSTALL 120V, 20A, SPST LIGHT SWITCH AND 120V, 20A, GFCI TYPE DUPLEX RECEPTACLE IN PVC COATED "FD" TYPE BOX AT +48" AFG WITH WP AND WHILE-IN-USE COVERS RESPECTIVELY.

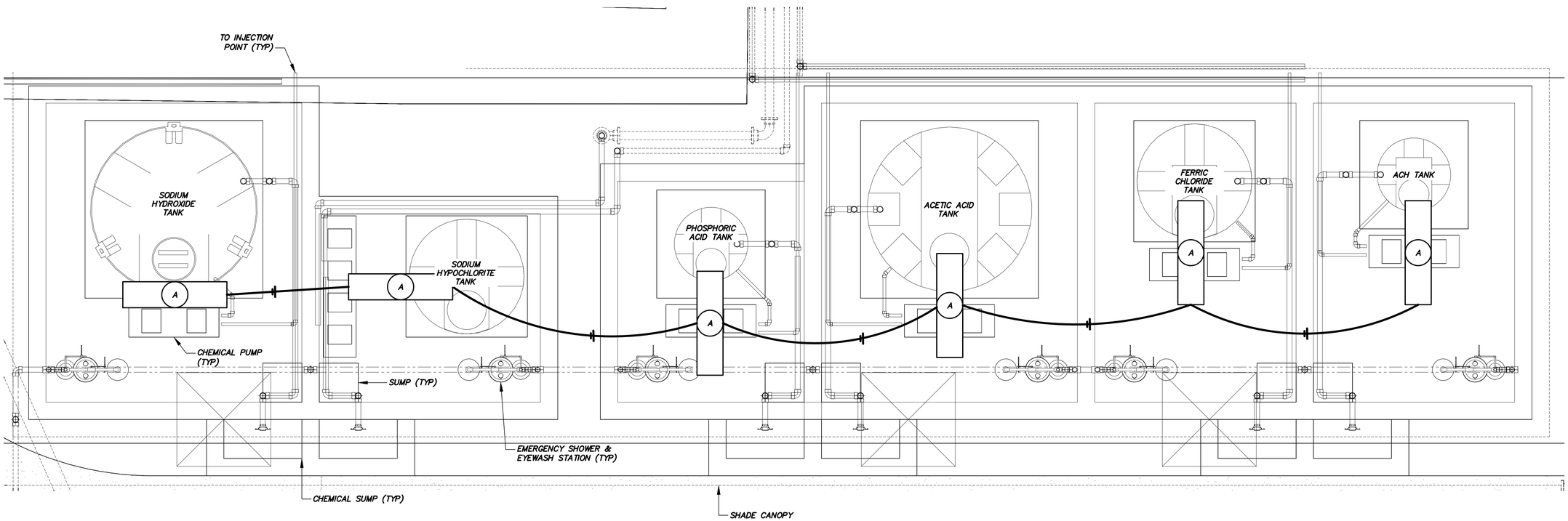

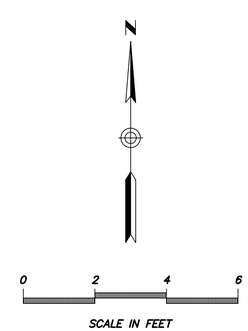

LUMINAIRE SCHEDULE

SYMBOL	VOLTS	LEDs	LUMENS	DESCRIPTION	MANUFACTURER
(A) EM	120	LED 400K	6,000	48" SEALED AND GASKETED VAPORTIGHT CEILING MOUNTED LED, 4000K, MEDIUM DISTRIBUTION WITH HIGH IMPACT LENS. RATED FOR WET LOCATIONS WITH STAINLESS STEEL LATCHES. "EM" DENOTES LUMINAIRE TO INCLUDE AN EMERGENCY BATTERY PACK.	COOPER METALUX MODEL 4VT2
B	120	LED 4000K	6,000	AREA LIGHTING LUMINAIRE, FULLY GASKETED EXTRUDED ALUMINUM HOUSING, BRONZE THERMOSET POLYESTER POWDER COAT FINISH, IES TYPE V DISTRIBUTION PATTERN, UL LISTED FOR WET LOCATIONS.	VISIONAIRE LIGHTING MODEL EL2 COOPER LIGHTING MODEL VTS PHILLIPS/GARDCO MODEL P21

DARCOR ELECTRICAL CONSULTING ENGINEERS
22601 N. 17TH AVE.
SUITE 140
PHOENIX, AZ 85027
Ph: (602) 795-2699
WWW.DARCORINC.COM

consor

REVISIONS:

NO	DATE	BY	DESCRIPTION
A	10/03/25	FT	30% SUBMITTAL
B	12/12/25	FT	60% SUBMITTAL
C	03/09/26	FT	90% SUBMITTAL

The Installation shown is to be Installed In accordance with the Arizona Water Company standard specifications on file with the Arizona Department of Environmental Quality

Required Authorizations BY:
Contact Blue Stake, Inc. at 1-(800)-782-5348 for utility locations.
Call 811 or affect Arizona811.com

W.A. No.:
SYSTEM:
LEGAL DESC.:
TAX DIST.:
DATE: 3/9/2026
DRAWN BY: MV
REVIEWED BY: VC
CHECKED BY: JLG
SCALE: N/A
SB No.:
P.E. No.:

ARIZONA WATER COMPANY
3805 N. BLACK CANYON HWY. POST OFFICE BOX 29006
PHOENIX, ARIZONA 85038-9006
(602) 240-6860

PROJECT DESC: STANFIELD GWS&T USBR GRANT COORDINATION

PROJECT SHEET DESC: ENLARGED LIGHTING PLAN VIEWS - I

Registered Professional Engineer (Electrical) CERTIFICATE NO. 53839 JORGE GERARDO 3/9/26 Date Signed ARIZONA U.S.A.

DWG. No.: E-010

Drawing Path and Name: Z:\2025\25028-Consor (AWC Stanfield Wells 1 &3 Arsenic and Nitrate Treatment)\Drawings\25028-E10 (Enlarged Lighting Plan Views).dwg, Plotted Date: March 9, 2026 6:53 PM By: Tobias J. Wiley

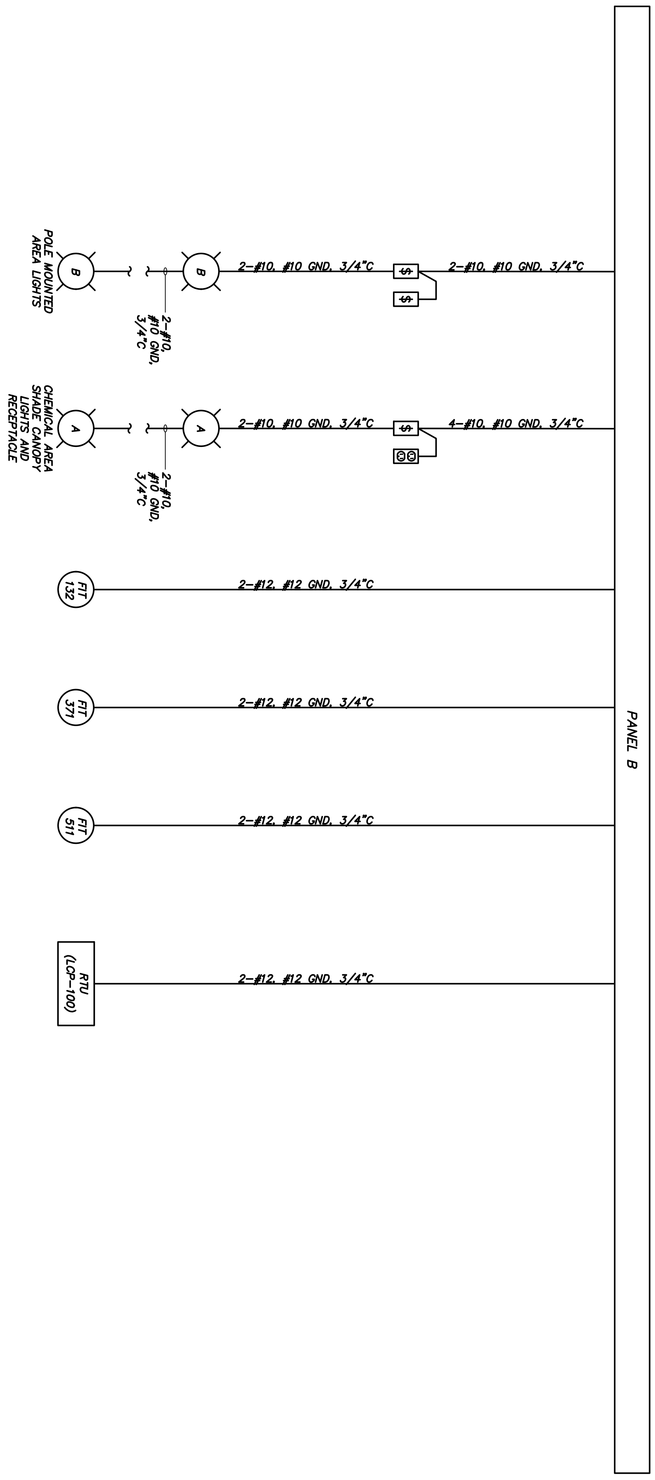

DARCOR
ELECTRICAL CONSULTING ENGINEERS
2020 N. 14TH AVE.
SUITE 140
PHOENIX, AZ 85007
(602) 252-5060
FAX (602) 252-5066
WWW.DARCORENG.COM

consor

DWG. No.: E-011

SHEET 70 OF 98

Registered Professional Engineer (Electrical)
CERTIFICATE NO. 53539
VINCENT CONNOR
3/9/26
ARIZONA, U.S.A.

ARIZONA WATER COMPANY
3805 N. BLACK CANYON HWY. POST OFFICE BOX 29006
PHOENIX, ARIZONA 85038-9006
(602) 240-6860

PROJECT DESC: STANFIELD GWS&T USBR GRANT COORDINATION

PROJECT SHEET DESC: CONDUIT BLOCK DIAGRAM - I

W.A. No.:	P.E. No.:
SYSTEM:	
LEGAL DESC.:	
TAX DIST.:	SIB No.:
DATE: 3/9/2026	SCALE: N/A
DRAWN BY: MV	REVIEWED BY: VC
CHECKED BY: JLG	

The installation shown is to be installed in accordance with the Arizona Water Company standard specifications on file with the Arizona Department of Environmental Quality

Contact Arizona 811 at least two full working days before you begin excavation
ARIZONA 811
Call 811 or click Arizona811.com

REVISIONS:

NO	DATE	BY	DESCRIPTION
A	10/03/25	FT	30% SUBMITTAL
B	12/12/25	FT	60% SUBMITTAL
C	03/09/26	FT	90% SUBMITTAL

Drawing Path and Name: Z:\2025\25028 Consor (AWC Stanfield Wells 1 & 3 Arsenic and Nitrate Treatment)\Drawings\25028-E11 (CBD Power).dwg, Plotted Date: March 9, 2026 7:32 PM By: jgarcia

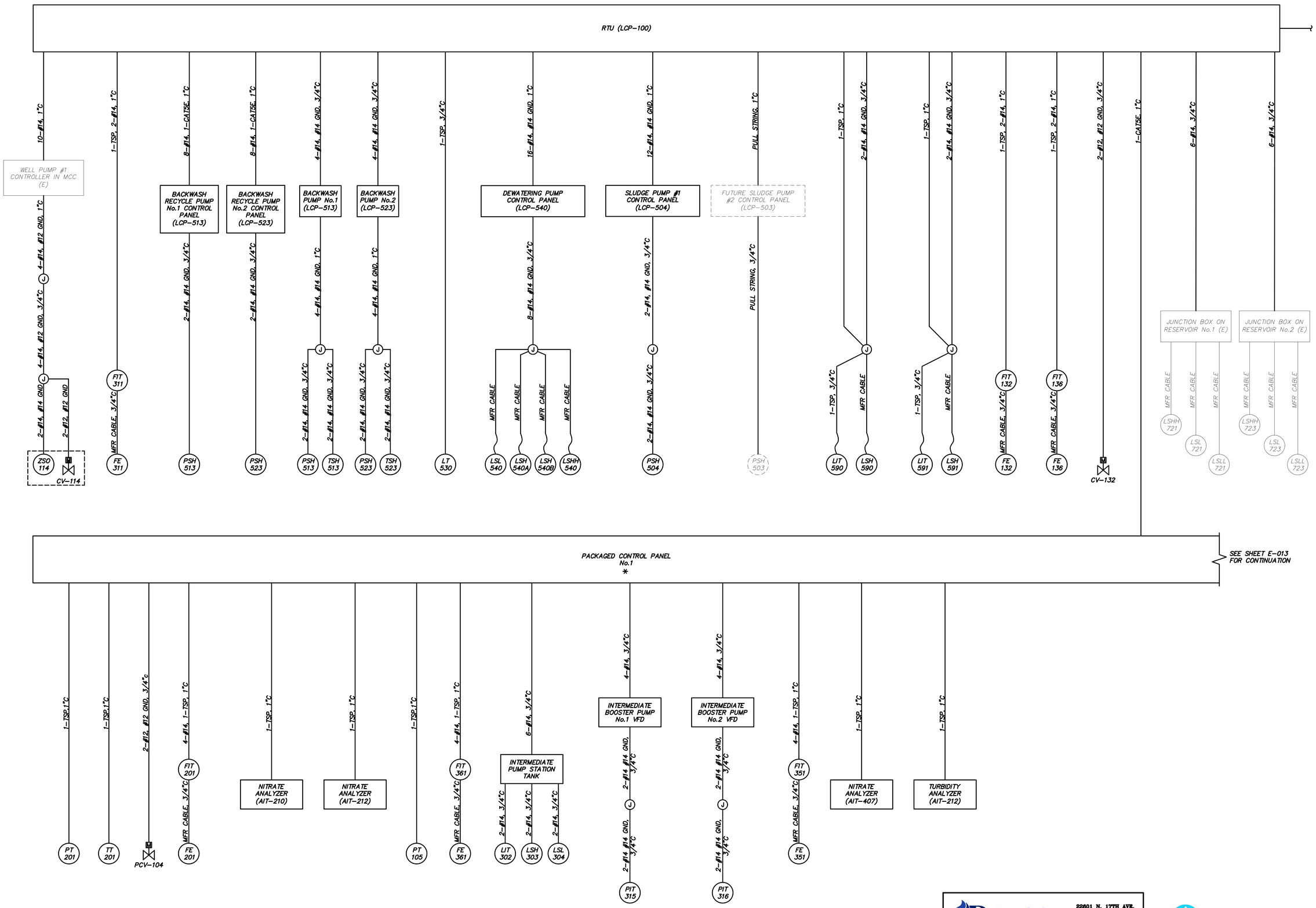

DARCOR ELECTRICAL CONSULTING ENGINEERS
22601 N. 17TH AVE. SUITE 140 PHOENIX, AZ 85027
Ph: (602) 795-2699 WWW.DARCORINC.COM

consor

REVISIONS:

NO	DATE	BY	DESCRIPTION
A	10/03/25	FT	30% SUBMITTAL
B	12/12/25	FT	60% SUBMITTAL
C	03/09/26	FT	90% SUBMITTAL

The Installation shown is to be Installed In accordance with the Arizona Water Company standard specifications on file with the Arizona Department of Environmental Quality

Required to Arizona 811 at least two full working days before you start any excavation. Call 811 or after hours 602-271-4844

W.A. No.:
P.E. No.:
SYSTEM#:
LEGAL DESC.:
TAX DIST.:
SIB No.:
DATE: 3/9/2026
SCALE: N/A
DRAWN BY: MV
REVIEWED BY: VC
CHECKED BY: JLG

ARIZONA WATER COMPANY
3805 N. BLACK CANYON HWY. POST OFFICE BOX 29006
PHOENIX, ARIZONA 85038-9006
(602) 240-6860

PROJECT DESC: STANFIELD GWS&T USBR GRANT COORDINATION
PROJECT SHEET DESC: CONDUIT BLOCK DIAGRAM - I

Registered Professional Engineer (Civil)
CERTIFICATE NO. 53839
JORGE GERARDO
3/9/26
Date Signed
ARIZONA U.S.A.

DWG. No.: E-012

Drawing Path and Name: Z:\2025\25028-Consor (AWC Stanfield Wells 1 &3 Arsenic and Nitrate Treatment)\Drawings\25028-E12 (CBD Control - I).dwg, Plotted Date: March 9, 2026 6:53 PM By: Tobias J. Wiley

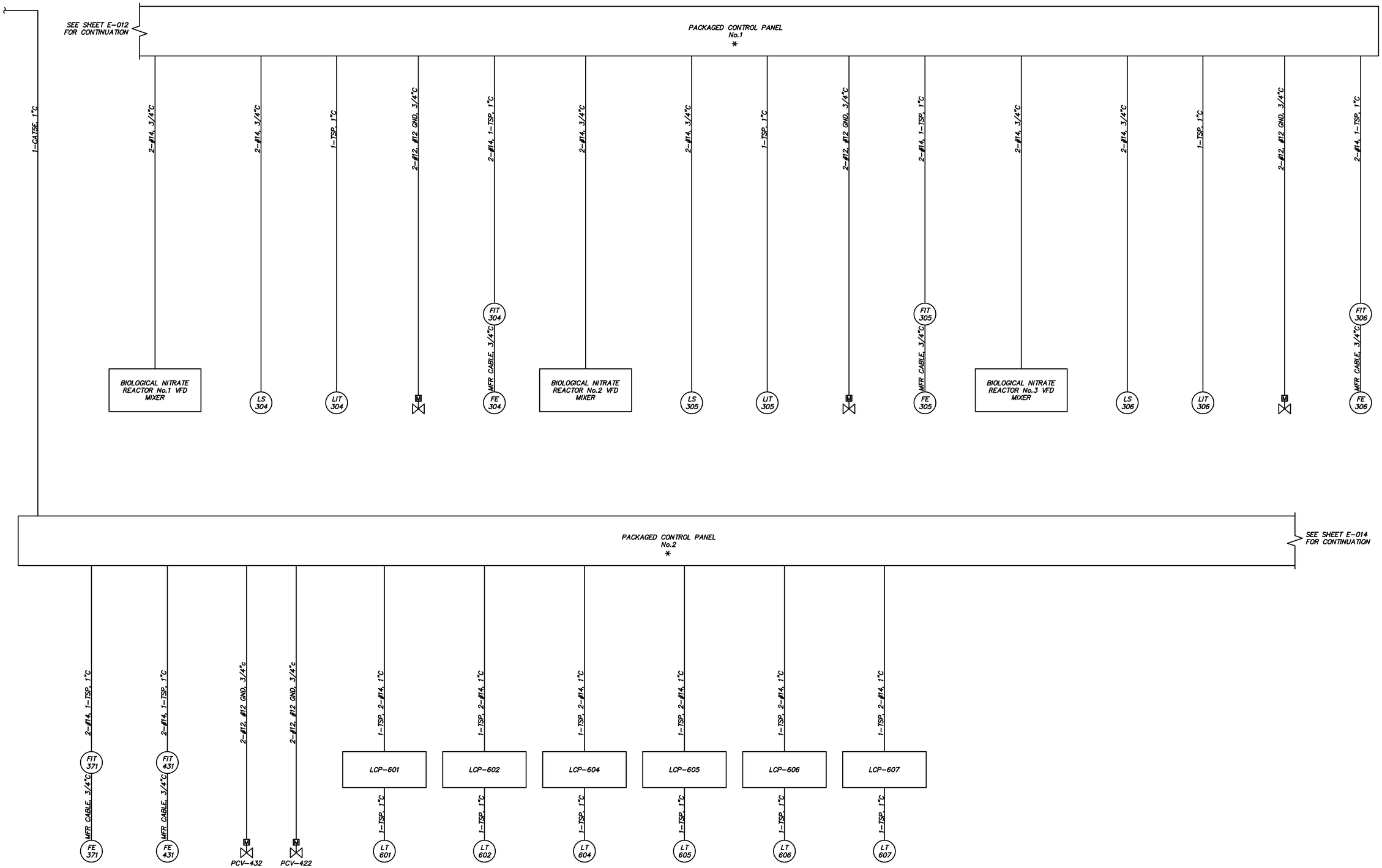

REVISIONS:

NO	DATE	BY	DESCRIPTION
A	10/03/25	FT	30% SUBMITTAL
B	12/12/25	FT	60% SUBMITTAL
C	03/09/26	FT	90% SUBMITTAL

The Installation shown is to be Installed In accordance with the Arizona Water Company standard specifications on file with the Arizona Department of Environmental Quality

Received & Stamped EFF's all based upon field verified as-built drawings and actual field measurements.

Built 8/01 as-built information by Lumco

W.A. No.:
P.E. No.:
SYSTEM:
LEGAL DESC.:
TAX DIST.:
SIB No.:
DATE: 3/9/2026
SCALE: N/A
DRAWN BY: MV
REVIEWED BY: VC
CHECKED BY: JLG

ARIZONA WATER COMPANY
3805 N. BLACK CANYON HWY. POST OFFICE BOX 29006
PHOENIX, ARIZONA 85038-9006
(602) 240-6860

PROJECT DESC: STANFIELD GWS&T USBR GRANT COORDINATION

PROJECT SHEET DESC: CONDUIT BLOCK DIAGRAM - II

Registered Professional Engineer (Electrical) CERTIFICATE NO. 53839 JORGE GERARDO 3/9/26 Date Signed ARIZONA, U.S.A.

DARCOR ELECTRICAL CONSULTING ENGINEERS
22601 N. 17TH AVE. SUITE 140 PHOENIX, AZ 85027 Ph: (602) 795-2699 WWW.DARCORINC.COM

consor

DWG. No.: E-013

Drawing Path and Name: Z:\2025\25028-Consor (AWC Stanfield Wells 1 &3 Arsenic and Nitrate Treatment)\Drawings\25028-E13 (CBD Control - II).dwg, Plotted Date: March 9, 2026 6:53 PM By: Tobias J. Wiley

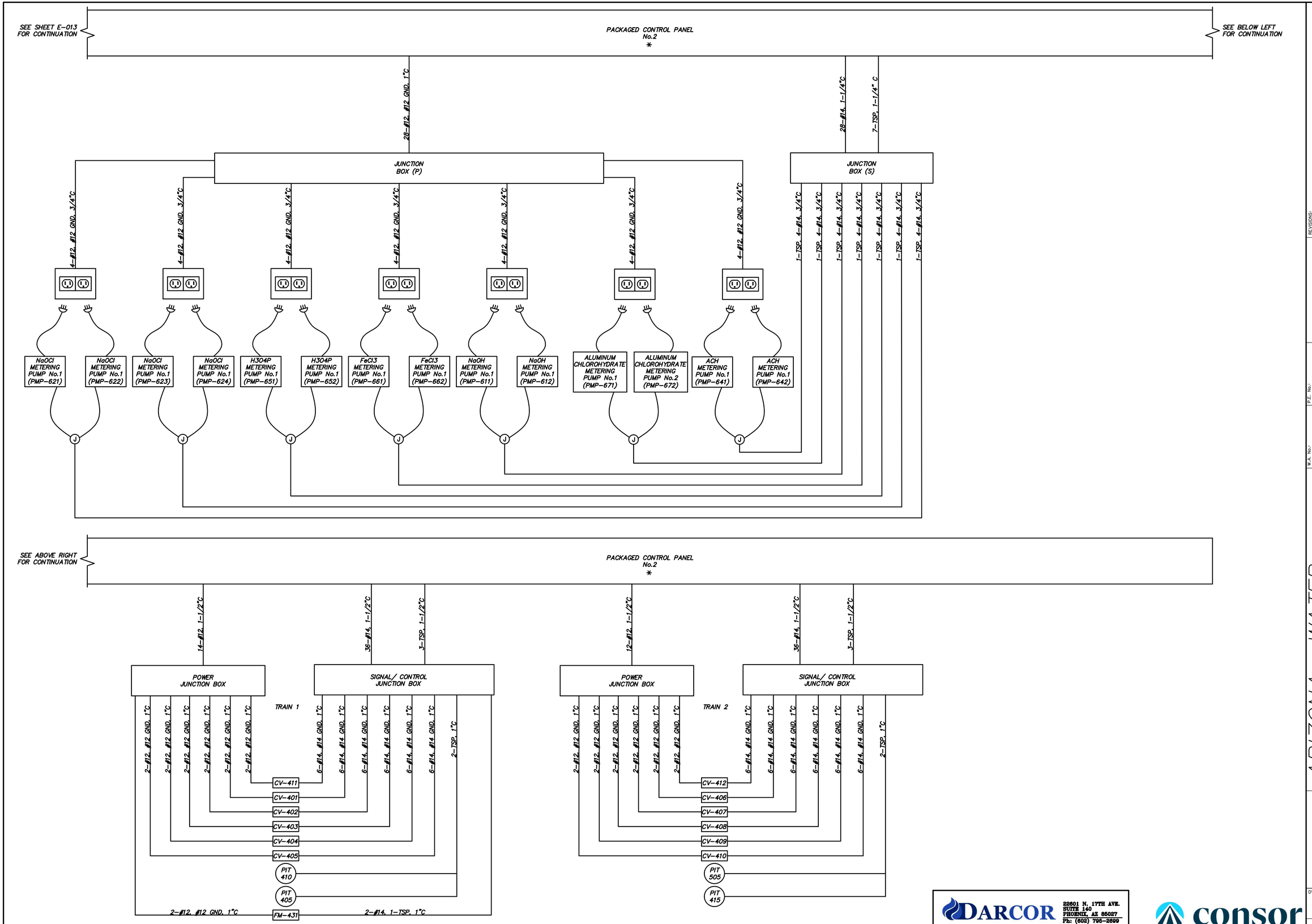

DARCOR ELECTRICAL CONSULTING ENGINEERS
22601 N. 17TH AVE. SUITE 140 PHOENIX, AZ 85027
Ph: (602) 795-2599 WWW.DARCORINC.COM

consor

REVISIONS:

NO	DATE	BY	DESCRIPTION
A	10/03/25	FT	30% SUBMITTAL
B	12/12/25	FT	60% SUBMITTAL
C	03/09/26	FT	90% SUBMITTAL

The Installation shown is to be Installed In accordance with the Arizona Water Company standard specifications on file with the Arizona Department of Environmental Quality

Required drawings 811 or blue line tape, markings, and locates must be present when excavating. Call 811 or effect Arizona811.com

W.A. No.:
P.E. No.:
SYSTEM:
LEGAL DESC.:
TAX DIST.:
SBI No.:
DATE: 3/9/2026
SCALE: N/A
DRAWN BY: MV
REVIEWED BY: VC
CHECKED BY: JLG

ARIZONA WATER COMPANY
3805 N. BLACK CANYON HWY. PHOENIX, ARIZONA 85039-8006
POST OFFICE BOX 29006
(602) 240-6860

PROJECT DESC: STANFIELD GWS&T USBR GRANT COORDINATION
PROJECT SHEET DESC: CONDUIT BLOCK DIAGRAM - III

Registered Professional Engineer (Electrical) CERTIFICATE NO. 53839 JORGE GERARDO 3/9/26 Date Signed ARIZONA U.S.A.

DWG. No.: E-014
SHEET 73 OF 98

Drawing Path and Name: Z:\2025\25028-Consor (AWC Stanfield Wells 1 &3 Arsenic and Nitrate Treatment)\Drawings\25028-E14 (CBD Control - III).dwg, Plotted Date: March 9, 2026 6:54 PM By: Tobias J. Wiley

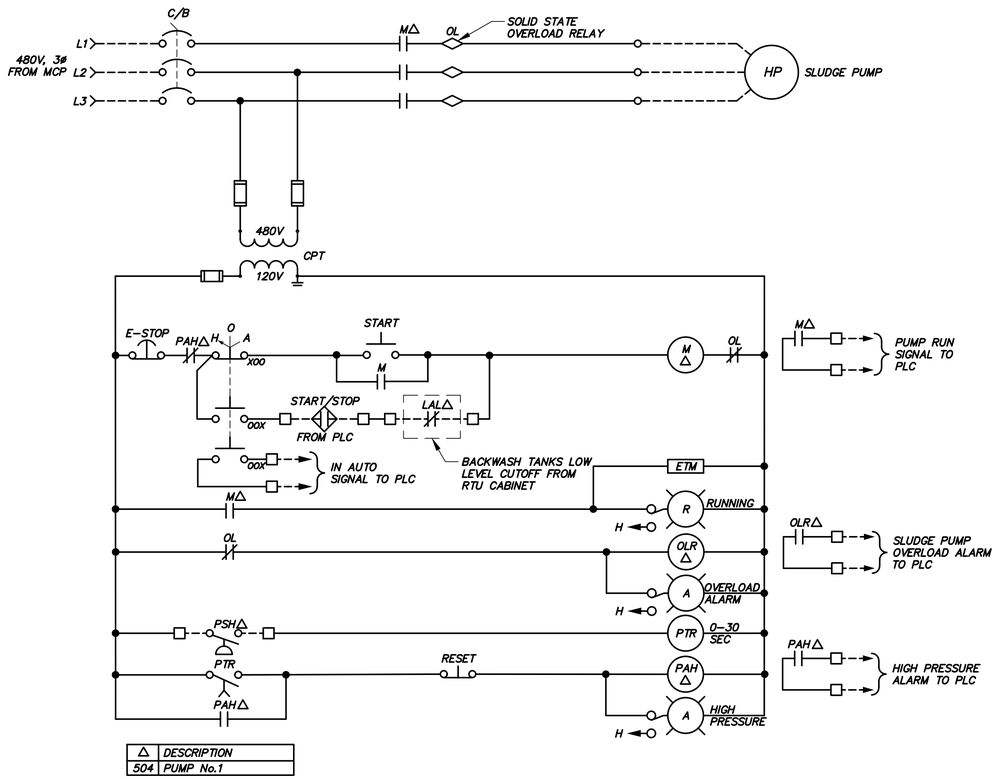

△	DESCRIPTION
504	PUMP No.1

SLUDGE PUMP MOTOR CONTROL SCHEMATIC

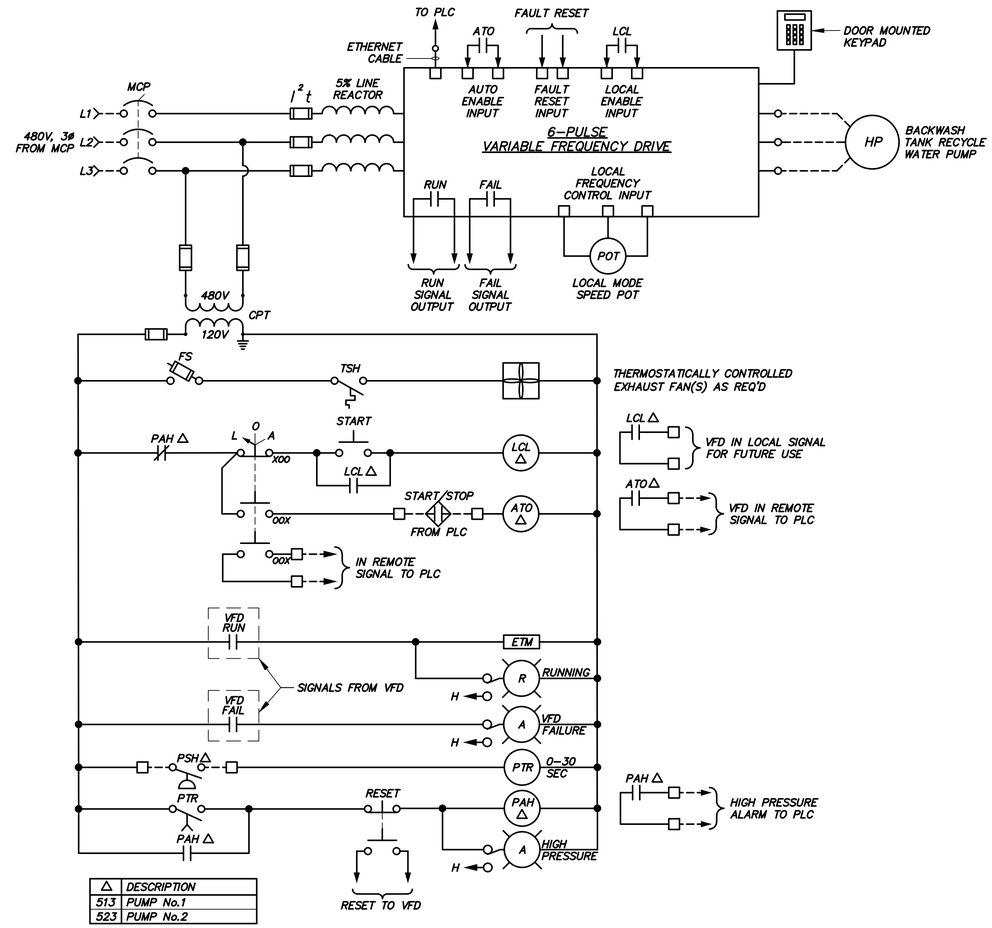

△	DESCRIPTION
513	PUMP No.1
523	PUMP No.2

BACKWASH RECYCLE PUMP VFD MOTOR CONTROL SCHEMATIC

REVISIONS:			
NO	DATE	BY	DESCRIPTION
A	10/03/25	FT	30% SUBMITTAL
B	12/12/25	FT	60% SUBMITTAL
C	03/09/26	FT	90% SUBMITTAL

The Installation shown is to be Installed In accordance with the Arizona Water Company standard specifications on file with the Arizona Department of Environmental Quality

Revised drawings BY: ET shall have that title, contains, date, and revision number.

Shall BEAR an official Arizona Water Company Seal.

W.A. No.:
SYSTEM:
LEGAL DESC.:
TAX DIST.:
DATE: 3/9/2026
DRAWN BY: MV
P.E. No.:
SB No.:
SCALE: N/A
REVIEWED BY: VC
CHECKED BY: JLG

ARIZONA WATER COMPANY
3805 N. BLACK CANYON HWY. POST OFFICE BOX 29006
PHOENIX, ARIZONA 85038-9006
(602) 240-6860

PROJECT DESC: STANFIELD GWS&T USBR GRANT COORDINATION

PROJECT SHEET DESC: CONTROL SCHEMATICS - I

Registered Professional Engineer (Electrical) CERTIFICATE NO. 53839 JORGE GERARDO 3/9/26 Date Signed ARIZONA, U.S.A.

DWG. No.: E-015

DARCOR ELECTRICAL CONSULTING ENGINEERS
22601 N. 17TH AVE. SUITE 140 PHOENIX, AZ 85027
Ph: (602) 795-2699 WWW.DARCORINC.COM

consor

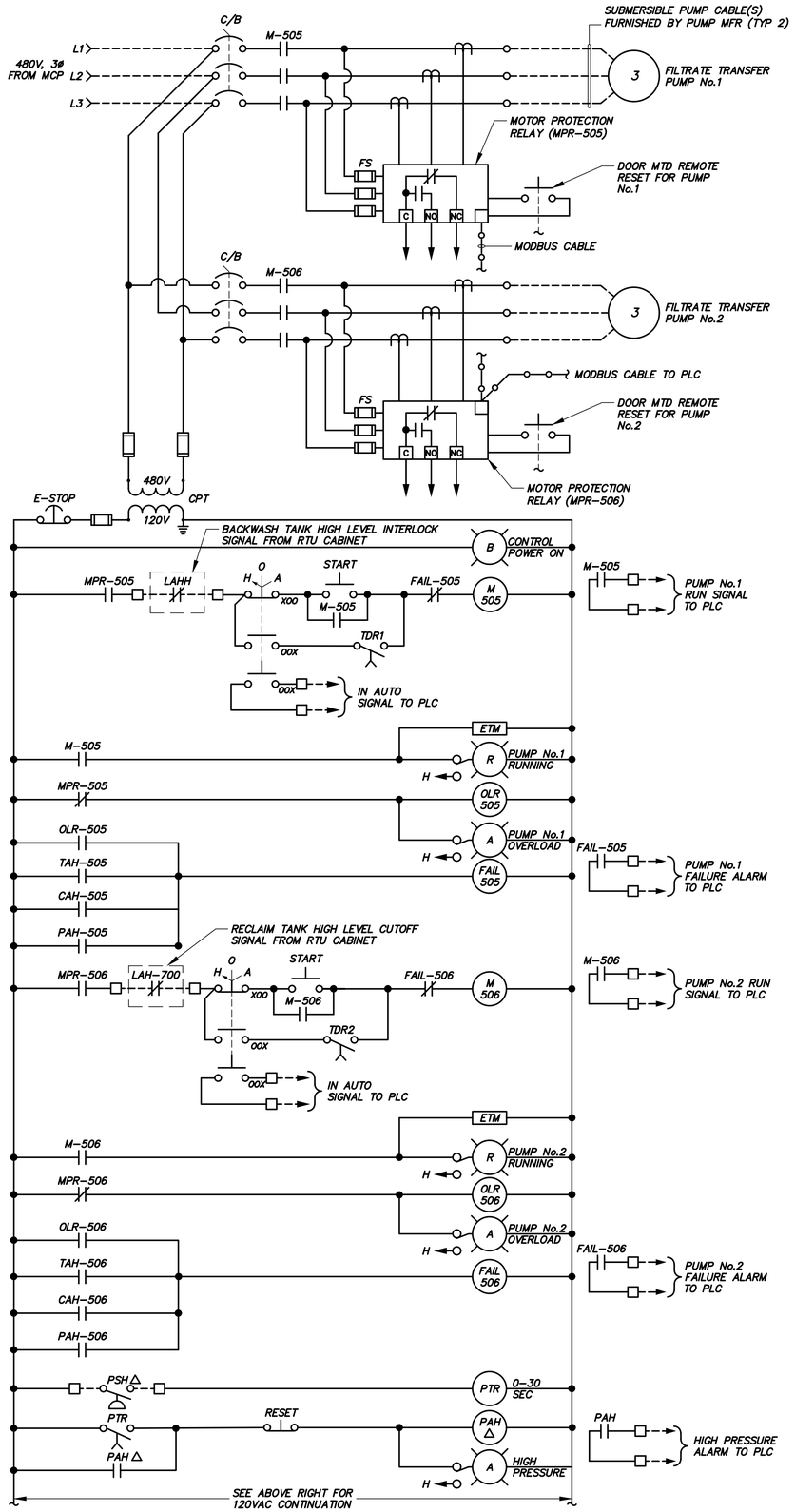

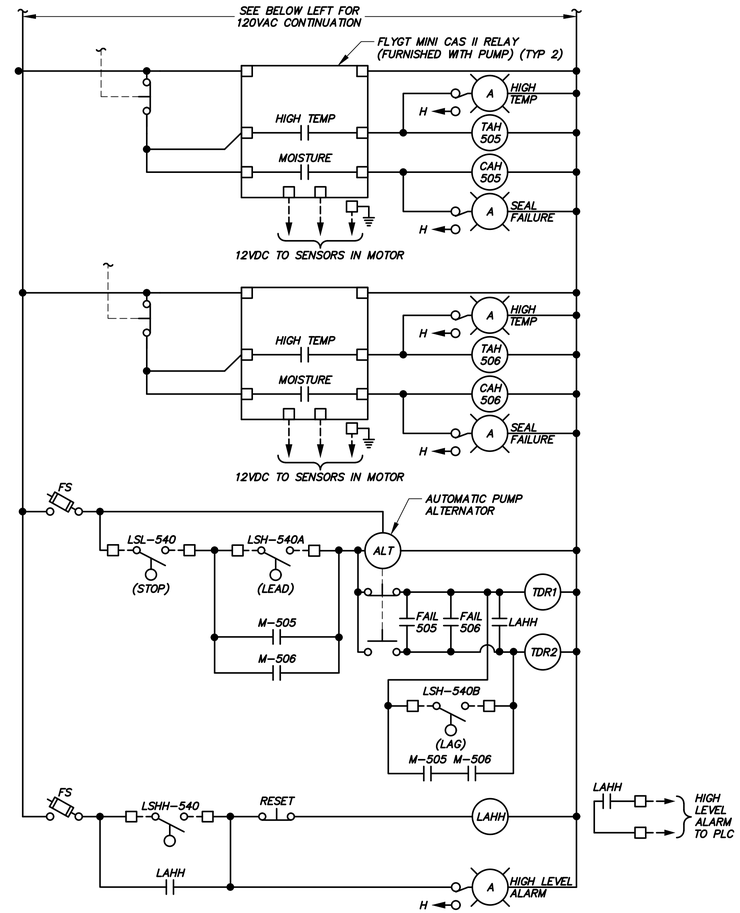

DUPLEX DEWATERING PUMP CONTROL PANEL SCHEMATIC

NO	DATE	BY	DESCRIPTION
A	10/03/25	FT	30% SUBMITTAL
B	12/12/25	FT	60% SUBMITTAL
C	03/09/26	FT	90% SUBMITTAL

REVISIONS:

The Installation shown is to be Installed In accordance with the Arizona Water Company standard specifications on file with the Arizona Department of Environmental Quality

P.E. No.:
W.A. No.:
SYSTEM:
LEGAL DESC.:
TAX DIST.:
SBI No.:
DATE: 3/9/2026
SCALE: N/A
DRAWN BY: MV
REVIEWED BY: VC
CHECKED BY: JLG

ARIZONA WATER COMPANY
3805 N. BLACK CANYON HWY. POST OFFICE BOX 29006
PHOENIX, ARIZONA 85038-9006
(602) 240-6860

PROJECT DESC: STANFIELD GWS&T USBR GRANT COORDINATION
PROJECT SHEET DESC: CONTROL SCHEMATICS - II

Registered Professional Engineer (Electrical) CERTIFICATE NO. 53839 JORGE GERARDO 3/9/26 Date Signed ARIZONA, U.S.A.

DWG. No.: E-016

SHEET 75 OF 98

DARCOR ELECTRICAL CONSULTING ENGINEERS
22601 N. 17TH AVE. SUITE 140 PHOENIX, AZ 85027 Ph: (602) 795-2699 WWW.DARCORINC.COM

consor

Drawing Path and Name: Z:\2025\25028-Consor (AWC Stanfield Wells 1 &3 Arsenic and Nitrate Treatment)\Drawings\25028-E16 (Control Schematics - II).dwg, Plotted Date: March 9, 2026 6:54 PM By: Tobias J. Wiley

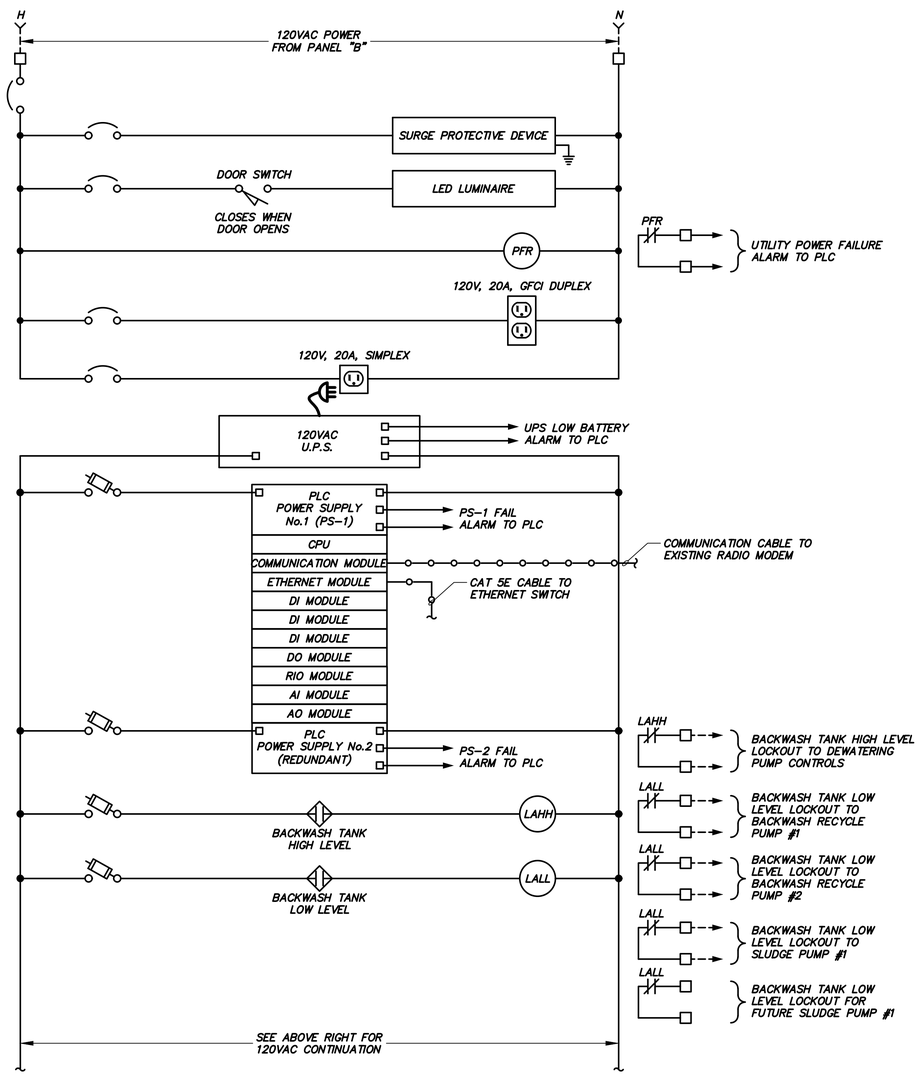

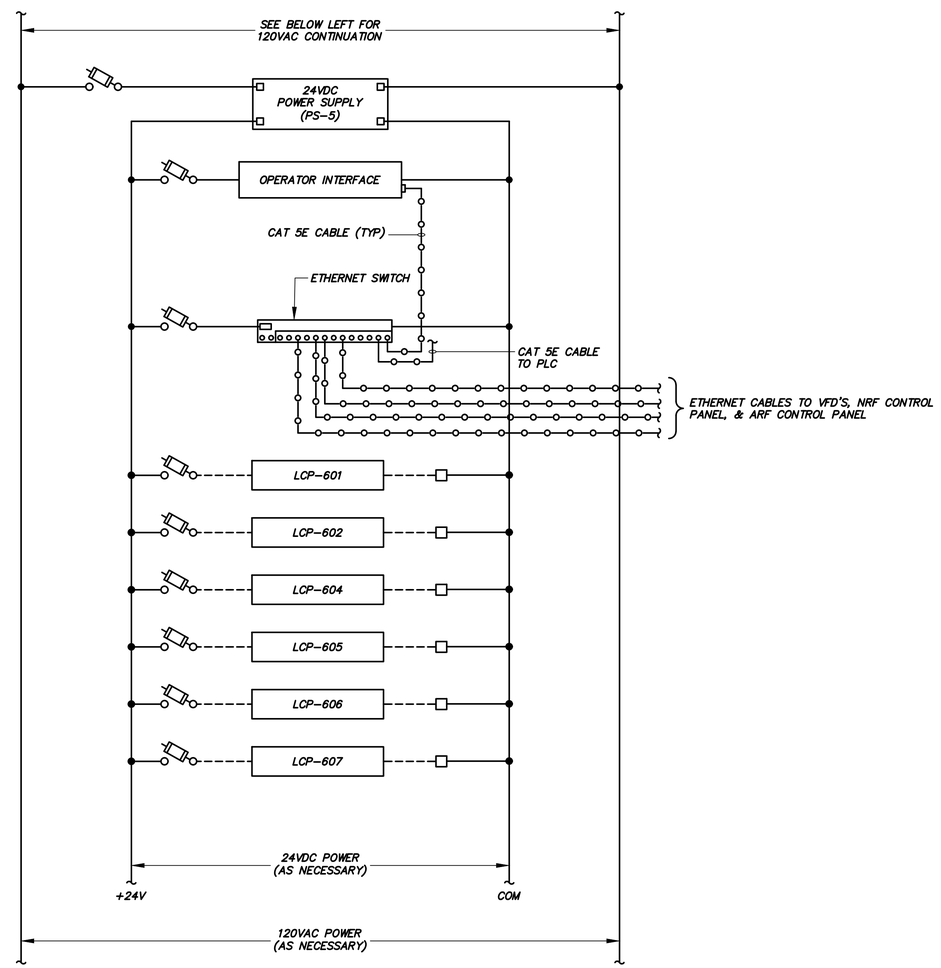

NOTE: REFER TO P&ID SHEETS FOR I/O REQUIREMENTS

RTU CONTROL PANEL SCHEMATIC

REVISIONS:			
NO	DATE	BY	DESCRIPTION
A	10/03/25	FT	30% SUBMITTAL
B	12/12/25	FT	60% SUBMITTAL
C	03/09/26	FT	90% SUBMITTAL

The Installation shown is to be Installed In accordance with the Arizona Water Company standard specifications on file with the Arizona Department of Environmental Quality

Revised Drawings BY: at least one full working day before work commences. Call 811 or after hours (602)263-6271, Arizona

W.A. No.:
SYSTEM:
LEGAL DESC.:
TAX DIST.:
DATE: 3/9/2026
DRAWN BY: MV
P.E. No.:
SB No.:
SCALE: N/A
REVIEWED BY: VC
CHECKED BY: JLG

ARIZONA WATER COMPANY
3805 N. BLACK CANYON HWY. POST OFFICE BOX 29006
PHOENIX, ARIZONA 85038-9006
(602) 240-6860

PROJECT DESC: STANFIELD GWS&T USBR GRANT COORDINATION
PROJECT SHEET DESC: CONTROL SCHEMATICS - III

Registered Professional Engineer (Electrical) CERTIFICATE NO. 53839 JORGE GERARDO 3/9/26 Date Signed ARIZONA U.S.A.

DARCOR ELECTRICAL CONSULTING ENGINEERS
22601 N. 17TH AVE. SUITE 140 PHOENIX, AZ 85027 Ph: (602) 795-2699 WWW.DARCORINC.COM

consor

DWG. No.: E-017
SHEET 76 OF 98

Drawing Path and Name: Z:\2025\25028-Consor (AWC Stanfield Wells 1 &3 Arsenic and Nitrate Treatment)\Drawings\25028-E17 (Control Schematics - III).dwg, Plotted Date: March 9, 2026 6:54 PM By: Tobias J. Wiley

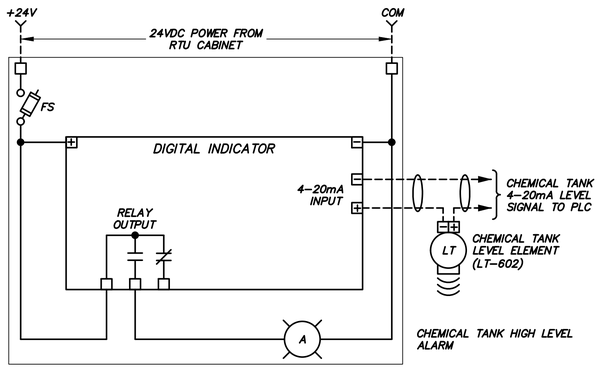

NaOCl STORAGE TANK LEVEL DISPLAY PANEL SCHEMATIC (LCP–602)

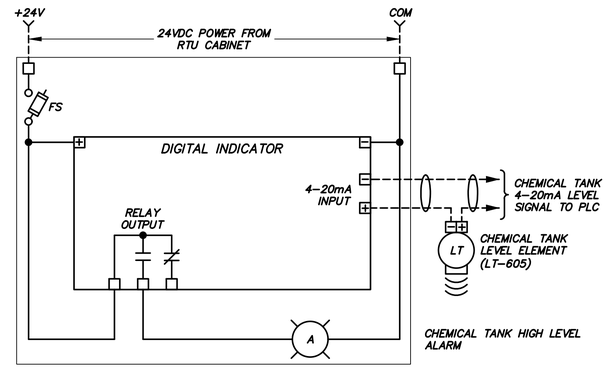

PHOSPHORIC ACID TANK LEVEL DISPLAY PANEL SCHEMATIC (LCP–605)

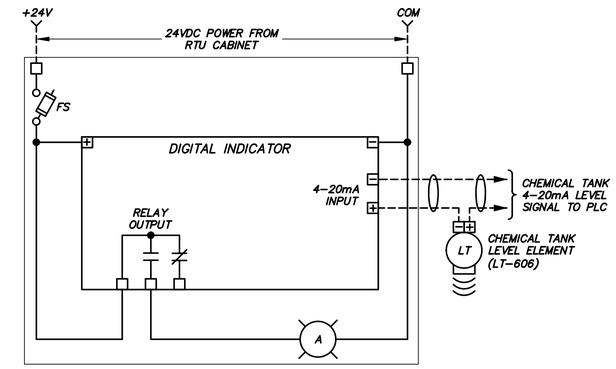

FERRIC CHLORIDE TANK LEVEL DISPLAY PANEL SCHEMATIC (LCP–606)

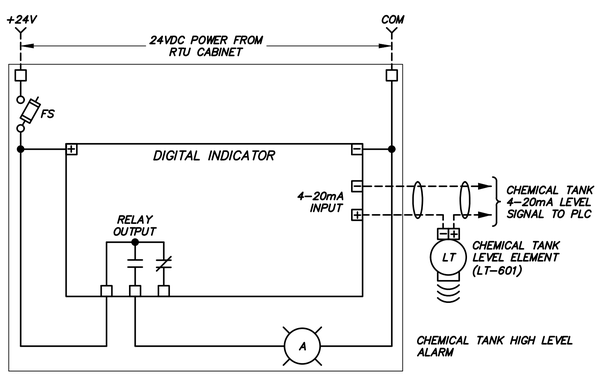

NaOH STORAGE TANK LEVEL DISPLAY PANEL SCHEMATIC (LCP–601)

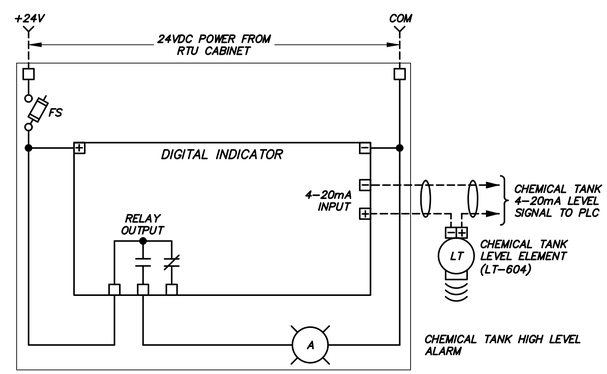

ACETIC ACID TANK LEVEL DISPLAY PANEL SCHEMATIC (LCP–604)

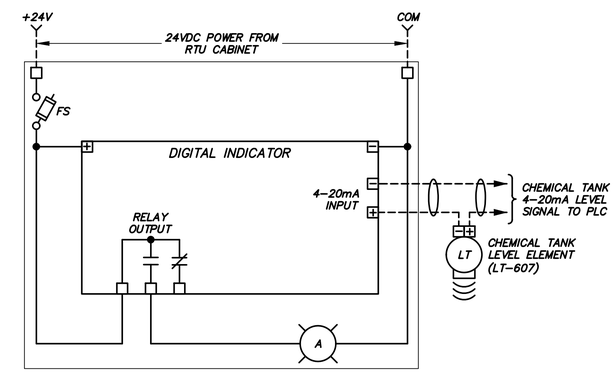

ACH TANK LEVEL DISPLAY PANEL SCHEMATIC (LCP–607)

REVISIONS:

NO	DATE	BY	DESCRIPTION
A	10/03/25	FT	30% SUBMITTAL
B	12/12/25	FT	60% SUBMITTAL
C	03/09/26	FT	90% SUBMITTAL

The Installation shown is to be Installed In accordance with the Arizona Water Company standard specifications on file with the Arizona Department of Environmental Quality

Revised drawings BY1 or Based upon field conditions, shall be marked "AS BUILT" and returned to Arizona Water Company.

W.A. No.:
P.E. No.:
SYSTEM:
LEGAL DESC.:
TAX DIST.:
SBB No.:
DATE: 3/9/2026
SCALE: N/A
DRAWN BY: MV
REVIEWED BY: VC
CHECKED BY: JLG

ARIZONA WATER COMPANY
3805 N. BLACK CANYON HWY., POST OFFICE BOX 29006
PHOENIX, ARIZONA 85038-9006
(602) 240-6860

PROJECT DESC: STANFIELD GWS&T USBR GRANT COORDINATION
PROJECT SHEET DESC: CONTROL SCHEMATICS - IV

Registered Professional Engineer (Civil) CERTIFICATE NO. 53839 JORGE GERARDO 3/9/26 Date Signed ARIZONA, U.S.A.

DWG. No.: E-018

SHEET 77 OF 98

DARCOR ELECTRICAL CONSULTING ENGINEERS
22601 N. 17TH AVE.
SUITE 140
PHOENIX, AZ 85027
Ph: (602) 795-2699
WWW.DARCORINC.COM

consor

Drawing Path and Name: Z:\2025\25028-Consor (AWC Stanfield Wells 1 &3 Arsenic and Nitrate Treatment)\Drawings\25028-E18 (Control Schematics - IV).dwg, Plotted Date: March 9, 2026 6:54 PM By: Tobias J. Wiley

KEY NOTES

1. BOND GEC TO EQUIPMENT RACK USING UL LISTED LUG.
2. 1-5/8" GALVANIZED STEEL STRUT AS REQUIRED TO PROPERLY SUPPORT EQUIPMENT.
3. 3" GALVANIZED SQUARE STEEL POST AS REQUIRED TO PROPERLY SUPPORT EQUIPMENT.

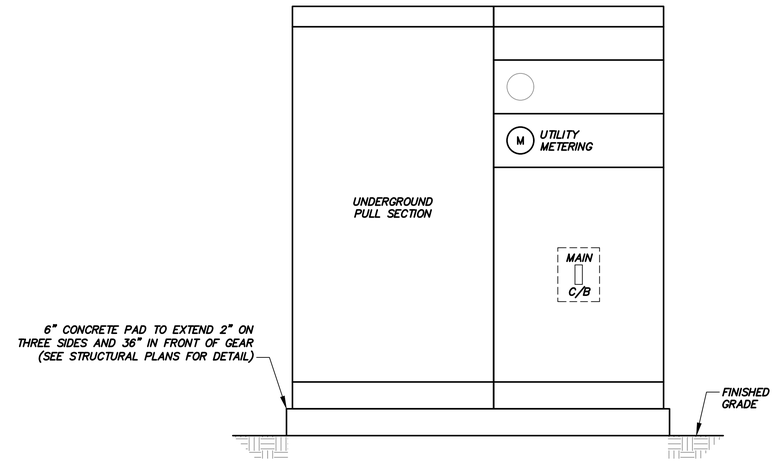

AA / E-003 SERVICE ENTRANCE SECTION ELEVATION
NTS

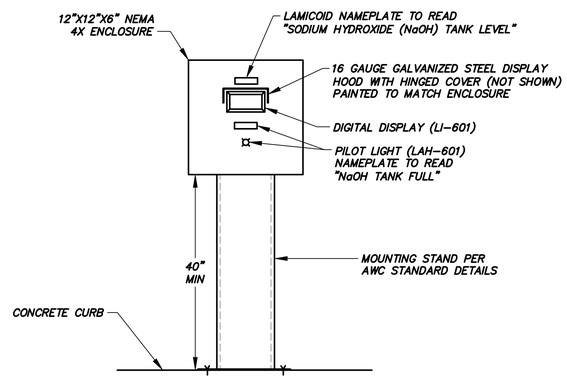

NOTES:

1. CONDUITS NOT SHOWN FOR CLARITY.
2. INSTALL TERMINAL BLOCKS AND DIN RAIL IN ENCLOSURE TO TERMINATE ALL FIELD WIRING.

A / TYP NaOH TANK LEVEL DISPLAY PANEL (LCP-601) MOUNTING DETAIL
NTS

REVISIONS:

NO	DATE	BY	DESCRIPTION
A	10/03/25	FT	30% SUBMITTAL
B	12/12/25	FT	60% SUBMITTAL
C	03/09/26	FT	90% SUBMITTAL

The Installation shown is to be Installed In accordance with the Arizona Water Company standard specifications on file with the Arizona Department of Environmental Quality

Revised Arizona BTS at least two full working days prior to any work commencing. Call 8(0)1 or dial (602)263-1100.

W.A. No.:
P.E. No.:
SYSTEM:
LEGAL DESC.:
TAX DIST.:
SBI No.:
DATE: 3/9/2026
SCALE: N/A
DRAWN BY: MV
REVIEWED BY: VC
CHECKED BY: JLG

ARIZONA WATER COMPANY
3805 N. BLACK CANYON HWY. POST OFFICE BOX 29006
PHOENIX, ARIZONA 85038-9006
(602) 240-6860

PROJECT DESC: STANFIELD GWS&T USBR GRANT COORDINATION
PROJECT SHEET DESC: ELECTRICAL ELEVATIONS

Registered Professional Engineer (Electrical) CERTIFICATE NO. 53839 JORGE GERARDO 3/9/26 Date Signed ARIZONA, U.S.A.

DWG. No.: E-019
SHEET 78 OF 98

DARCOR ELECTRICAL CONSULTING ENGINEERS
22601 N. 17TH AVE. SUITE 140 PHOENIX, AZ 85027 Ph: (602) 795-2699 WWW.DARCORINC.COM

consor

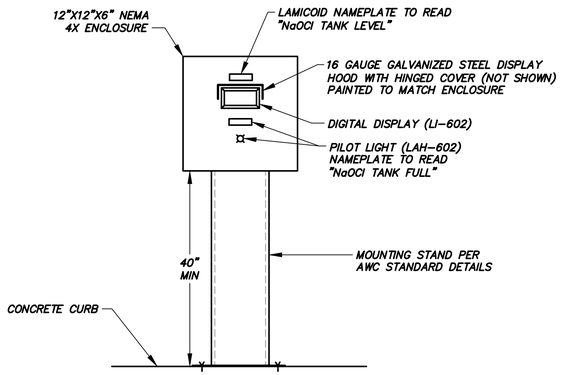

NOTES:

1. CONDUITS NOT SHOWN FOR CLARITY.
2. INSTALL TERMINAL BLOCKS AND DIN RAIL IN ENCLOSURE TO TERMINATE ALL FIELD WIRING.

B TYP — NaOCl TANK LEVEL DISPLAY PANEL (LCP-602) MOUNTING DETAIL

NTS

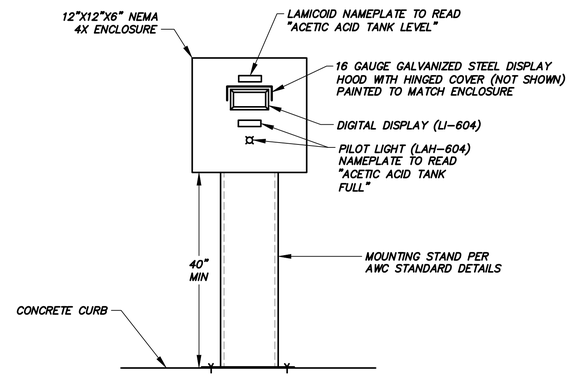

NOTES:

1. CONDUITS NOT SHOWN FOR CLARITY.
2. INSTALL TERMINAL BLOCKS AND DIN RAIL IN ENCLOSURE TO TERMINATE ALL FIELD WIRING.

C TYP — ACETIC ACID TANK LEVEL DISPLAY PANEL (LCP-604) MOUNTING DETAIL

NTS

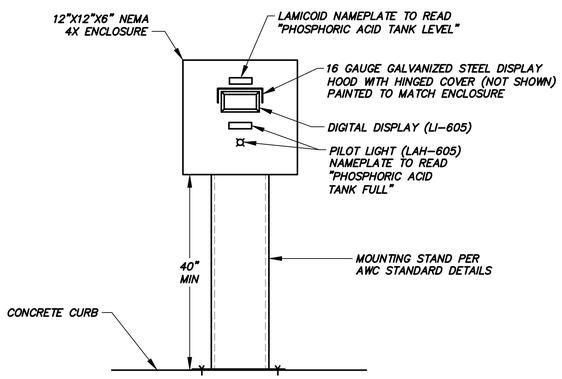

NOTES:

1. CONDUITS NOT SHOWN FOR CLARITY.
2. INSTALL TERMINAL BLOCKS AND DIN RAIL IN ENCLOSURE TO TERMINATE ALL FIELD WIRING.

D TYP — PHOSPHORIC ACID TANK LEVEL DISPLAY (LCP-605) PANEL MOUNTING DETAIL

NTS

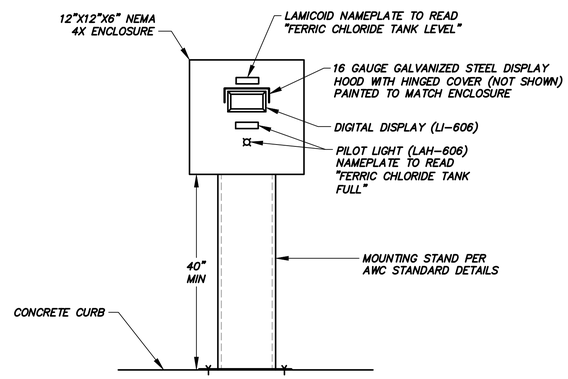

NOTES:

1. CONDUITS NOT SHOWN FOR CLARITY.
2. INSTALL TERMINAL BLOCKS AND DIN RAIL IN ENCLOSURE TO TERMINATE ALL FIELD WIRING.

E TYP — FERRIC CHLORIDE TANK LEVEL DISPLAY PANEL (LCP-606) MOUNTING DETAIL

NTS

REVISIONS:

NO	DATE	BY	DESCRIPTION
A	10/03/25	FT	30% SUBMITTAL
B	12/12/25	FT	60% SUBMITTAL
C	03/09/26	FT	90% SUBMITTAL

The Installation shown is to be Installed In accordance with the Arizona Water Company standard specifications on file with the Arizona Department of Environmental Quality

Revised Arizona BTS all Based Upon Table contained within Arizona Blue Stake, Inc. Rules and Regulations. Call BTS or other Arizona Blue Stakes

W.A. No.:
P.E. No.:
SYSTEM:
LEGAL DESC.:
TAX DIST.:
SBI No.:
DATE: 3/9/2026
SCALE: N/A
DRAWN BY: MV
REVIEWED BY: VC
CHECKED BY: JLG

ARIZONA WATER COMPANY
3805 N. BLACK CANYON HWY. POST OFFICE BOX 29006
PHOENIX, ARIZONA 85038-9006
(602) 240-6860

PROJECT DESC: STANFIELD GWS&T USBR GRANT COORDINATION

PROJECT SHEET DESC: ELECTRICAL DETAILS - I

Registered Professional Engineer (Electrical) CERTIFICATE NO. 53839 JORGE GERARDO 3/9/26 Date Signed ARIZONA, U.S.A.

DARCOR ELECTRICAL CONSULTING ENGINEERS
22601 N. 17TH AVE. SUITE 140 PHOENIX, AZ 85027
Ph: (602) 795-2699 WWW.DARCORINC.COM

consor

DWG. No.: E-020

SHEET 79 OF 98

Drawing Path and Name: Z:\2025\25028-Consor (AWC Stanfield Wells 1 &3 Arsenic and Nitrate Treatment)\Drawings\25028-E20 (Electrical Details - I).dwg, Plotted Date: March 9, 2026 6:54 PM By: Tobias J. Wiley

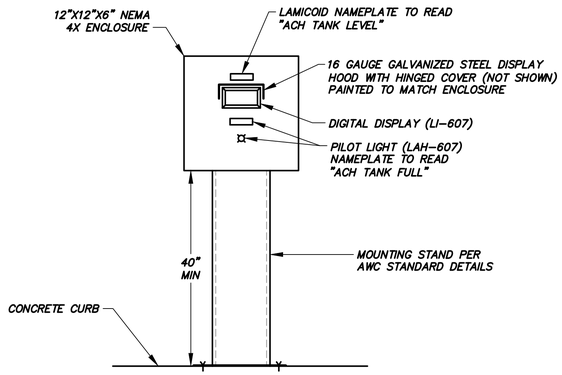

NOTES:

1. CONDUITS NOT SHOWN FOR CLARITY.
2. INSTALL TERMINAL BLOCKS AND DIN RAIL IN ENCLOSURE TO TERMINATE ALL FIELD WIRING.

F TYP — ACH TANK LEVEL DISPLAY PANEL (LCP-607) MOUNTING DETAIL

NTS

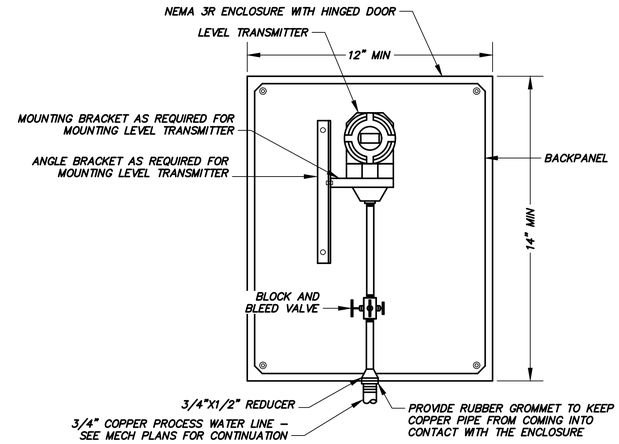

NOTES:

1. CONDUITS NOT SHOWN FOR CLARITY.
2. OUTER DOOR SHOWN REMOVED FOR CLARITY.
3. INSTALL ENCLOSURE ON MOUNTING STAND AT +24" AFG PER AWC STANDARD DETAIL.

G TYP — LEVEL TRANSMITTER ENCLOSURE DETAIL (LIT-401)

NTS

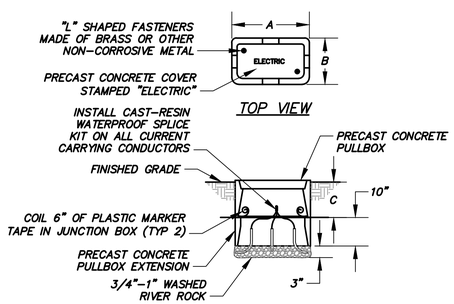

SIDE VIEW (SECTION)

TYPE	DIM. A	DIM. B	DIM. C
#3-1/2	20-1/4"	13-3/8"	12"
#7	37-5/8"	26"	18"

UB2 TYP — TYPICAL UNDERGROUND JUNCTION BOX DETAIL

NTS

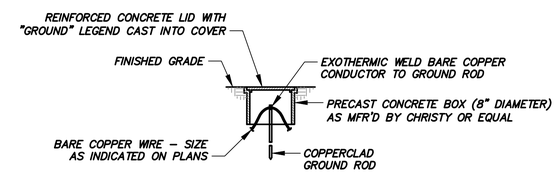

GRW TYP — TYPICAL GROUND ROD AND WELL DETAIL

NTS

REVISIONS:

NO	DATE	BY	DESCRIPTION
A	10/03/25	FT	30% SUBMITTAL
B	12/12/25	FT	60% SUBMITTAL
C	03/09/26	FT	90% SUBMITTAL

The Installation shown is to be Installed In accordance with the Arizona Water Company standard specifications on file with the Arizona Department of Environmental Quality

Revised drawings are based upon field conditions, actual sizes, and actual measurements.

Shall Govt. or other Inspector's Approval

W.A. No.:
P.E. No.:
SYSTEM:
LEGAL DESC.:
TAX DIST.:
SBI No.:
DATE: 3/9/2026
SCALE: N/A
DRAWN BY: MV
REVIEWED BY: VC
CHECKED BY: JLG

ARIZONA WATER COMPANY
3805 N. BLACK CANYON HWY. POST OFFICE BOX 29006
PHOENIX, ARIZONA 85038-9006
(602) 240-6860

PROJECT DESC: STANFIELD GWS&T USBR GRANT COORDINATION

PROJECT SHEET DESC: ELECTRICAL DETAILS - II

Registered Professional Engineer (Civil) CERTIFICATE NO. 53839 JORGE GERARDO 3/9/26 Date Signed ARIZONA, U.S.A.

DARCOR ELECTRICAL CONSULTING ENGINEERS
22601 N. 17TH AVE. SUITE 140 PHOENIX, AZ 85027 Ph: (602) 795-2699 WWW.DARCORINC.COM

consor

DWG. No.: E-021

Drawing Path and Name: Z:\2025\25028-Consor (AWC Stanfield Wells 1 &3 Arsenic and Nitrate Treatment)\Drawings\25028-E21 (Electrical Details - II).dwg, Plotted Date: March 9, 2026 6:54 PM By: Tobias J. Wiley

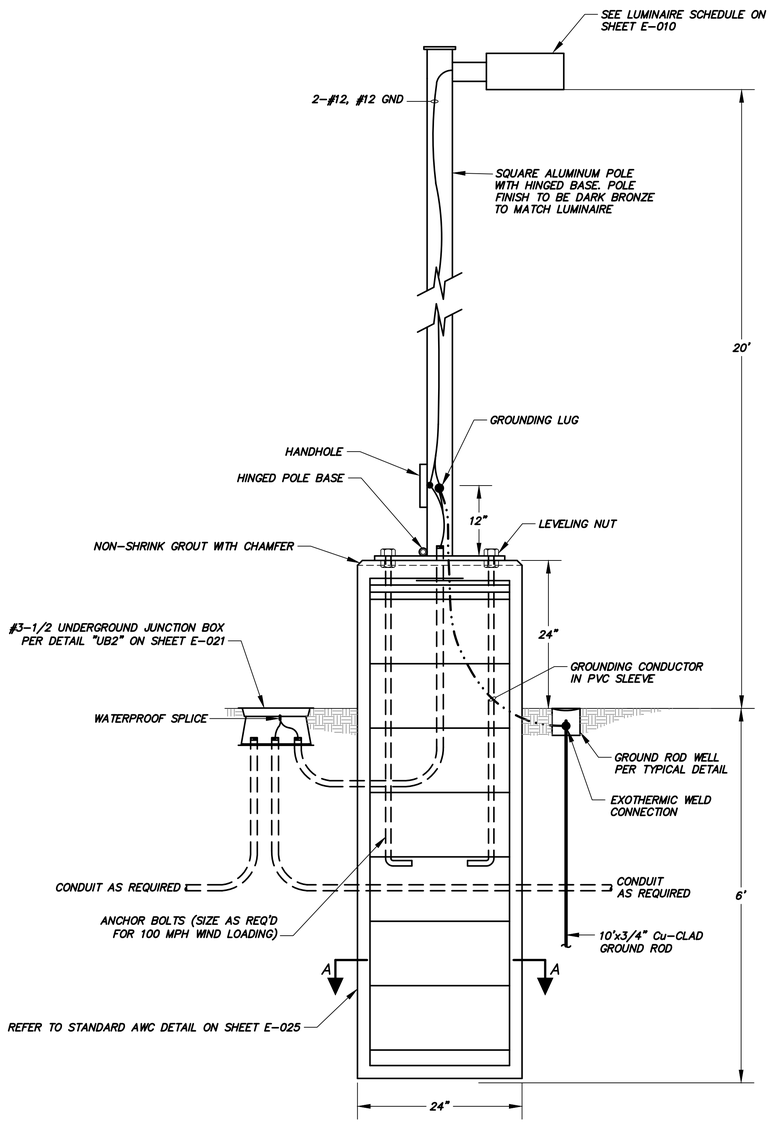

ELEVATION

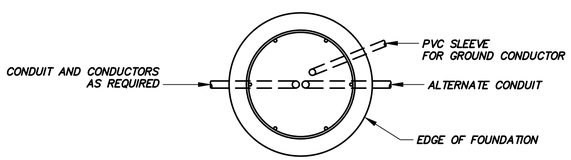

SECTION A-A

AL1 TYP TYPICAL AREA LIGHT DETAIL

NTS

NOTE:

1. PROVIDE SUBMITTALS FOR LUMINAIRES, LIGHT POLES AND ACCESSORIES, INCLUDING FOUNDATION DETAILS.

DARCOR ELECTRICAL CONSULTING ENGINEERS
22601 N. 17TH AVE.
SUITE 140
PHOENIX, AZ 85027
Ph: (602) 795-2699
WWW.DARCORINC.COM

consor

REVISIONS:

NO	DATE	BY	DESCRIPTION
A	10/03/25	FT	30% SUBMITTAL
B	12/12/25	FT	60% SUBMITTAL
C	03/09/26	FT	90% SUBMITTAL

The Installation shown is to be Installed In accordance with the Arizona Water Company standard specifications on file with the Arizona Department of Environmental Quality

Revised Arizona BPS 01 dated June 1991 covering Arizona Blue Stake, Inc. and Arizona Underground Protection Service, Inc. Shall BPS 01 as effect Arizona BPS 01 dated June 1991

W.A. No.:
P.E. No.:
SYSTEM:
LEGAL DESC.:
TAX DIST.:
SBB No.:
DATE: 3/9/2026
SCALE: N/A
DRAWN BY: MV
REVIEWED BY: VC
CHECKED BY: JLG

ARIZONA WATER COMPANY
3805 N. BLACK CANYON HWY. POST OFFICE BOX 29006
PHOENIX, ARIZONA 85038-9006
(602) 240-6860

PROJECT DESC: STANFIELD GWS&T USBR GRANT COORDINATION
PROJECT SHEET DESC: ELECTRICAL DETAILS - III

Registered Professional Engineer (Electrical) CERTIFICATE NO. 53839 JORGE GERARDO 3/9/26 Date Signed ARIZONA, U.S.A.

DWG. No.: E-022

Drawing Path and Name: Z:\2025\25028-Consor (AWC Stanfield Wells 1 &3 Arsenic and Nitrate Treatment)\Drawings\25028-E22 (Electrical Details - III).dwg, Plotted Date: March 9, 2026 6:55 PM By: Tobias J. Wiley

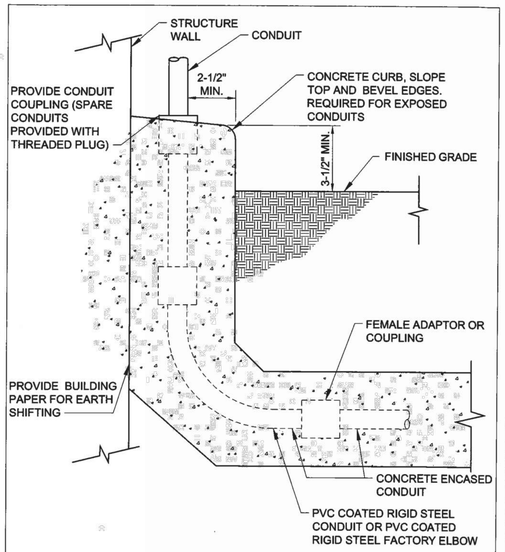

ARIZONA WATER COMPANY

STANDARD DETAILS FOR THE INSTALLATION OF
CONDUIT CURB AT FINISHED GRADE

DRAWN BY: | APPROVED BY: | DATE: 12-23-08

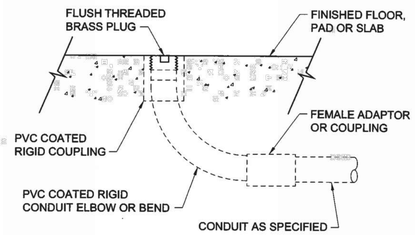

ARIZONA WATER COMPANY

STANDARD DETAILS FOR THE INSTALLATION OF
CONDUIT FLUSH TERMINATION IN SLAB

DRAWN BY: | APPROVED BY: | DATE: 12-23-08

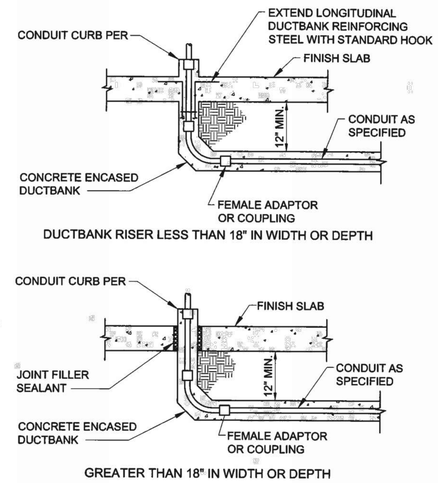

ARIZONA WATER COMPANY

STANDARD DETAILS FOR THE INSTALLATION OF
CONDUIT RISERS FROM DUCTBANK

DRAWN BY: | APPROVED BY: | DATE: 12-23-08

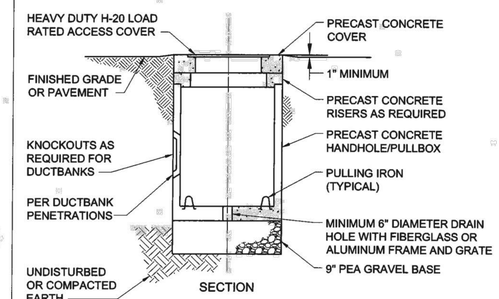

ARIZONA WATER COMPANY

STANDARD DETAILS FOR THE INSTALLATION OF
ELECTRICAL HANDHOLE/PULLBOX

DRAWN BY: | APPROVED BY: | DATE: 12-23-08

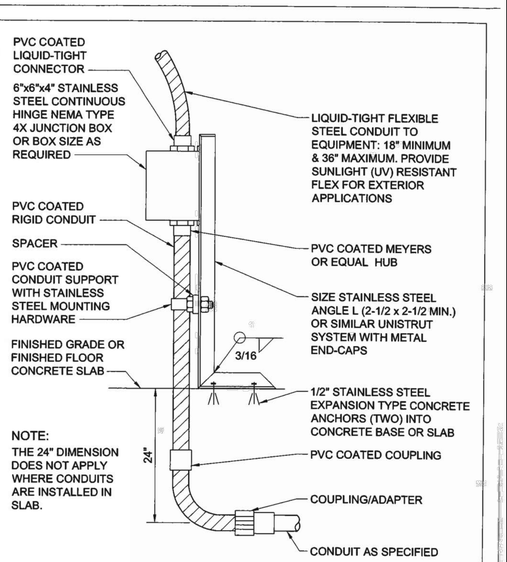

ARIZONA WATER COMPANY

STANDARD DETAILS FOR THE INSTALLATION OF
CONDUIT STUB-UP AND TRANSITION J-BOX SUPPORT

DRAWN BY: | APPROVED BY: | DATE: 12-23-08

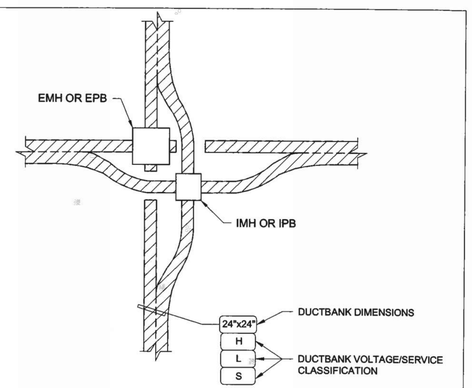

ABBREVIATIONS AND SYMBOLS:

H = HIGH VOLTAGE: 5KV, 15KV, 25KV OR 35KV

L = LOW VOLTAGE: 600V (POWER & CONTROL)

S = SIGNAL: INSTRUMENTATION, DATA COMMUNICATION, TELEPHONE

EMH = ELECTRICAL MANHOLE

EPB = ELECTRICAL PULLBOX

IMH = INSTRUMENT MANHOLE

IPB = INSTRUMENT PULLBOX

ARIZONA WATER COMPANY

STANDARD DETAILS FOR THE INSTALLATION OF
DUCTBANK WITH EMH/IMH LAYOUT

DRAWN BY: | APPROVED BY: | DATE: 12-23-08

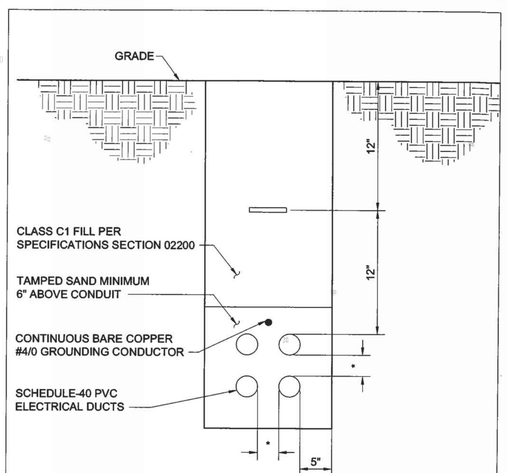

ARIZONA WATER COMPANY

STANDARD DETAILS FOR THE INSTALLATION OF
RACEWAYS
DIRECT BURIED RACEWAYS

DRAWN BY: | APPROVED BY: | DATE: 12-23-08

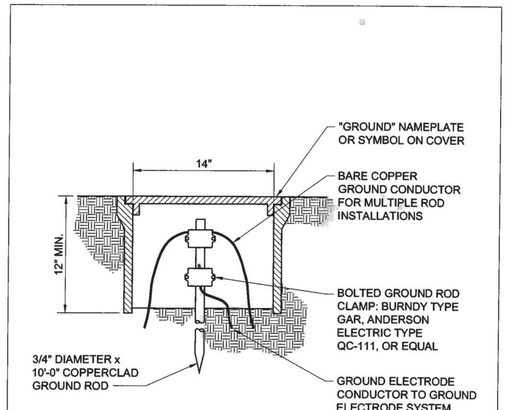

ARIZONA WATER COMPANY

STANDARD DETAILS FOR THE INSTALLATION OF
GROUND ROD TEST WELL

DRAWN BY: | APPROVED BY: | DATE: 12-29-08

REVISIONS:

NO	DATE	BY	DESCRIPTION
A	10/03/25	FT	30% SUBMITTAL
B	12/12/25	FT	60% SUBMITTAL
C	03/09/26	FT	90% SUBMITTAL

The Installation shown is to be Installed In accordance with the Arizona Water Company standard specifications on file with the Arizona Department of Environmental Quality

Revised Arizona BTS at least one full working day before you dig, it's the law. Call 8(811) or dial Arizona811.com

P.E. No.:

W.A. No.:

SYSTEM:

LEGAL DESC.:

TAX DIST.:

DATE: 3/9/2026

DRAWN BY: MV

REVIEWED BY: VC

SB No.:

SCALE: N/A

CHECKED BY: JLG

ARIZONA WATER COMPANY
3805 N. BLACK CANYON HWY. POST OFFICE BOX 29006
PHOENIX, ARIZONA 85038-9006
(602) 240-6860

PROJECT DESC.: STANFIELD GWS&T USBR GRANT COORDINATION

PROJECT SHEET DESC.: ELECTRICAL DETAILS - IV

Registered Professional Engineer (Civil) CERTIFICATE NO. 53839 JORGE GERARDO 3/9/26 Date Signed ARIZONA U.S.A.

DWG. No.: E-023

SHEET 82 OF 98

DARCOR ELECTRICAL CONSULTING ENGINEERS
22801 N. 17TH AVE. SUITE 140 PHOENIX, AZ 85027
Ph: (602) 795-2699
WWW.DARCORINC.COM

consor

Drawing Path and Name: Z:\2025\25028-Consor (AWC Stanfield Wells 1 &3 Arsenic and Nitrate Treatment)\Drawings\25028-E23 (Electrical Details - IV).dwg, Plotted Date: March 9, 2026 6:55 PM By: Tobias J. Wiley

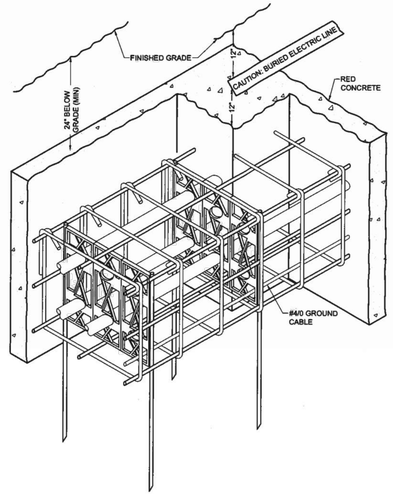

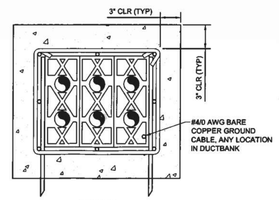

SECTION

ARIZONA WATER COMPANY
3805 N. BLACK CANON HWY. POST OFFICE BOX 29006
PHOENIX, ARIZONA 85038-9006
(602) 240-6860

REINFORCED CONCRETE ENCASED DUCTBANK

W.A. | PE
SYSTEM
SEC. -T- R.
TAX DIST.
DATE: | SCALE:
DRAWN BY: | SHEET OF
THE ABOVE INSTALLATION IS TO BE INSTALLED IN ACCORDANCE WITH THE ARIZONA WATER COMPANY STANDARD SPECIFICATIONS ON FILE WITH ARIZONA DEPARTMENT OF ENVIRONMENTAL QUALITY
DWG. No.

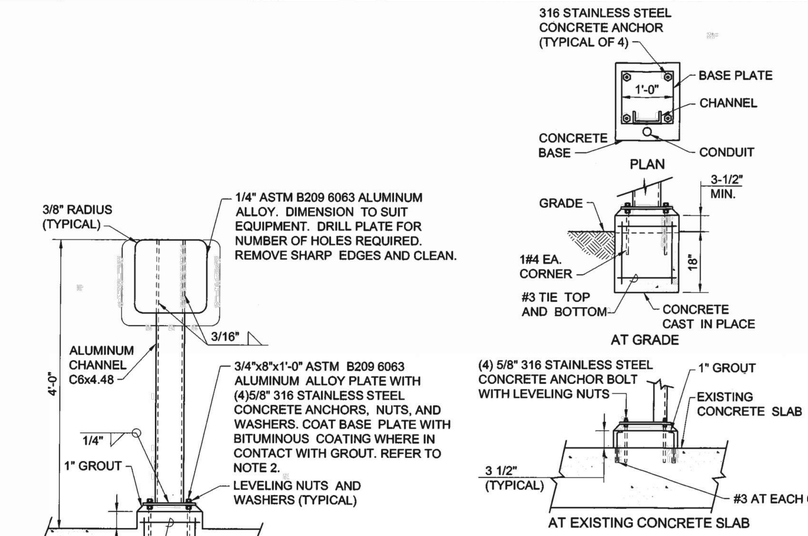

ARIZONA WATER COMPANY
3805 N. BLACK CANON HWY. POST OFFICE BOX 29006
PHOENIX, ARIZONA 85038-9006
(602) 240-6860

INSTRUMENT/CONTROL STATION MOUNTING STAND

W.A. | PE
SYSTEM
SEC. -T- R.
TAX DIST.
DATE: | SCALE:
DRAWN BY: | SHEET OF
THE ABOVE INSTALLATION IS TO BE INSTALLED IN ACCORDANCE WITH THE ARIZONA WATER COMPANY STANDARD SPECIFICATIONS ON FILE WITH ARIZONA DEPARTMENT OF ENVIRONMENTAL QUALITY
DWG. No.

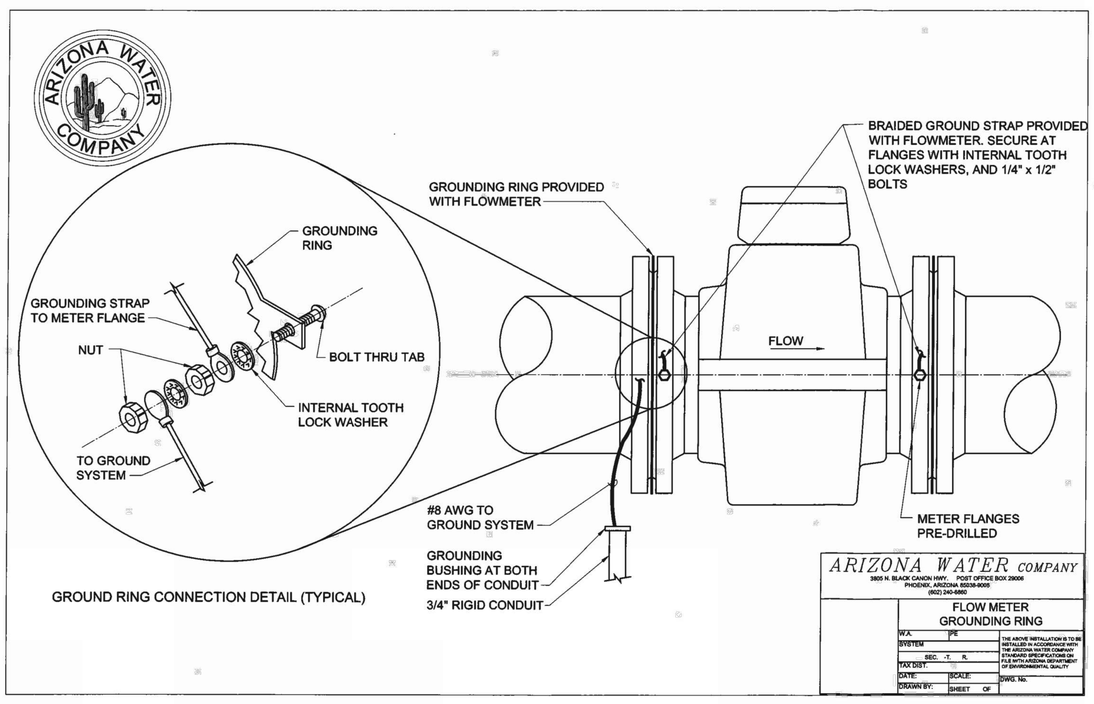

GROUND RING CONNECTION DETAIL (TYPICAL)

ARIZONA WATER COMPANY
3805 N. BLACK CANON HWY. POST OFFICE BOX 29006
PHOENIX, ARIZONA 85038-9006
(602) 240-6860

FLOW METER GROUNDING RING

W.A. | PE
SYSTEM
SEC. -T- R.
TAX DIST.
DATE: | SCALE:
DRAWN BY: | SHEET OF
THE ABOVE INSTALLATION IS TO BE INSTALLED IN ACCORDANCE WITH THE ARIZONA WATER COMPANY STANDARD SPECIFICATIONS ON FILE WITH ARIZONA DEPARTMENT OF ENVIRONMENTAL QUALITY
DWG. No.

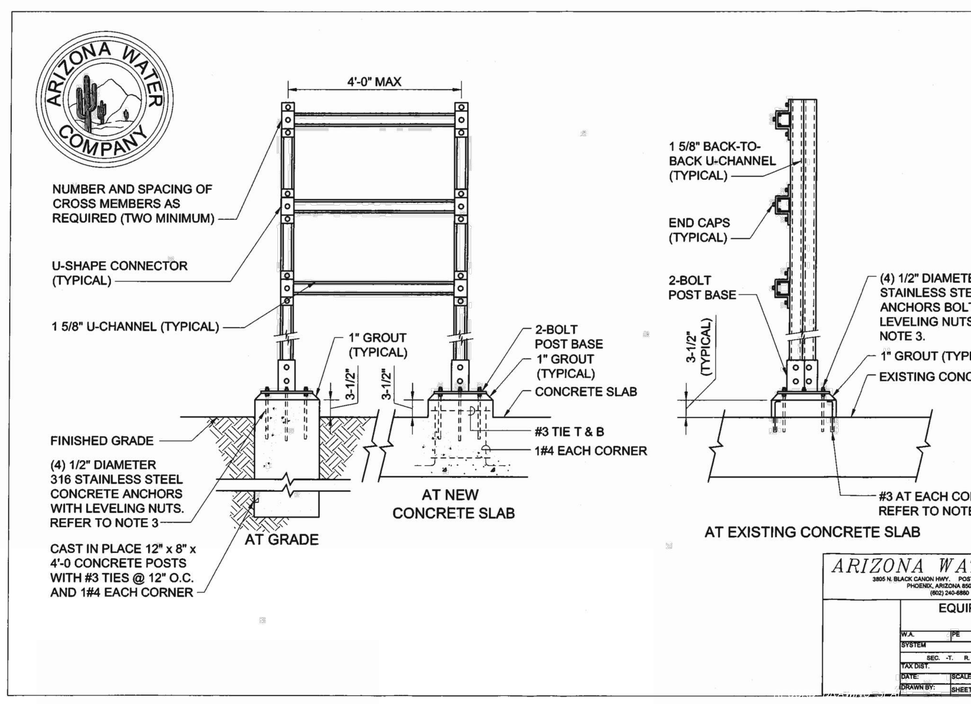

ARIZONA WATER COMPANY
3805 N. BLACK CANON HWY. POST OFFICE BOX 29006
PHOENIX, ARIZONA 85038-9006
(602) 240-6860

EQUIPMENT RACK

W.A. | PE
SYSTEM
SEC. -T- R.
TAX DIST.
DATE: | SCALE:
DRAWN BY: | SHEET OF
THE ABOVE INSTALLATION IS TO BE INSTALLED IN ACCORDANCE WITH THE ARIZONA WATER COMPANY STANDARD SPECIFICATIONS ON FILE WITH ARIZONA DEPARTMENT OF ENVIRONMENTAL QUALITY
DWG. No.

REVISIONS:

NO	DATE	BY	DESCRIPTION
A	10/03/25	FT	30% SUBMITTAL
B	12/12/25	FT	60% SUBMITTAL
C	03/09/26	FT	90% SUBMITTAL

The Installation shown is to be Installed In accordance with the Arizona Water Company standard specifications on file with the Arizona Department of Environmental Quality

Revised Arizona BTS at least one hour prior to excavation, exclusive of weekends and holidays. Call 8(0)1 or effect (Arizona)811 (Arizona)

W.A. No.:
SYSTEM:
LEGAL DESC.:
TAX DIST.:
DATE: 3/9/2026
DRAWN BY: MV
REVIEWED BY: VC
CHECKED BY: JLG
SCALE: N/A
SBI No.:
P.E. No.:

ARIZONA WATER COMPANY
3805 N. BLACK CANYON HWY. POST OFFICE BOX 29006
PHOENIX, ARIZONA 85038-9006
(602) 240-6860

PROJECT DESC: STANFIELD GWS&T USBR GRANT COORDINATION
PROJECT SHEET DESC: ELECTRICAL DETAILS - V

Registered Professional Engineer (Electrical) CERTIFICATE NO. 53839 JORGE GERARDO 3/9/26 Date Signed ARIZONA, U.S.A.

DWG. No.: E-024

DARCOR ELECTRICAL CONSULTING ENGINEERS
22601 N. 17TH AVE. SUITE 140 PHOENIX, AZ 85027 Ph: (602) 795-2699 WWW.DARCORINC.COM

consor

Drawing Path and Name: Z:\2025\25028-Consor (AWC Stanfield Wells 1 &3 Arsenic and Nitrate Treatment)\Drawings\25028-E24 (Electrical Details - V).dwg, Plotted Date: March 9, 2026 6:55 PM By: Tobias J. Wiley

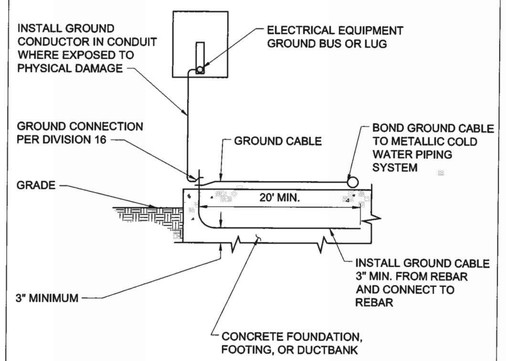

ARIZONA WATER COMPANY

STANDARD DETAILS FOR THE INSTALLATION OF

GROUNDING CONCRETE ENCASED GROUND ELECTRODE CONDUCTOR

DRAWN BY: | APPROVED BY: | DATE: 12-29-08

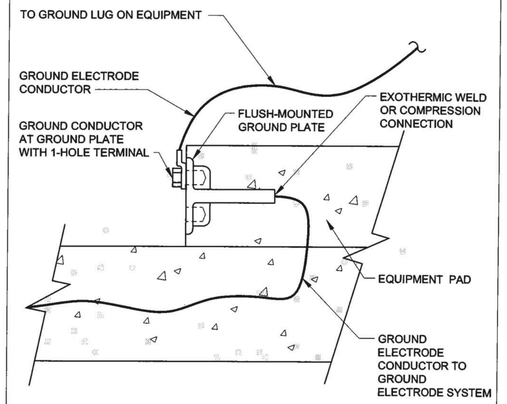

ARIZONA WATER COMPANY

STANDARD DETAILS FOR THE INSTALLATION OF

EQUIPMENT GROUND PLATE

DRAWN BY: | APPROVED BY: | DATE: 12-29-08

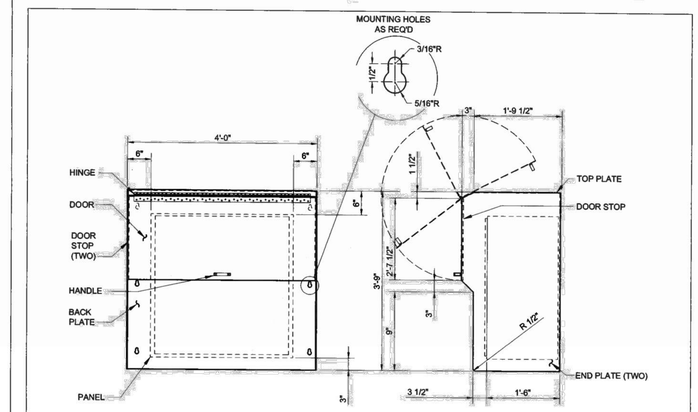

ARIZONA WATER COMPANY

STANDARD DETAILS FOR THE INSTALLATION OF

INSTRUMENT SUN/RAIN HOOD

DRAWN BY: | APPROVED BY: | DATE: 12-29-08

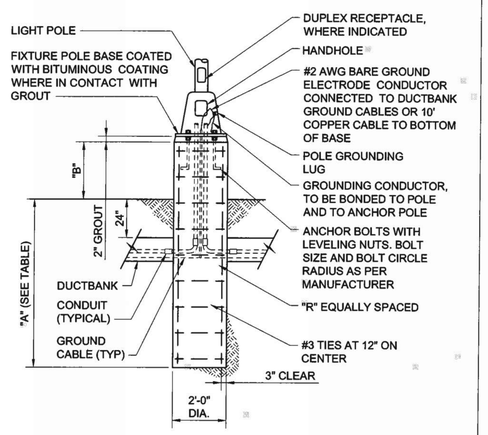

POLE HEIGHT	"A" MINIMUM	MAX BASE HEIGHT "B"	"R" LONGITUDINAL REINF.
10'-0"	4'-6"	3'-0"	(4) #4
20'-0"	5'-8"	3'-0"	(4) #5
30'-0"	7'-0"	3'-0"	(6) #5
40'-0"	7'-10"	3'-0"	(6) #6

ARIZONA WATER COMPANY

STANDARD DETAILS FOR THE INSTALLATION OF

POLE BASE (EXTENDED)

DRAWN BY: | APPROVED BY: | DATE: 12-29-08

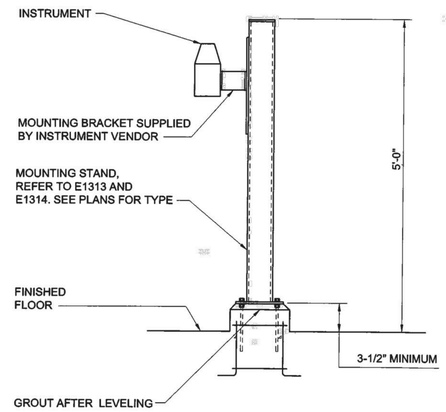

ARIZONA WATER COMPANY

STANDARD DETAILS FOR THE INSTALLATION OF

INSTRUMENT FLOOR MOUNT

DRAWN BY: | APPROVED BY: | DATE: 12-23-08

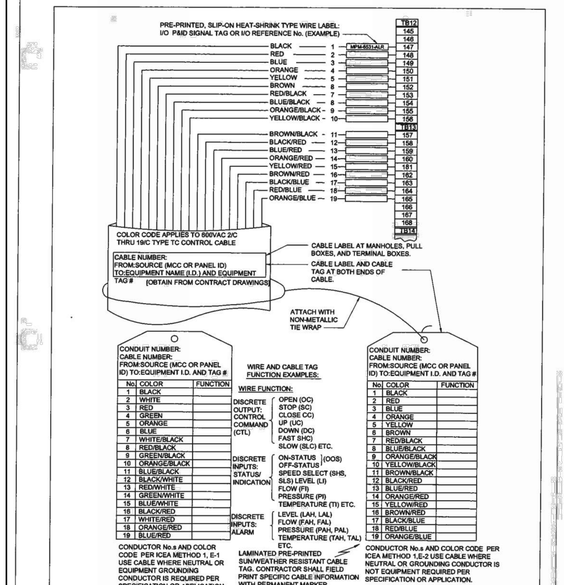

ARIZONA WATER COMPANY

STANDARD DETAILS FOR THE INSTALLATION OF

CABLE TAGGING AND LABELING (EXAMPLE)

DRAWN BY: | APPROVED BY: | DATE: 12-23-08

REVISIONS:

NO	DATE	BY	DESCRIPTION
A	10/03/25	FT	30% SUBMITTAL
B	12/12/25	FT	60% SUBMITTAL
C	03/09/26	FT	90% SUBMITTAL

The Installation shown is to be Installed In accordance with the Arizona Water Company standard specifications on file with the Arizona Department of Environmental Quality

Bluestakes.com 811 or Blue Stake, Inc. 1-800-782-5348 (Outside Maricopa County) Call 811 or visit Bluestakes.com

W.A. No.:
SYSTEM:
LEGAL DESC.:
TAX DIST.:
DATE: 3/9/2026
DRAWN BY: MV
P.E. No.:
SB No.:
SCALE: N/A
REVIEWED BY: VC
CHECKED BY: JLG

ARIZONA WATER COMPANY
3805 N. BLACK CANYON HWY. POST OFFICE BOX 29006
PHOENIX, ARIZONA 85038-9006
(602) 240-6860

PROJECT DESC.: STANFIELD GWS&T USBR GRANT COORDINATION

PROJECT SHEET DESC.: ELECTRICAL DETAILS - VI

Registered Professional Engineer (Electrical) CERTIFICATE NO. 53839 JORGE GERARDO 3/9/26 Date Signed ARIZONA, U.S.A.

DWG. No.: E-025

SHEET 84 OF 98

DARCOR ELECTRICAL CONSULTING ENGINEERS
22601 N. 17TH AVE. SUITE 140 PHOENIX, AZ 85027 Ph: (602) 795-2599 WWW.DARCORINC.COM

consor

Drawing Path and Name: Z:\2025\25028-Consor (AWC Stanfield Wells 1 &3 Arsenic and Nitrate Treatment)\Drawings\25028-E25 (Electrical Details - VI).dwg, Plotted Date: March 9, 2026 6:56 PM By: Tobias J. Wiley

TAG NAME IDENTIFICATION TABLE

	FIRST LETTER	SUCCEEDING LETTER(S)	
	MEASURED VARIABLE	OUTPUT FUNCTION	MODIFIER
A	ANALYSIS	ALARM	
B	BURNER , COMBUSTION		BYPASS
C	CONDUCTIVITY	CONTROL	CLOSED
D	DENSITY	DIFFERENTIAL	
E	VOLTAGE	PRIMARY ELEMENT	
F	FLOW RATE	FAILURE	FAST
G	GAUGE	GLASS, VIEWING DEVICE	
H	HAND (MANUAL)		HIGH
I	CURRENT (ELECTRICAL)	INDICATE	
J	POWER		
K	TIME, RATE OF CHANGE		
L	LEVEL		LOW
M	MOTION		MIDDLE
N	INTRUSION		NORMAL
O	TORQUE		OPEN
P	PRESSURE, VACUUM		
Q	QUANTITY	INTEGRATE, TOTALIZE	
R	RADIATION	RECORD OR PRINT	
S	SPEED, FREQUENCY	SWITCH	SLOW
T	TEMPERATURE	TRANSMIT	
U	MULTIVARIABLE	MULTIFUNCTION	MULTIFUNCTION
V	VIBRATION	VALVE, LOUVER	
W	WEIGHT, FORCE	WELL	
X	UNCLASSIFIED	UNCLASSIFIED	UNCLASSIFIED
Y	EVENT, STATE, PRESENCE	RELAY, COMPUTE, CONVERT	
Z	POSITION	DRIVER, ACTUATOR,	

INSTRUMENT LINES

- EXISTING PRIMARY PROCESS FLOW
- EXISTING SECONDARY PROCESS FLOW
- PRIMARY PROCESS FLOW
- SECONDARY PROCESS FLOW
- PROCESS AIR
- ELECTRICAL SIGNAL
- SOFTWARE LINK
- PNEUMATIC AIR
- SIGNAL CONTINUATION

INSTRUMENT SYMBOLS

HOA
HS 101
- DEVICE FUNCTION (SEE ABBREVIATIONS)
- DEVICE IDENTIFICATION (SEE IDENTIFICATION TABLE)
- DEVICE TAG NUMBER (LOOP NUMBER REFERENCE)

- FIELD MOUNTED DEVICE – ASTERISK INDICATES DEVICE FURNISHED BY EQUIPMENT VENDOR
- FRONT PANEL MOUNTED DEVICE
- BACK PANEL MOUNTED DEVICE
- INDICATOR LIGHT
- GRAPHIC DISPLAY FUNCTION ON MAN-MACHINE INTERFACE – NUMBER DENOTES ALARM LEVEL
- HUMAN MACHINE INTERFACE (HMI)
- GENERALIZED, UNDEFINED COMPLEX INTERLOCK LOGIC

ANALOG I/O | DIGITAL I/O | PULSE INPUT

PLC INPUTS/OUTPUTS

- CONTINUATION ARROW # REFERENCES SHEET OF CONTINUANCE

ABBREVIATIONS

AI	ANALOG INPUT	L/R	LOCAL/REMOTE	PI	PROCESS INFLUENT
AO	ANALOG OUTPUT	LAN	LOCAL AREA NETWORK	PLC	PROGRAMMABLE LOGIC CONTROLLER
BKP	BACKUP MODE	LCP	LOCAL CONTROL PANEL	POLY	POLYMER
B/W	BACKWASH	LLA	LOW LEVEL ALARM	PS	PRIMARY SLUDGE
CEN	CENTRIFUGE	LOR	LOCAL OFF REMOTE	PW	POTABLE WATER
CLL	CHLORINE LIQUID	LPA	LOW PRESSURE ALARM	RAS	RETURN ACTIVATED SLUDGE
CLS	CHLORINE SOLUTION	LVL	LEVEL	RF	RADIO FREQUENCY
CV	CONTROL VALVE	M	MOTOR	RIO	REMOTE INPUT/OUTPUT
D	DECANT WATER	M/A	MANUAL/AUTO	RS	RAW SEWAGE
DCS	DISTRIBUTED CONTROL SYSTEM	MCC	MOTOR CONTROL CENTER	RST	RESET
DI	DIGITAL INPUT	ML	MIXED LIQUOR	SBR	SEQUENCING BATCH REACTOR
DO	DIGITAL OUTPUT	MLR	MIXED LIQUOR RECYCLE	SC	SCUM
DR	DRAIN	MMI	MAN MACHINE INTERFACE	SD	SANITARY DRAIN
DS	DIGESTED SLUDGE	MH	MANHOLE	SE	SECONDARY EFFLUENT
EFF	EFFULENT	MTD	MOUNTED	SLC	SINGLE LOOP CONTROLLER
ETM	ELAPSED TIME METER	NaOCL	SODIUM HYPOCHLORITE	SP	SETPOINT
(E)	EXISTING OR RELOCATED	NO3	NITRATE	SPD	SURGE PROTECTIVE DEVICE
FA	FOUL AIR	NPW	NON POTABLE WATER	SPC	SET POINT CONTROL
FC	FAIL CLOSED	NS	NITROGEN SUPPLY	S/S	START/STOP (MOMENTARY)
FE	FINAL EFFLUENT	NaHSO3	SODIUM BISULFITE	SSS	SOLID-STATE SOFT STARTER
FeCL2	FERROUS CHLORIDE	NG	NATURAL GAS	SW	SEAL WATER
F/S	FAST/SLOW	NTU	TURBIDITY	TE	TREATED EFFLUENT
FM	FLOWMETER	OF	OVER FLOW	TPS	THICKENED PRIMARY SLUDGE
FOR	FORWARD-OFF-REVERSE	OIS	OPERATOR INTERFACE STATION	TWAS	THICKENED WASTE ACTIVATED SLUDGE
GT	GRIT	OIT	OPERATOR INTERFACE TERMINAL	UPS	UNINTERUPTIBLE POWER SUPPLY
HLA	HIGH LEVEL ALARM	OL	OVERLOAD	UW	UTILITY/PROCESS WATER
HMI	HUMAN MACHINE INTERFACE	OR	OVERRIDE	V	VALVE
HOA	HAND-OFF-AUTO	OT	OVERTORQUE	VFD	VARIABLE FREQUENCY DRIVE
HOR	HAND-OFF-REMOTE	O/C	OPEN/CLOSE	WAS	WASTE ACTIVATED SLUDGE
HPA	HIGH PRESSURE ALARM	O/O	ON/OFF (MAINTAINED)	WW	WASTEWATER
HS	HYDRAULIC SUPPLY	P	PUMP	1/2/B	PUMP 1/PUMP 2/BOTH
HTA	HIGH TEMPERATURE ALARM	P/B	PLC/BACKUP (MAINTAINED)	XMTR	TRANSMITTER
INF	INFLUENT	PCP	PROCESS CONTROL PANEL		
I/O	INPUT/OUTPUT	PE	PRIMARY EFFLUENT		
IAS	INSTRUMENT AIR SUPPLY	PFS	PRIMARY FINE SCREEN		

PROCESS FLOW AND MECHANICAL EQUIPMENT SYMBOLS

- AIR COMPRESSOR
- CENTRIFUGAL BLOWER
- CENTRIFUGAL PUMP
- FLOATING MIXER OR AERATOR
- AIR LIFT PUMP
- CHEMICAL METERING PUMP
- PROGRESSIVE CAVITY PUMP
- MIXER
- STATIC MIXER
- ROTARY LOBE BLOWER OR PUMP
- SUBMERSIBLE PUMP
- VERTICAL TURBINE PUMP
- SCREW (LIFT) PUMP
- HORN
- PARSHALL FLUME
- WIER
- MOTOR OPERATOR
- DESSICANT BOX
- SOLENOID OPERATOR
- HAND OPERATOR
- INJECTOR
- AIR RELIEF VALVE
- AIR RELIEF/VACUUM BREAK VALVE
- RADIO COMMUNICATION PATH

- FLANGE
- BLOCK AND BLEED 3-WAY VALVE
- BALL VALVE (NORMALLY OPENED)
- BALL VALVE (NORMALLY CLOSED)
- BUTTERFLY VALVE (NORMALLY OPENED)
- BUTTERFLY VALVE (NORMALLY CLOSED)
- CONTROL VALVE (NORMALLY OPEN)
- CONTROL VALVE (NORMALLY CLOSED)
- GATE VALVE (NORMALLY OPEN)
- 3 WAY VALVE
- GATE VALVE (NORMALLY CLOSED)
- PLUG VALVE (NORMALLY OPENED)
- PLUG VALVE (NORMALLY CLOSED)
- CHECK VALVE
- DIAPHRAGM VALVE (NORMALLY OPEN)
- DIAPHRAGM VALVE (NORMALLY CLOSED)
- SLUICE GATE (NORMALLY OPEN)
- SLUICE GATE (NORMALLY CLOSED)
- ULTRASONIC LEVEL SENSOR
- LEVEL PROBE(S)
- TEMPERATURE PROBE
- DOPPLER TYPE ULTRASONIC (PRIMARY FLOW ELEMENT)
- THERMAL FLOWMETER
- THERMAL FLOW SWITCH
- MAGNETIC FLOWMETER
- TELESCOPING VALVE
- SURGE ANTICIPATOR/PRESSURE RELIEF VALVE (NORMALLY OPEN)
- SURGE ANTICIPATOR/PRESSURE RELIEF VALVE (NORMALLY CLOSED)
- YAGI ANTENNA (PLAN VIEW)

- RADAR AREA/VELOCITY FLOWMETER
- ORIFICE PLATE (PRIMARY FLOW ELEMENT)
- PITOT TUBE (PRIMARY FLOW ELEMENT)
- PROPELLER FLOWMETER
- ROTAMETER (PRIMARY FLOW ELEMENT) OR
- THERMAL DISPERSION ELEMENT (PRIMARY FLOW ELEMENT)
- TRANSIT-TIME ULTRASONIC FLOWMETER (PRIMARY FLOW ELEMENT)
- VENTURI TUBE (PRIMARY FLOW ELEMENT)
- KNIFE GATE (NORMALLY OPEN)
- SLIDE PLATE
- FLOATING DECANTER
- DIAPHRAGM SEAL
- REDUCER
- INSERTION TYPE MAGNETIC (PRIMARY FLOW ELEMENT)
- SUBMERSIBLE MIXER
- FLOAT SWITCH
- COMMUNICATION MODULE
- WASHER SPRAY NOZZEL
- GEAR PUMP
- DRAIN
- WEIR GATE
- OMNI ANTENNA

DARCOR ELECTRICAL CONSULTING ENGINEERS
22601 N. 17TH AVE. SUITE 140 PHOENIX, AZ 85027
Ph: (602) 795-2699 WWW.DARCORINC.COM

consor

REVISIONS:

NO	DATE	BY	DESCRIPTION
A	10/03/25	FT	30% SUBMITTAL
B	12/12/25	FT	60% SUBMITTAL
C	03/09/26	FT	90% SUBMITTAL

The Installation shown is to be Installed In accordance with the Arizona Water Company standard specifications on file with the Arizona Department of Environmental Quality

Approved drawings are valid for 1 year from date stamp, unless otherwise specified by the Director

ARIZONA WATER COMPANY
3805 N. BLACK CANYON HWY. POST OFFICE BOX 29006
PHOENIX, ARIZONA 85038-9006
(602) 240-6860

W.A. No.:
SYSTEM:
LEGAL DESC.:
TAX DIST.:
DATE: 3/9/2026
DRAWN BY: MV
REVIEWED BY: VC
CHECKED BY: JLG
SCALE: N/A
SBB No.:
P.E. No.:
PROJECT DESC.: STANFIELD GWS&T USBR GRANT COORDINATION
PROJECT SHEET DESC.: P&ID - LEGEND

Registered Professional Engineer (Electrical) CERTIFICATE NO. 53839 JORGE GERARDO 3/9/26 Date Signed ARIZONA U.S.A.

DWG. No.: I-001

SHEET 85 OF 98

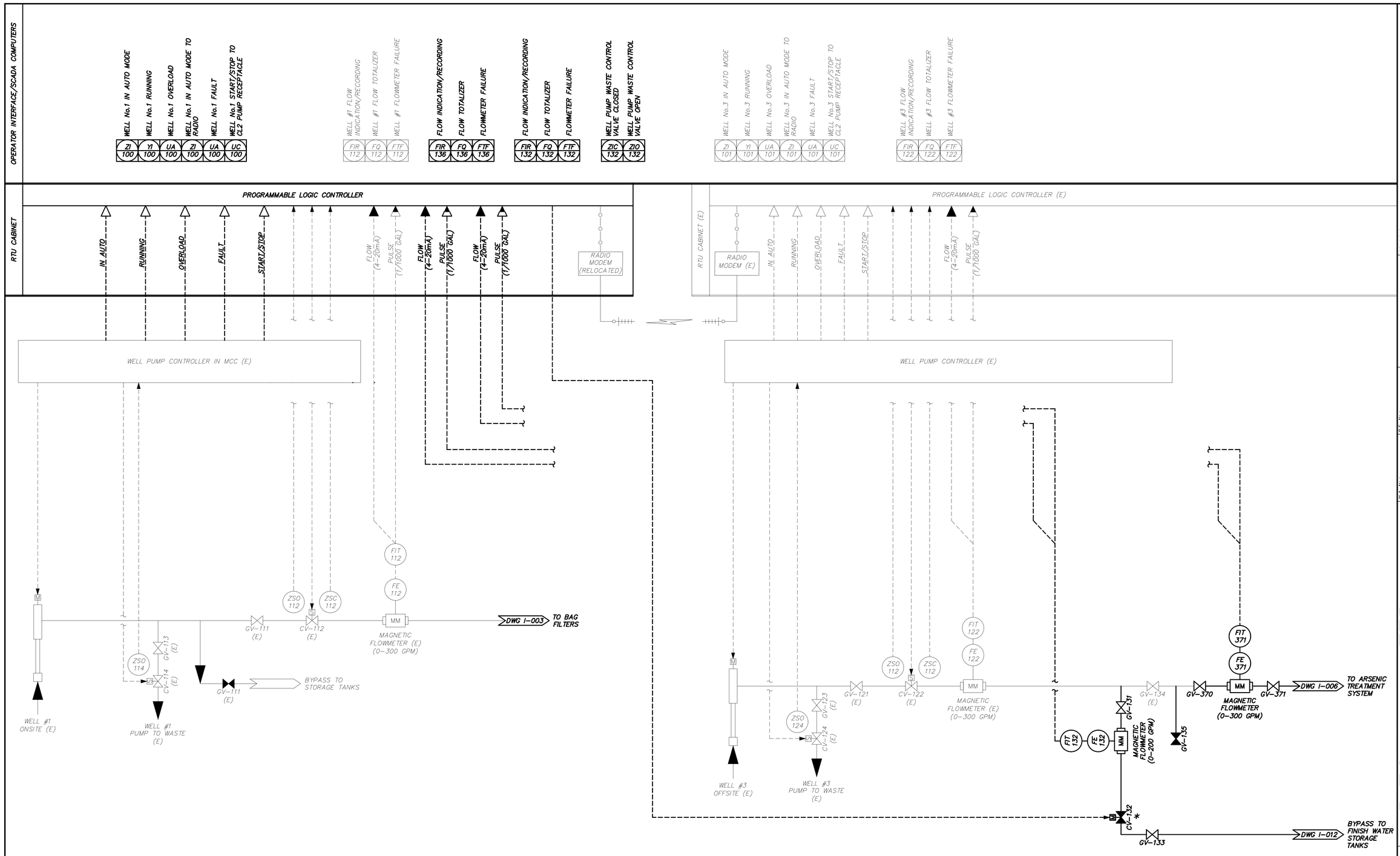

* DENOTES EQUIPMENT FURNISHED AS PART OF A PACKAGED SYSTEM

DARCOR ELECTRICAL CONSULTING ENGINEERS
22601 N. 17TH AVE. SUITE 140 PHOENIX, AZ 85027
Ph: (602) 795-2699 WWW.DARCORINC.COM

consor

REVISIONS:

NO	DATE	BY	DESCRIPTION
A	10/03/25	FT	30% SUBMITTAL
B	12/12/25	FT	60% SUBMITTAL
C	03/09/26	FT	90% SUBMITTAL

The Installation shown is to be Installed In accordance with the Arizona Water Company standard specifications on file with the Arizona Department of Environmental Quality

Revised Arizona 811 at least two full working days prior to any excavation. Call 811 or other Arizona811.com

W.A. No.:
SYSTEM:
LEGAL DESC.:
TAX DIST.:
DATE: 3/9/2026
DRAWN BY: MV
P.E. No.:
SB No.:
SCALE: N/A
REVIEWED BY: VC
CHECKED BY: JLG

ARIZONA WATER COMPANY
3805 N. BLACK CANYON HWY. POST OFFICE BOX 29006
PHOENIX, ARIZONA 85038-9006
(602) 240-6860

PROJECT DESC: STANFIELD GWS&T USBR GRANT COORDINATION
PROJECT SHEET DESC: P&ID - I

Registered Professional Engineer (Electrical) CERTIFICATE NO. 53839 JORGE GERARDO 3/9/26 Date Signed ARIZONA, U.S.A.

DWG. No.: I-002
SHEET 86 OF 98

Drawing Path and Name: Z:\2025\25028-Consor (AWC Stanfield Wells 1 &3 Arsenic and Nitrate Treatment)\Drawings\25028-I2.dwg, Plotted Date: March 9, 2026 6:56 PM By: Tobias J. Wiley

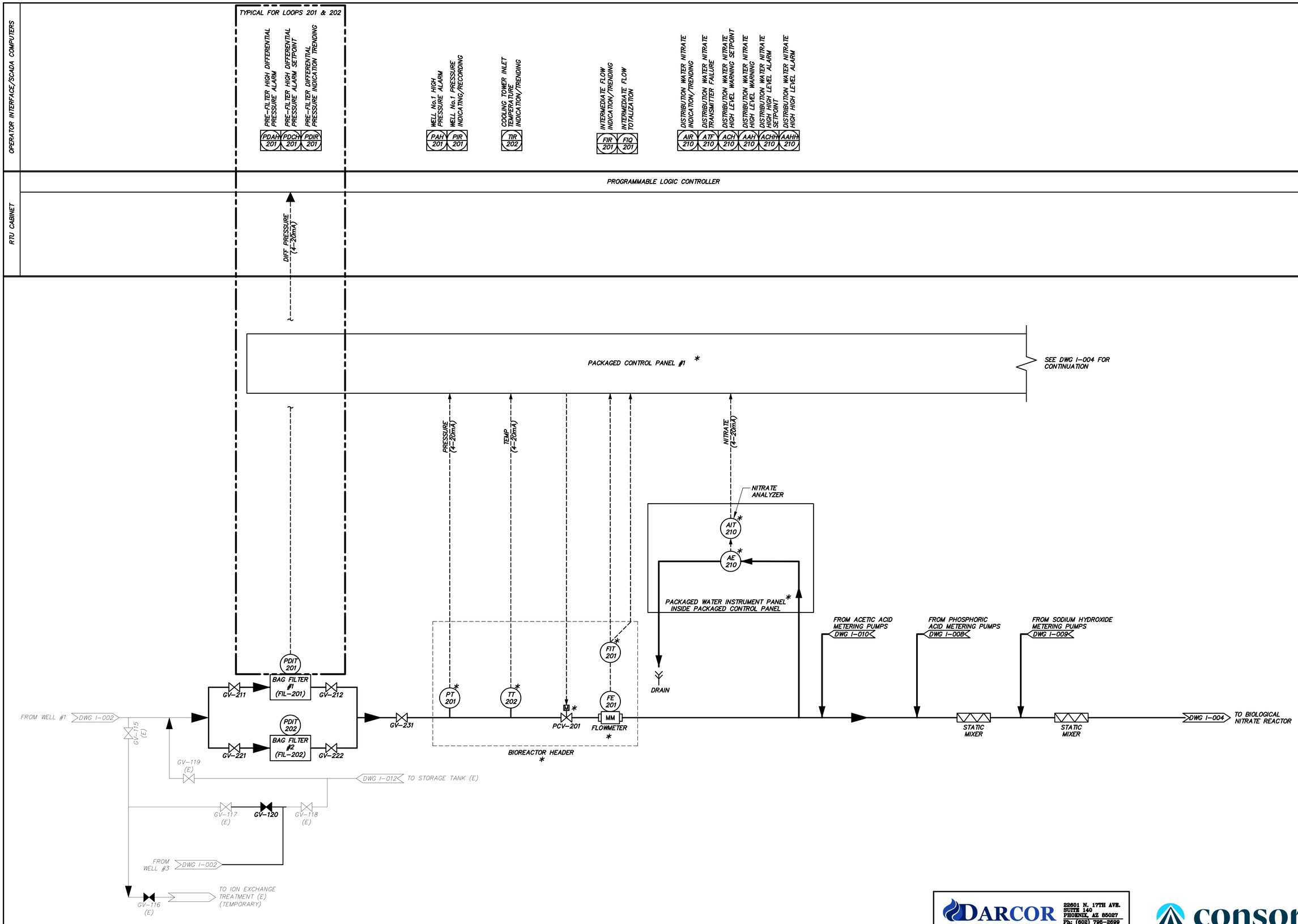

REVISIONS:			
NO	DATE	BY	DESCRIPTION
A	10/03/25	FT	30% SUBMITTAL
B	12/12/25	FT	60% SUBMITTAL
C	03/09/26	FT	90% SUBMITTAL

The Installation shown is to be Installed In accordance with the Arizona Water Company standard specifications on file with the Arizona Department of Environmental Quality

Revised Arizona BPS at least one hour. revised as shown and approved by the Arizona Department of Environmental Quality

Built BPS as other information shown.

W.A. No.:
SYSTEM:
LEGAL DESC.:
TAX DIST.:
DATE: 3/9/2026
DRAWN BY: MV
P.E. No.:
SB No.:
SCALE: N/A
REVIEWED BY: VC
CHECKED BY: JLG

ARIZONA WATER COMPANY
3805 N. BLACK CANYON HWY. POST OFFICE BOX 29006
PHOENIX, ARIZONA 85038-9006
(602) 240-6860

PROJECT DESC: STANFIELD GWS&T USBR GRANT COORDINATION
PROJECT SHEET DESC: P&ID - II

Registered Professional Engineer (Electrical) CERTIFICATE NO. 53839 JORGE GERARDO 3/9/26 Date Signed ARIZONA, U.S.A.

DWG. No.: I-003

SHEET 87 OF 98

DARCOR ELECTRICAL CONSULTING ENGINEERS
22601 N. 17TH AVE. SUITE 140 PHOENIX, AZ 85027 Ph: (602) 795-2699 WWW.DARCORINC.COM

consor

Drawing Path and Name: Z:\2025\25028-Consor (AWC Stanfield Wells 1 &3 Arsenic and Nitrate Treatment)\Drawings\25028-I3.dwg, Plotted Date: March 9, 2026 6:56 PM By: Tobias J. Wiley

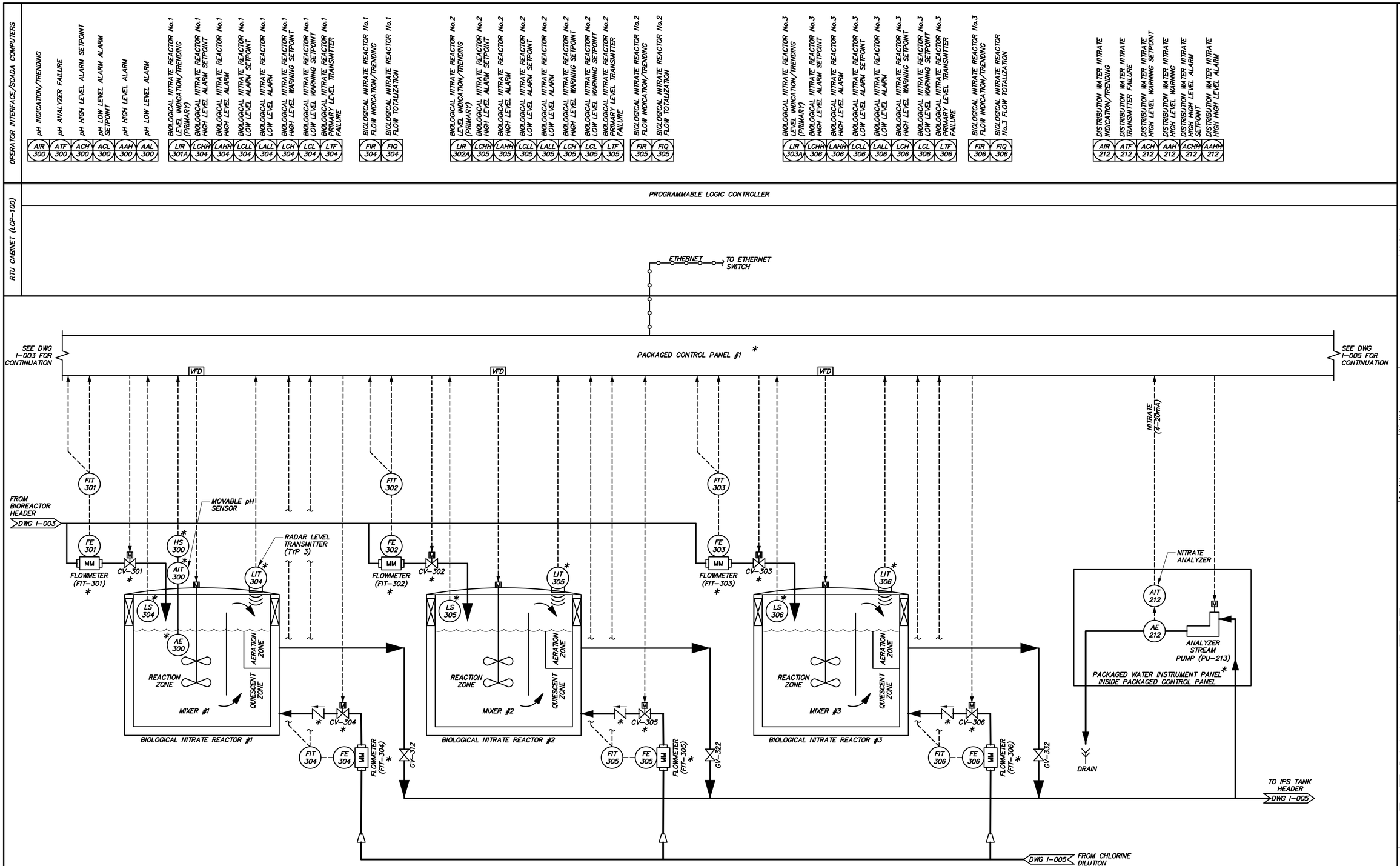

NOTE: SEE CIVIL/MECHANICAL PLANS FOR PIPING REQUIREMENTS FOR PACKAGED NITRATE REMOVAL FACILITY

* DENOTES EQUIPMENT FURNISHED AS PART OF A PACKAGED SYSTEM

DARCOR ELECTRICAL CONSULTING ENGINEERS
22601 N. 17TH AVE. SUITE 140 PHOENIX, AZ 85027
Ph: (602) 795-2699 WWW.DARCORINC.COM

consor

REVISIONS:

NO	DATE	BY	DESCRIPTION
A	10/03/25	FT	30% SUBMITTAL
B	12/12/25	FT	60% SUBMITTAL
C	03/09/26	FT	90% SUBMITTAL

The Installation shown is to be Installed In accordance with the Arizona Water Company standard specifications on file with the Arizona Department of Environmental Quality

Revised Arizona BPS #1 Based from 1988 revision of Uniform Plumbing Code, Section 1003.3.1.1 Backflow Prevention

Built 1993 or after (effective 01/01/2000)

W.A. No.: | P.E. No.:
SYSTEM#:
LEGAL DESC.:
TAX DIST.: | SIB No.:
DATE: 3/9/2026 | SCALE: N/A
DRAWN BY: MV | REVIEWED BY: VC | CHECKED BY: JLG

ARIZONA WATER COMPANY
3805 N. BLACK CANYON HWY. PHOENIX, ARIZONA 85039-8006
POST OFFICE BOX 29006
(602) 240-6860

PROJECT DESC: STANFIELD GWS&T USBR GRANT COORDINATION
PROJECT SHEET DESC: P&ID - III

Registered Professional Engineer (Electrical) CERTIFICATE NO. 53839 JORGE GERARDO 3/9/26 Date Signed ARIZONA U.S.A.

DWG. No.: I-004

SHEET 88 OF 98

Drawing Path and Name: Z:\2025\25028-Consor (AWC Stanfield Wells 1 &3 Arsenic and Nitrate Treatment)\Drawings\25028-I4.dwg, Plotted Date: March 9, 2026 6:56 PM By: Tobias J. Wiley

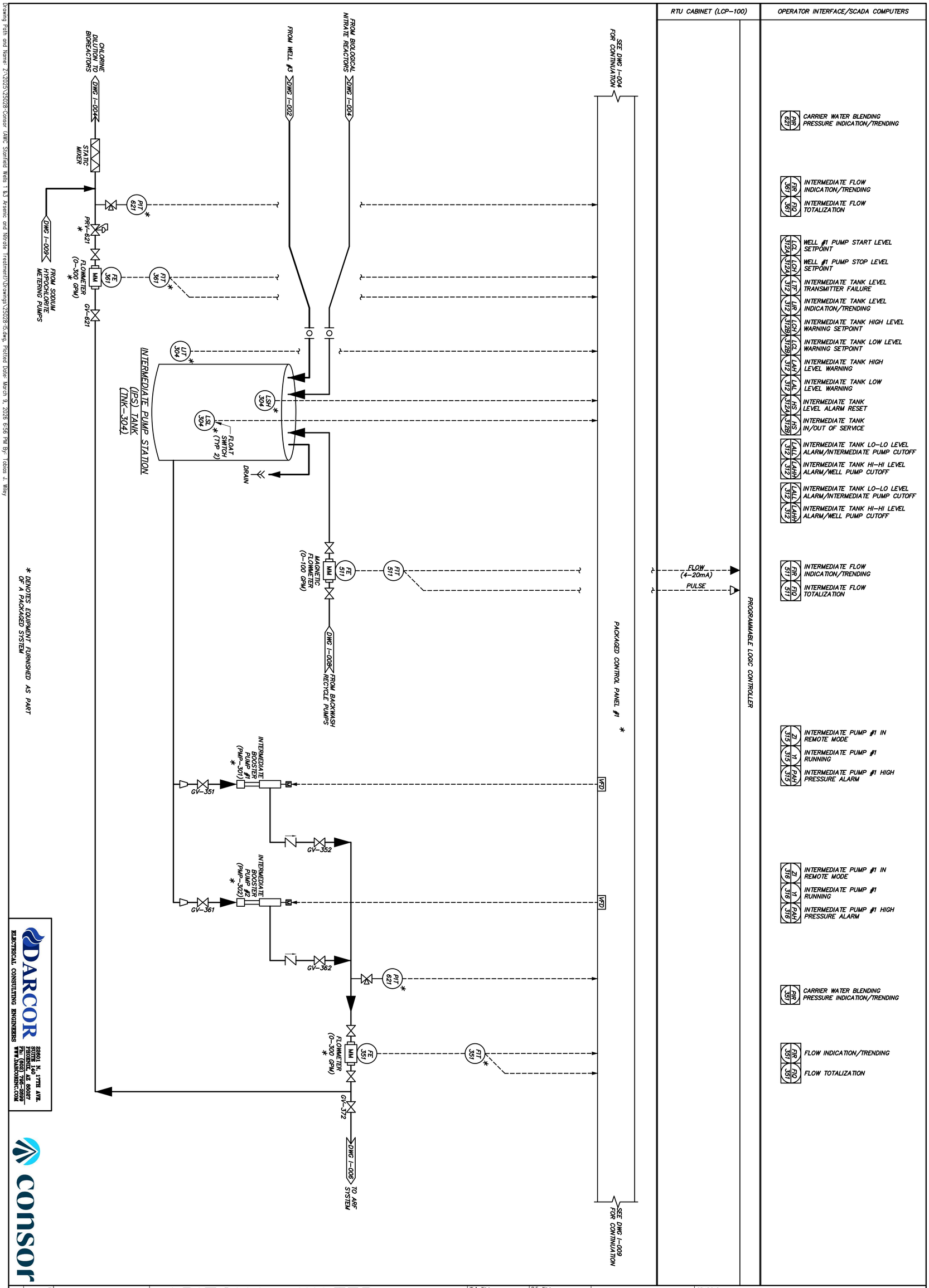

DARCOR
ELECTRICAL CONSULTING ENGINEERS
2801 N. 17TH AVE.
SUITE 140
PHOENIX, AZ 85027
PH: (602) 786-2609
WWW.DARCORINC.COM

consor

DWG. No.: I-005

SHEET 89 OF 98

Registered Professional Engineer
CERTIFICATE No. 33338
JORGE GERARDO
3/9/26
Registered Professional Engineer
Arizona U.S.A.

ARIZONA WATER COMPANY

3805 N. BLACK CANYON HWY. POST OFFICE BOX 29006
PHOENIX, ARIZONA 85038-9006
(602) 240-6860

PROJECT DESC: STANFIELD GWS&T USBR GRANT COORDINATION

PROJECT SHEET DESC: P&ID - IV

W.A. No.:	P.E. No.:
SYSTEM:	
LEGAL DESC.:	
TAX DIST.:	SIB No.:
DATE: 3/9/2026	SCALE: N/A
DRAWN BY: MV	REVIEWED BY: VC
CHECKED BY: JLG	

The installation shown is to be installed in accordance with the Arizona Water Company standard specifications on file with the Arizona Department of Environmental Quality

Contact Arizona 811 at least two full working days before you begin excavation
ARIZONA 811
Call 811 or click Arizona811.com

REVISIONS:

NO	DATE	BY	DESCRIPTION
A	10/03/25	FT	30% SUBMITTAL
B	12/12/25	FT	60% SUBMITTAL
C	03/09/26	FT	90% SUBMITTAL

Drawing Path and Name: Z:\2025\25028-Consor (AWC Stanfield Wells 1 &3 Arsenic and Nitrate Treatment)\Drawings\25028-I5.dwg, Plotted Date: March 9, 2026 6:56 PM By: Tobias J. Wiley

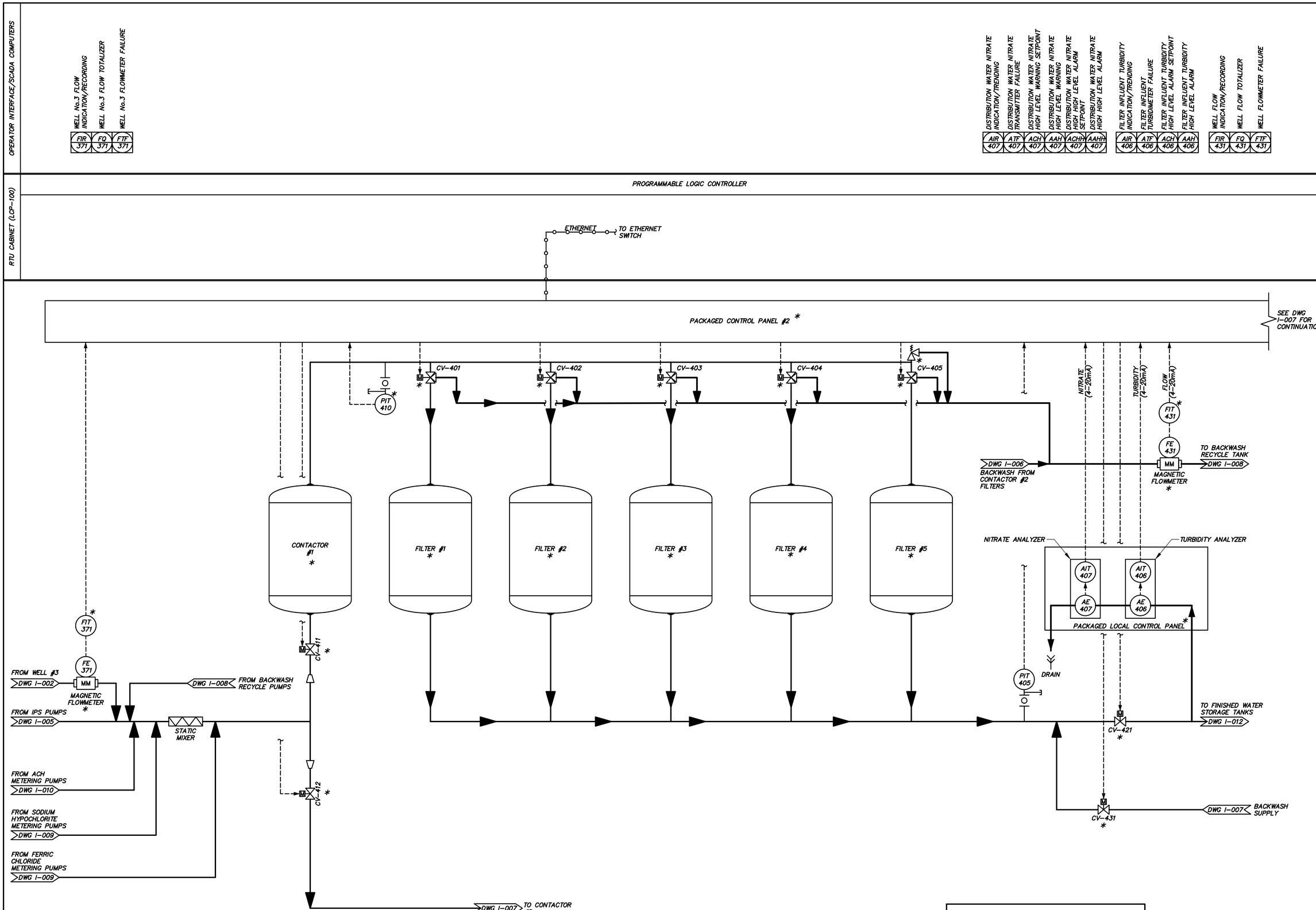

DARCOR ELECTRICAL CONSULTING ENGINEERS
22801 N. 17TH AVE. SUITE 140 PHOENIX, AZ 85027
Ph: (602) 795-2699 WWW.DARCORINC.COM

consor

REVISIONS:

NO	DATE	BY	DESCRIPTION
A	10/03/25	FT	30% SUBMITTAL
B	12/12/25	FT	60% SUBMITTAL
C	03/09/26	FT	90% SUBMITTAL

The Installation shown is to be Installed In accordance with the Arizona Water Company standard specifications on file with the Arizona Department of Environmental Quality

Revised as Shown on this Plan has been reviewed and found to be in accordance with the Arizona Department of Environmental Quality Rules and Regulations

W.A. No.:
P.E. No.:
SYSTEM:
LEGAL DESC.:
TAX DIST.:
SBB No.:
DATE: 3/9/2026
SCALE: N/A
DRAWN BY: MV
REVIEWED BY: VC
CHECKED BY: JLG

ARIZONA WATER COMPANY
3805 N. BLACK CANYON HWY. PHOENIX, ARIZONA 85038-8006
POST OFFICE BOX 29006
(602) 240-6860

PROJECT DESC.: STANFIELD GW&T USBR GRANT COORDINATION
PROJECT SHEET DESC.: P&ID - V

Registered Professional Engineer (Electrical) CERTIFICATE NO. 53839 JORGE GERARDO 3/9/26 Date Signed ARIZONA U.S.A.

DWG. No.: I-006
SHEET 90 OF 98

Drawing Path and Name: Z:\2025\25028-Consor (AWC Stanfield Wells 1 &3 Arsenic and Nitrate Treatment)\Drawings\25028-I6.dwg, Plotted Date: March 9, 2026 6:56 PM By: Tobias J. Wiley

OPERATOR INTERFACE/SCADA COMPUTERS

RTU CABINET

PROGRAMMABLE LOGIC CONTROLLER

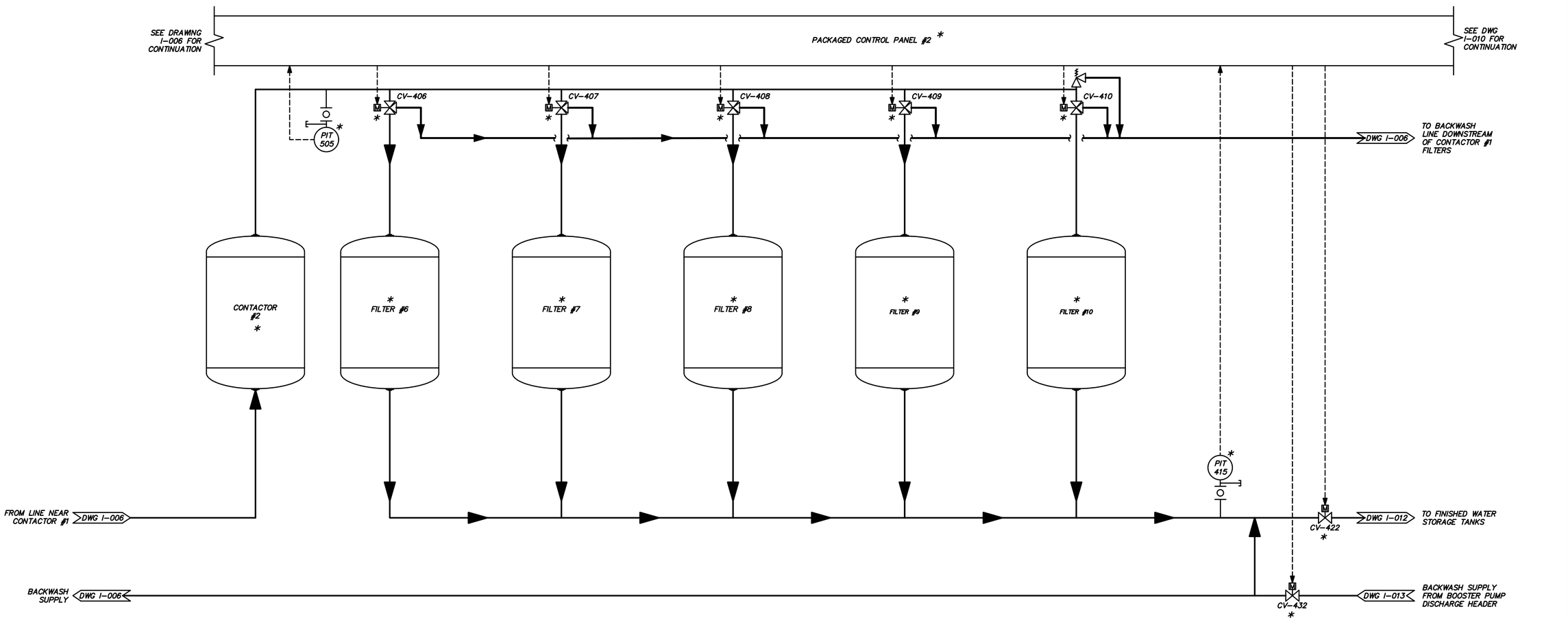

* DENOTES EQUIPMENT FURNISHED AS PART OF A PACKAGED SYSTEM

DARCOR ELECTRICAL CONSULTING ENGINEERS
22601 N. 17TH AVE. SUITE 140 PHOENIX, AZ 85027 Ph: (602) 795-2699 WWW.DARCORINC.COM

consor

REVISIONS:

NO	DATE	BY	DESCRIPTION
A	10/03/25	FT	30% SUBMITTAL
B	12/12/25	FT	60% SUBMITTAL
C	03/09/26	FT	90% SUBMITTAL

The Installation shown is to be Installed In accordance with the Arizona Water Company standard specifications on file with the Arizona Department of Environmental Quality

Revised Arizona BTS at least two full working days before you dig, excavate, or blast. Call (602) or (800) Arizona811.com

W.A. No.:
P.E. No.:
SYSTEM:
LEGAL DESC.:
TAX DIST.:
SIB No.:
DATE: 3/9/2026
SCALE: N/A
DRAWN BY: MV
REVIEWED BY: VC
CHECKED BY: JLG

ARIZONA WATER COMPANY
3805 N. BLACK CANYON HWY. POST OFFICE BOX 29006
PHOENIX, ARIZONA 85038-9006
(602) 240-6860

PROJECT DESC: STANFIELD GWS&T USBR GRANT COORDINATION

PROJECT SHEET DESC: P&ID - VI

Registered Professional Engineer (Electrical) CERTIFICATE NO. 53839 JORGE GERARDO 3/9/26 Date Signed ARIZONA U.S.A.

DWG. No.: I-007

Drawing Path and Name: Z:\2025\25028-Consor (AWC Stanfield Wells 1 &3 Arsenic and Nitrate Treatment)\Drawings\25028-I7.dwg, Plotted Date: March 9, 2026 6:57 PM By: Tobias J. Wiley

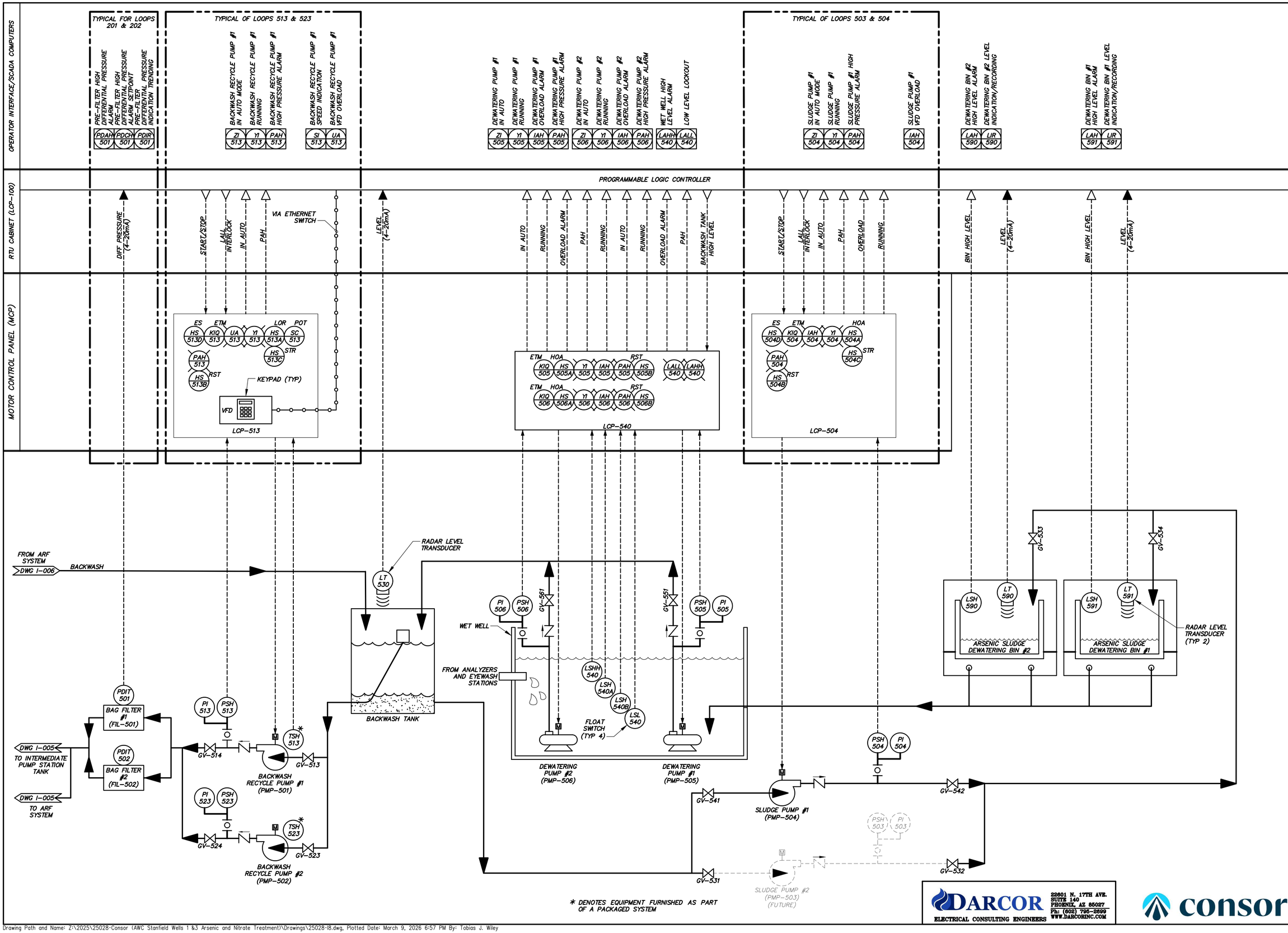

Drawing Path and Name: Z:\2025\25028-Consor (AWC Stanfield Wells 1 &3 Arsenic and Nitrate Treatment)\Drawings\25028-I8.dwg, Plotted Date: March 9, 2026 6:57 PM By: Tobias J. Wiley

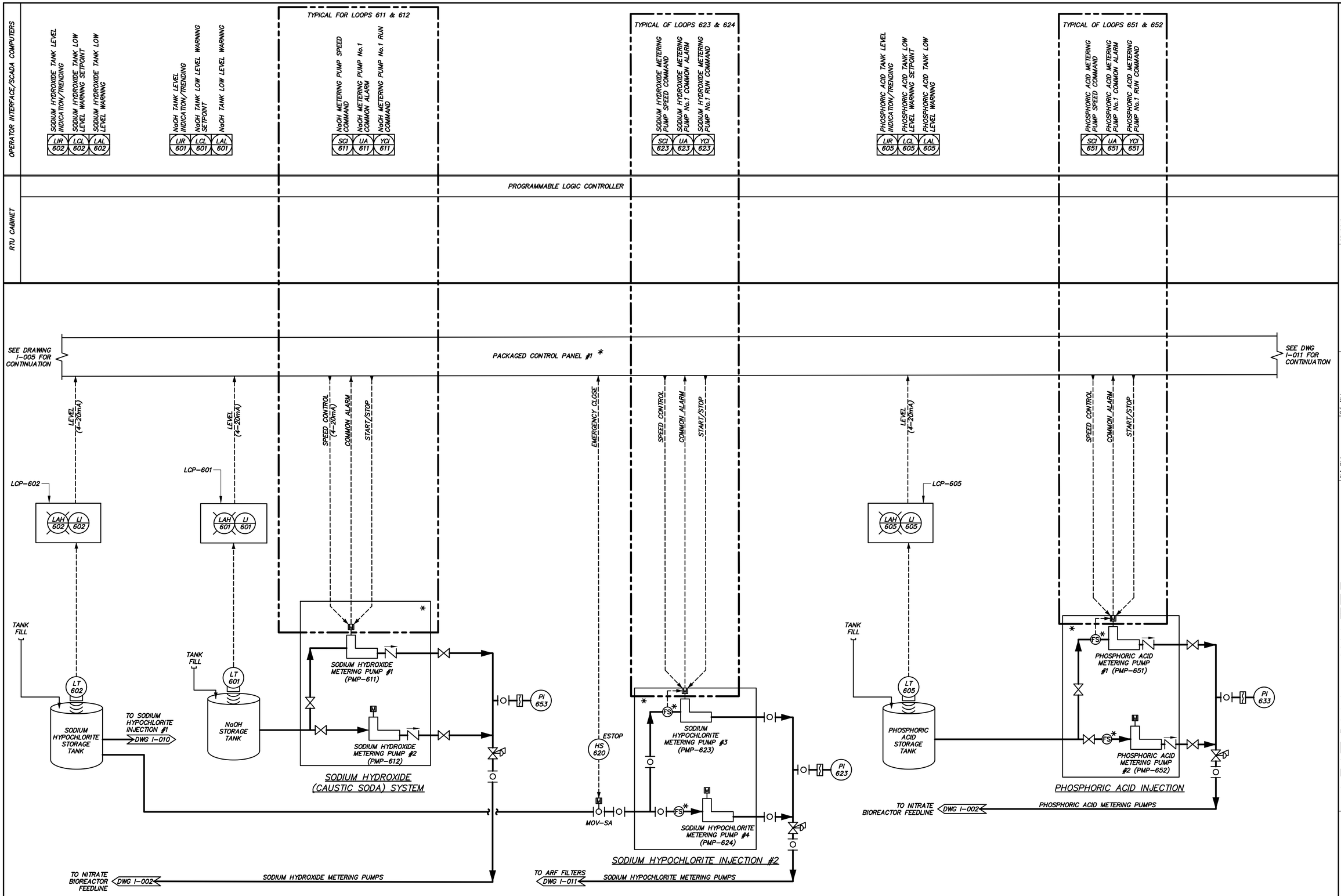

* DENOTES EQUIPMENT FURNISHED AS PART OF A PACKAGED SYSTEM

DARCOR ELECTRICAL CONSULTING ENGINEERS
22601 N. 17TH AVE. SUITE 140 PHOENIX, AZ 85027
Ph: (602) 795-2699 WWW.DARCORINC.COM

consor

REVISIONS:

NO	DATE	BY	DESCRIPTION
A	10/03/25	FT	30% SUBMITTAL
B	12/12/25	FT	60% SUBMITTAL
C	03/09/26	FT	90% SUBMITTAL

The Installation shown is to be Installed In accordance with the Arizona Water Company standard specifications on file with the Arizona Department of Environmental Quality

Revised in Arizona 2011 all based from 1998 revision, 1997 revision, and 1996 revision

Built 2011 or after (effective 01/1/2009)

W.A. No.: | P.E. No.:
SYSTEM:
LEGAL DESC.:
TAX DIST.: | SIB No.:
DATE: 3/9/2026 | SCALE: N/A
DRAWN BY: MV | REVIEWED BY: VC | CHECKED BY: JLG

ARIZONA WATER COMPANY
3805 N. BLACK CANYON HWY. POST OFFICE BOX 29006
PHOENIX, ARIZONA 85038-9006
(602) 240-6860

PROJECT DESC: STANFIELD GWS&T USBR GRANT COORDINATION
PROJECT SHEET DESC: P&ID - VIII

Registered Professional Engineer (Civil)
CERTIFICATE NO. 53839
JORGE GERARDO
Date Signed 3/9/26
ARIZONA U.S.A.

DWG. No.: I-009
SHEET 93 OF 98

Drawing Path and Name: Z:\2025\25028-Consor (AWC Stanfield Wells 1 &3 Arsenic and Nitrate Treatment)\Drawings\25028-I9.dwg, Plotted Date: March 9, 2026 6:57 PM By: Tobias J. Wiley

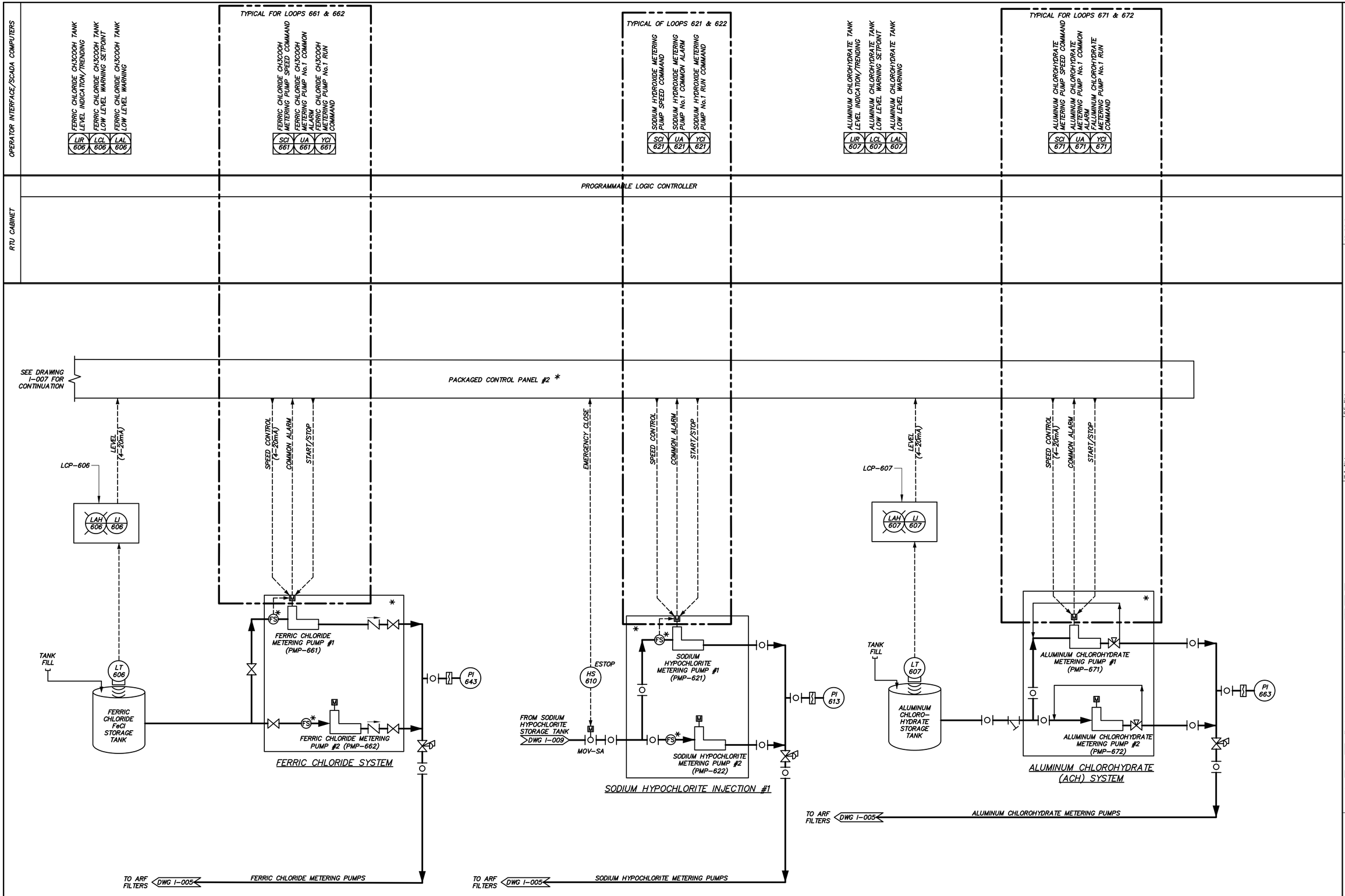

* DENOTES EQUIPMENT FURNISHED AS PART OF A PACKAGED SYSTEM

DARCOR ELECTRICAL CONSULTING ENGINEERS
22601 N. 17TH AVE.
SUITE 140
PHOENIX, AZ 85027
Ph: (602) 795-2699
WWW.DARCORINC.COM

consor

REVISIONS:

NO	DATE	BY	DESCRIPTION
A	10/03/25	FT	30% SUBMITTAL
B	12/12/25	FT	60% SUBMITTAL
C	03/09/26	FT	90% SUBMITTAL

The Installation shown is to be Installed In accordance with the Arizona Water Company standard specifications on file with the Arizona Department of Environmental Quality

Registered Professional Engineer (Civil) CERTIFICATE NO. 53839 JORGE GERARDO 3/9/26 Date Signed ARIZONA U.S.A.

W.A. No.:
P.E. No.:
SYSTEM:
LEGAL DESC.:
TAX DIST.:
SIB No.:
DATE: 3/9/2026
SCALE: N/A
DRAWN BY: MV
REVIEWED BY: VC
CHECKED BY: JLG

ARIZONA WATER COMPANY
3805 N. BLACK CANYON HWY. PHOENIX, ARIZONA 85039-8006
POST OFFICE BOX 29006
(602) 240-6860

PROJECT DESC: STANFIELD GWS&T USBR GRANT COORDINATION
PROJECT SHEET DESC: P&ID - IX

DWG. No.: I-010
SHEET 94 OF 98

Drawing Path and Name: Z:\2025\25028-Consor (AWC Stanfield Wells 1 &3 Arsenic and Nitrate Treatment)\Drawings\25028-110.dwg, Plotted Date: March 9, 2026 6:57 PM By: Tobias J. Wiley

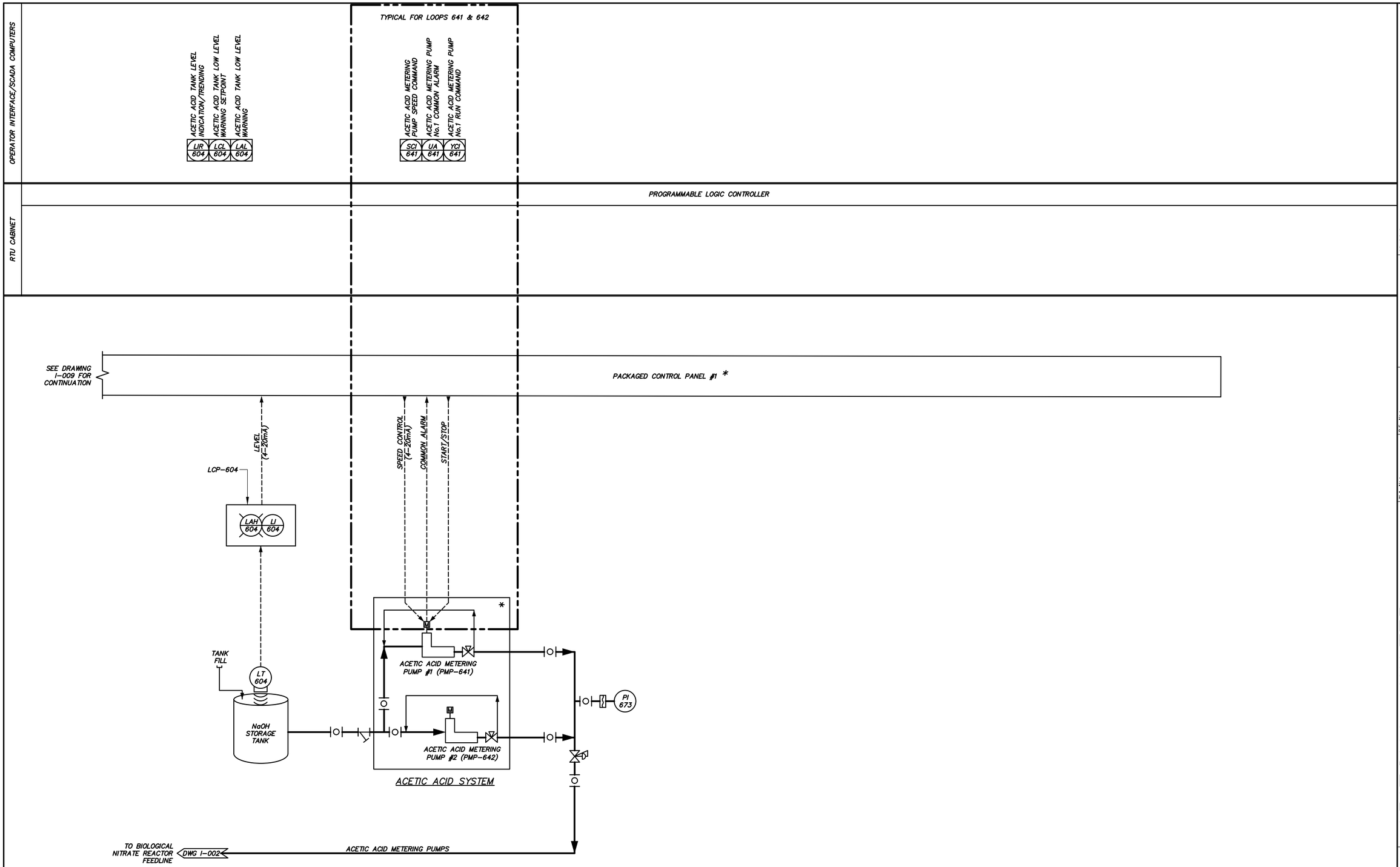

* DENOTES EQUIPMENT FURNISHED AS PART OF A PACKAGED SYSTEM

REVISIONS:

NO	DATE	BY	DESCRIPTION
A	10/03/25	FT	30% SUBMITTAL
B	12/12/25	FT	60% SUBMITTAL
C	03/09/26	FT	90% SUBMITTAL

The Installation shown is to be Installed In accordance with the Arizona Water Company standard specifications on file with the Arizona Department of Environmental Quality

Revised as Shown 2011 all Based from 1988 revision. Lines shown red are revisions.

Built 1988 or other information.

W.A. No.:
P.E. No.:
SYSTEM:
LEGAL DESC.:
TAX DIST.:
SIB No.:
DATE: 3/9/2026
SCALE: N/A
DRAWN BY: MV
REVIEWED BY: VC
CHECKED BY: JLG

ARIZONA WATER COMPANY
3805 N. BLACK CANYON HWY. POST OFFICE BOX 29006
PHOENIX, ARIZONA 85038-9006
(602) 240-6860

PROJECT DESC.: STANFIELD GWS&T USBR GRANT COORDINATION

PROJECT SHEET DESC.: P&ID - X

Registered Professional Engineer (Electrical)
CERTIFICATE NO. 53839
JORGE GERARDO
3/9/26
Date Signed
ARIZONA, U.S.A.

DWG. No.: I-011

SHEET 95 OF 98

DARCOR ELECTRICAL CONSULTING ENGINEERS
22601 N. 17TH AVE.
SUITE 140
PHOENIX, AZ 85027
Ph: (602) 795-2599
WWW.DARCORINC.COM

consor

Drawing Path and Name: Z:\2025\25028-Consor (AWC Stanfield Wells 1 &3 Arsenic and Nitrate Treatment)\Drawings\25028-111.dwg, Plotted Date: March 9, 2026 6:57 PM By: Tobias J. Wiley

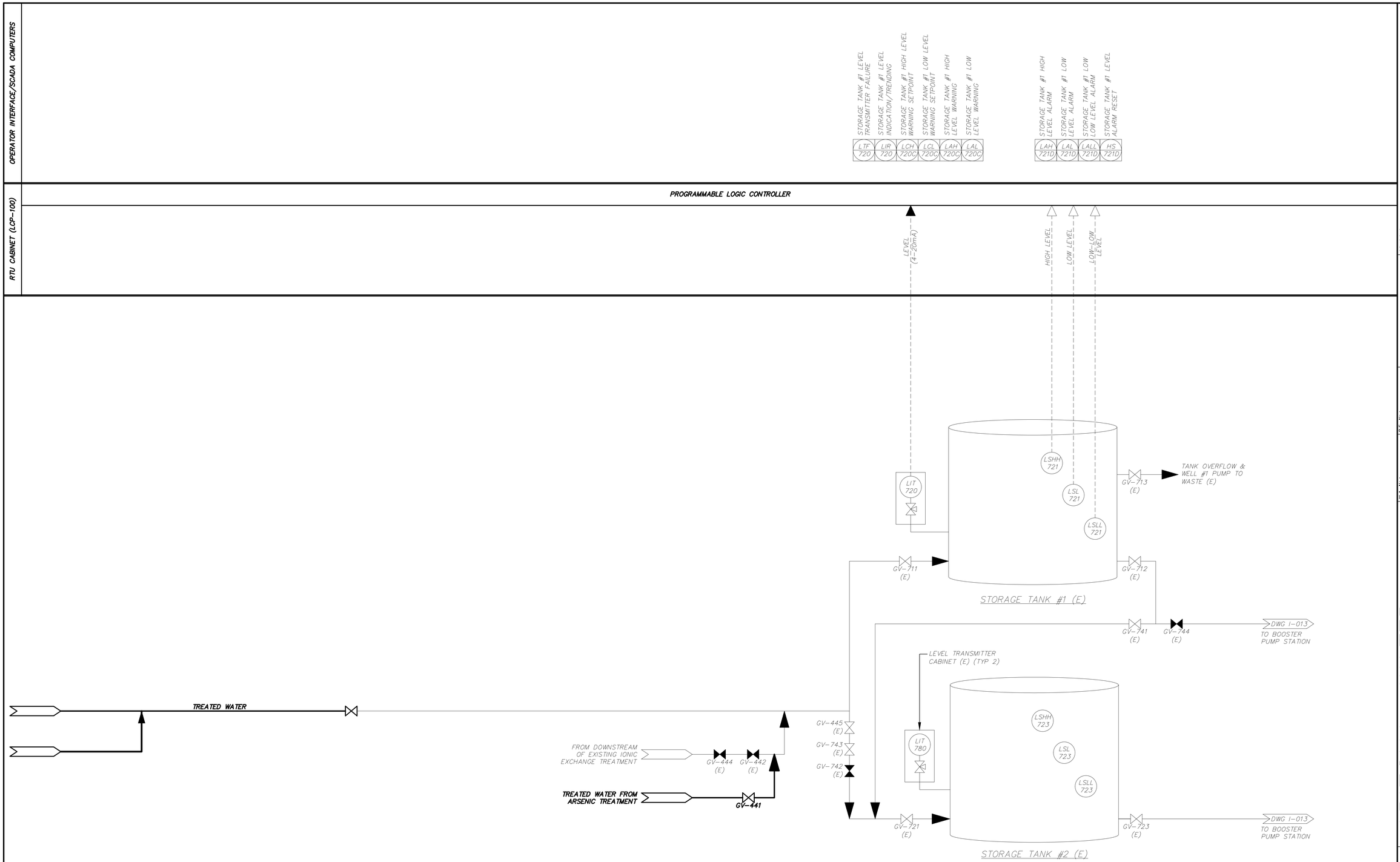

* DENOTES EQUIPMENT FURNISHED AS PART OF A PACKAGED SYSTEM

DARCOR ELECTRICAL CONSULTING ENGINEERS
22601 N. 17TH AVE.
SUITE 140
PHOENIX, AZ 85027
Ph: (602) 795-2599
WWW.DARCORINC.COM

consor

REVISIONS:

NO	DATE	BY	DESCRIPTION
A	10/03/25	FT	30% SUBMITTAL
B	12/12/25	FT	60% SUBMITTAL
C	03/09/26	FT	90% SUBMITTAL

The installation shown is to be Installed In accordance with the Arizona Water Company standard specifications on file with the Arizona Department of Environmental Quality

Required to Arizona 811 at least two full working days before you start your project. Call 811 or effect (Arizona811.com)

W.A. No.:
P.E. No.:
SYSTEM:
LEGAL DESC.:
TAX DIST.:
SIB No.:
DATE: 3/9/2026
SCALE: N/A
DRAWN BY: MV
REVIEWED BY: VC
CHECKED BY: JLG

ARIZONA WATER COMPANY
3805 N. BLACK CANYON HWY. POST OFFICE BOX 29006
PHOENIX, ARIZONA 85038-9006
(602) 240-6860

PROJECT DESC: STANFIELD GWS&T USBR GRANT COORDINATION
PROJECT SHEET DESC: P&ID - XI

Registered Professional Engineer (Civil) CERTIFICATE NO. 53839 JORGE GERARDO 3/9/26 Date Signed ARIZONA, U.S.A.

DWG. No.: I-012

Drawing Path and Name: Z:\2025\25028-Consor (AWC Stanfield Wells 1 &3 Arsenic and Nitrate Treatment)\Drawings\25028-112.dwg, Plotted Date: March 9, 2026 6:57 PM By: Tobias J. Wiley

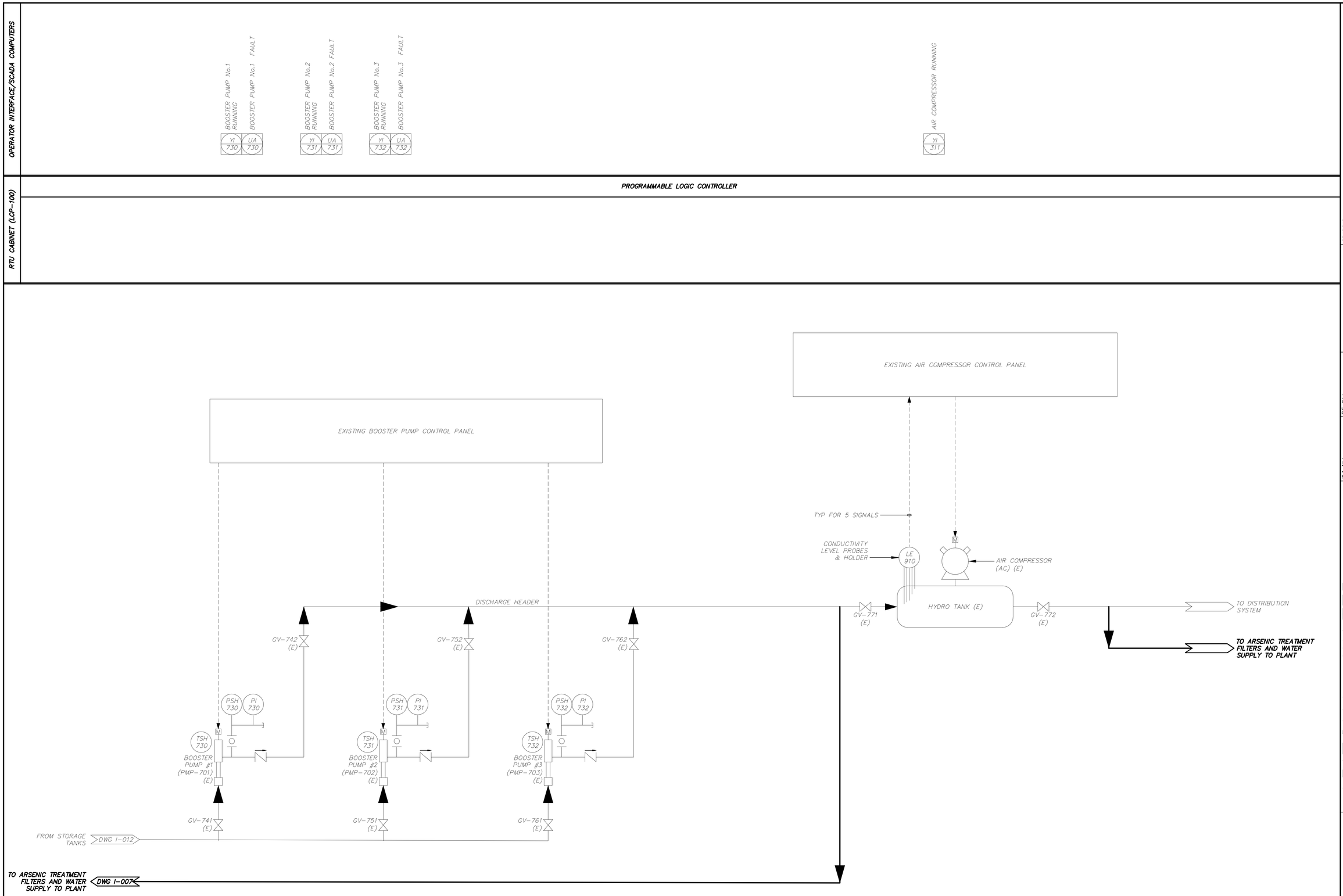

REVISIONS:

NO	DATE	BY	DESCRIPTION
A	10/03/25	FT	30% SUBMITTAL
B	12/12/25	FT	60% SUBMITTAL
C	03/09/26	FT	90% SUBMITTAL

The Installation shown is to be Installed In accordance with the Arizona Water Company standard specifications on file with the Arizona Department of Environmental Quality

Revised Arizona BTS at least one full working day before you start excavation.
Call 8(0)1 or other information(?) Arizona

W.A. No.:
P.E. No.:
SYSTEM:
LEGAL DESC.:
TAX DIST.:
SBB No.:
DATE: 3/9/2026
SCALE: N/A
DRAWN BY: MV
REVIEWED BY: VC
CHECKED BY: JLG

ARIZONA WATER COMPANY
3805 N. BLACK CANYON HWY. POST OFFICE BOX 29006
PHOENIX, ARIZONA 85038-9006
(602) 240-6860

PROJECT DESC: STANFIELD GWS&T USBR GRANT COORDINATION
PROJECT SHEET DESC: P&ID - XII

Registered Professional Engineer (Civil)
CERTIFICATE NO. 53839
JORGE GERARDO
3/9/26
Date Signed
ARIZONA U.S.A.

DWG. No.: I-013

DARCOR ELECTRICAL CONSULTING ENGINEERS
22601 N. 17TH AVE.
SUITE 140
PHOENIX, AZ 85027
Ph: (602) 795-2699
WWW.DARCORINC.COM

consor

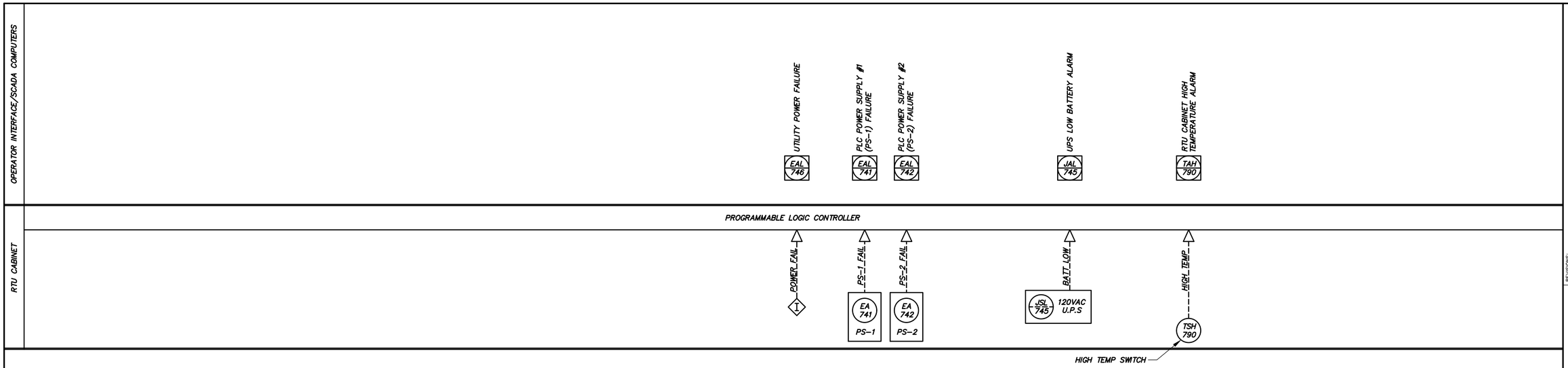

REVISIONS:

NO	DATE	BY	DESCRIPTION
A	10/03/25	FT	30% SUBMITTAL
B	12/12/25	FT	60% SUBMITTAL
C	03/09/26	FT	90% SUBMITTAL

The Installation shown is to be Installed In accordance with the Arizona Water Company standard specifications on file with the Arizona Department of Environmental Quality

Received & Stamp BY: at least two full working days prior to start of excavation
Call 8(0)1 or dial (8(0)0)782-5348

W.A. No.:
P.E. No.:
SYSTEM:
LEGAL DESC.:
TAX DIST.:
SIB No.:
DATE: 3/9/2026
SCALE: N/A
DRAWN BY: MV
REVIEWED BY: VC
CHECKED BY: JLG

ARIZONA WATER COMPANY
3805 N. BLACK CANYON HWY. POST OFFICE BOX 29006
PHOENIX, ARIZONA 85038-9006
(602) 240-6860

PROJECT DESC: STANFIELD GWS&T USBR GRANT COORDINATION

PROJECT SHEET DESC: P&ID - XIII

Registered Professional Engineer (Civil)
CERTIFICATE NO. 53839
JORGE GERARDO
3/9/26
Date Signed
ARIZONA, U.S.A.

DWG. No.: I-014

SHEET OF 98

DARCOR ELECTRICAL CONSULTING ENGINEERS
22601 N. 17TH AVE.
SUITE 140
PHOENIX, AZ 85027
Ph: (602) 795-2699
WWW.DARCORINC.COM

consor

Drawing Path and Name: Z:\2025\25028-Consor (AWC Stanfield Wells 1 &3 Arsenic and Nitrate Treatment)\Drawings\25028-I14.dwg, Plotted Date: March 9, 2026 6:57 PM By: Tobias J. Wiley

ARIZONA WATER COMPANY

SPECIFICATIONS

GENERAL CONDITIONS OF CONTRACT: E-4-1
NOVEMBER 1, 2024 – 2 YEAR

CONSTRUCTION SPECIFICATIONS: E-8-1
NOVEMBER 30, 2017

STANDARD SPECIFICATION DRAWINGS: E-9-1
2010

A copy of this entire Spec Book was provided with Invitation to Bid Package for: 3-7386 Stanfield Nitrate and Arsenic Removal Facility on